CONVERSION
Mean Low Tide (MLT) –to–
Mean Lower Low Water (MLLW)

Chris Frabotta
Deputy Chief, Operations Division
Chief, Navigation Branch
Galveston District - Southwestern Division
February 6, 2014

US Army Corps of Engineers
BUILDING STRONG®

AGENDA

- Partnership with Texas A&M University at Corpus Christi & TCOON.
- What is Mean Low Tide (MLT) ?
- What is Mean Lower Low Water (MLLW) ?
- Why the Transition to MLLW ?
- How does the conversion impact our navigation stakeholders ?
- Implementation of conversion ?

MEAN LOW TIDE (MLT) TO MEAN LOWER LOW WATER (MLLW)

0 MLT

MEAN LOW TIDE (MLT) TO MEAN LOWER LOW WATER (MLLW)

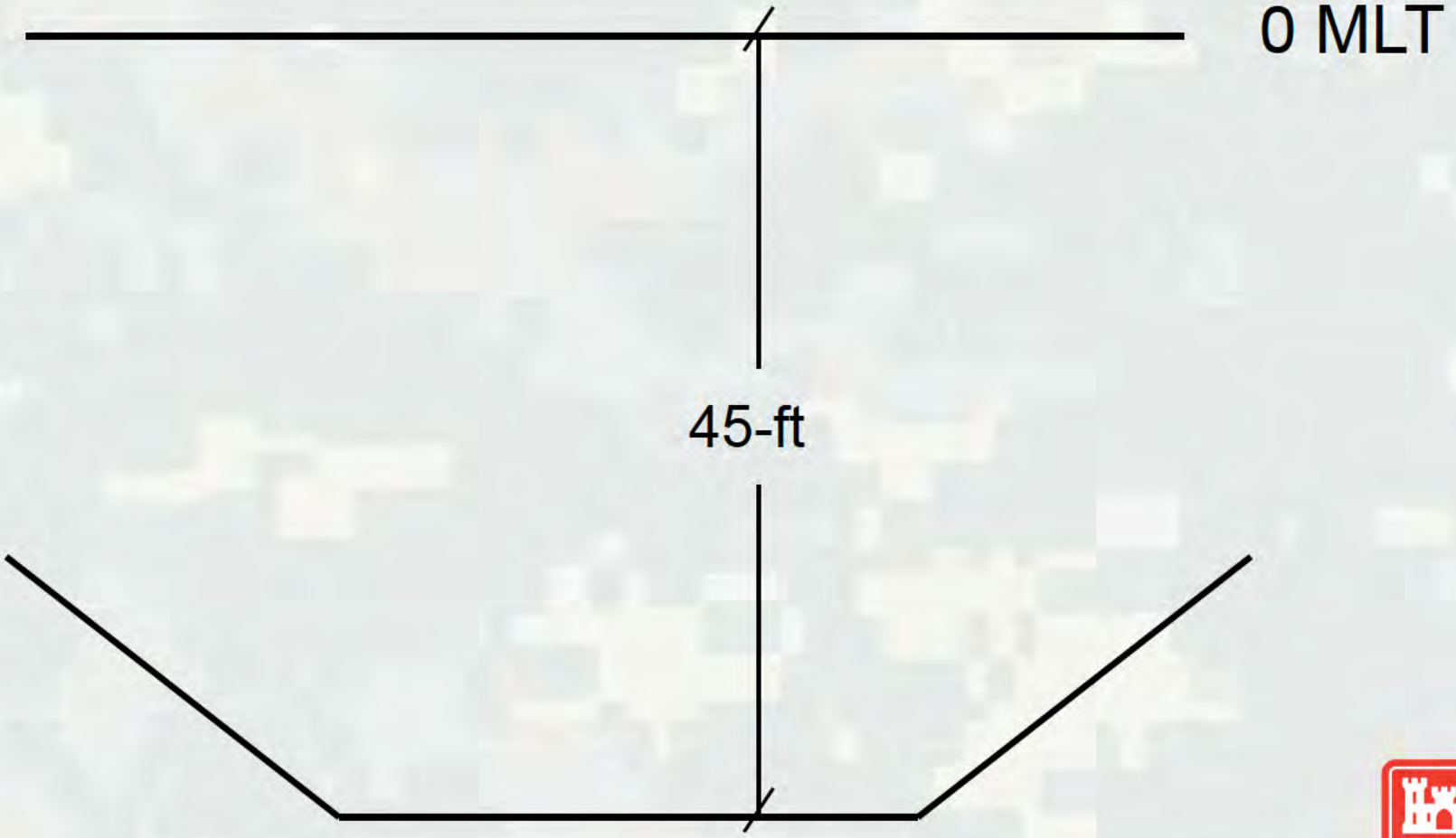

MEAN LOW TIDE (MLT)

- Galveston District using Mean Low Tide (MLT) as vertical datum control for navigation projects
- MLT in the context of District projects is a legacy datum dating from the 1960's and is ***geodetically*** tied to terrestrial benchmarks (NGVD 29, NAVD 88)
- At inception, MLT was ***empirically*** and ***subjectively*** derived and represented the lowest expected water level including ***both*** astronomical and meteorological forcing.

MEAN LOW TIDE (MLT) TO MEAN LOWER LOW WATER (MLLW)

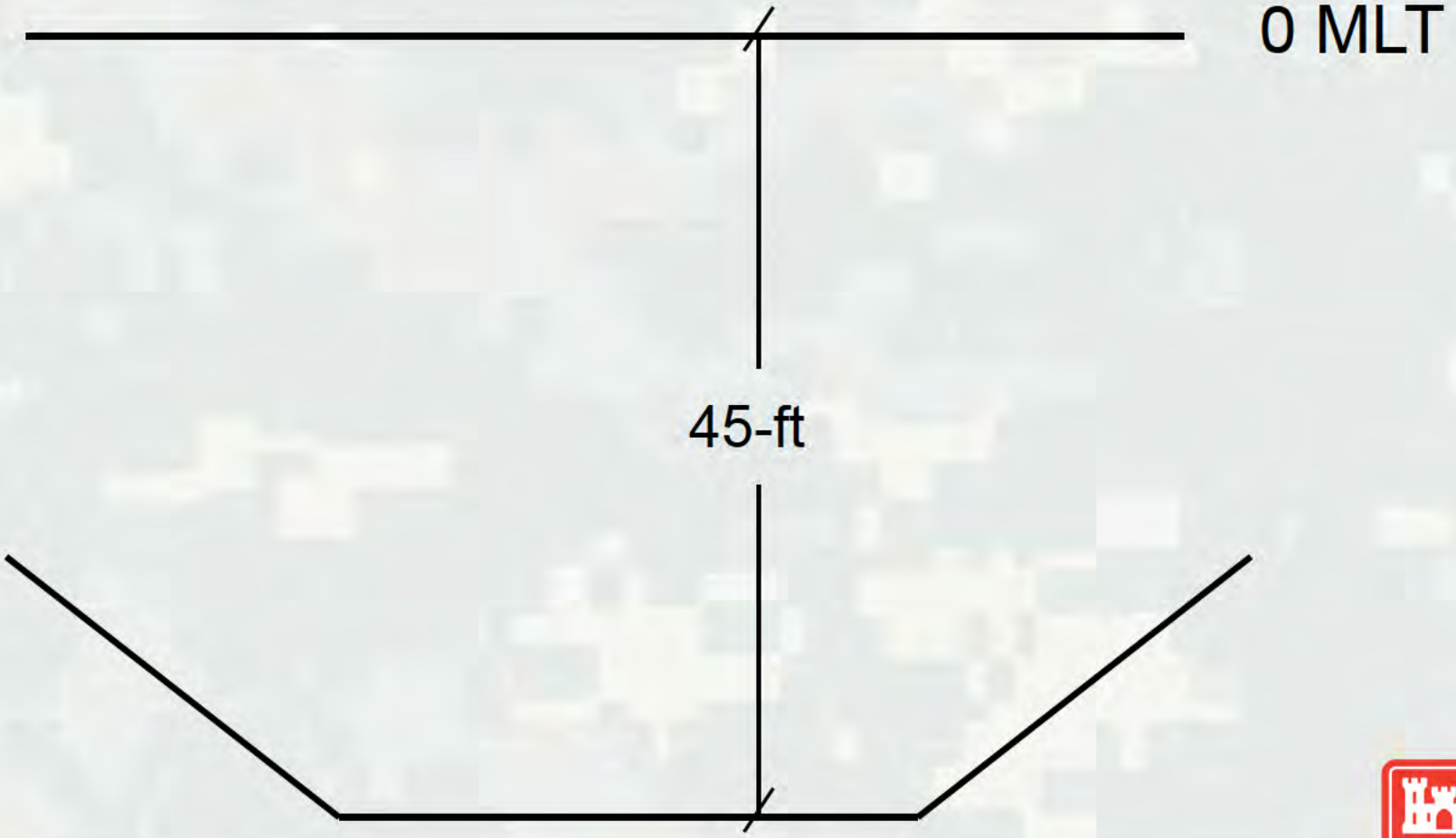

MEAN LOW TIDE (MLT) TO MEAN LOWER LOW WATER (MLLW)

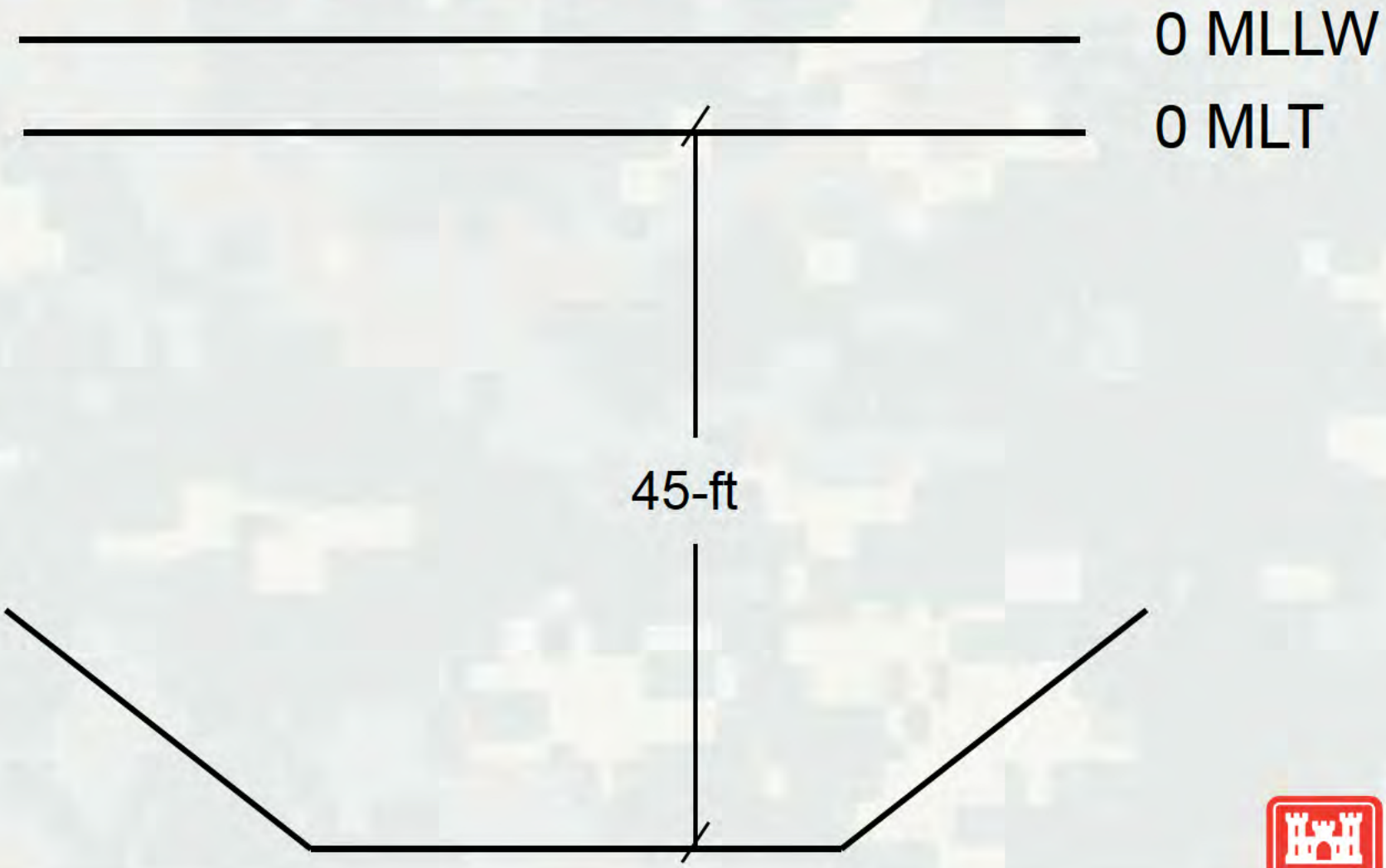

MEAN LOW TIDE (MLT) TO MEAN LOWER LOW WATER (MLLW)

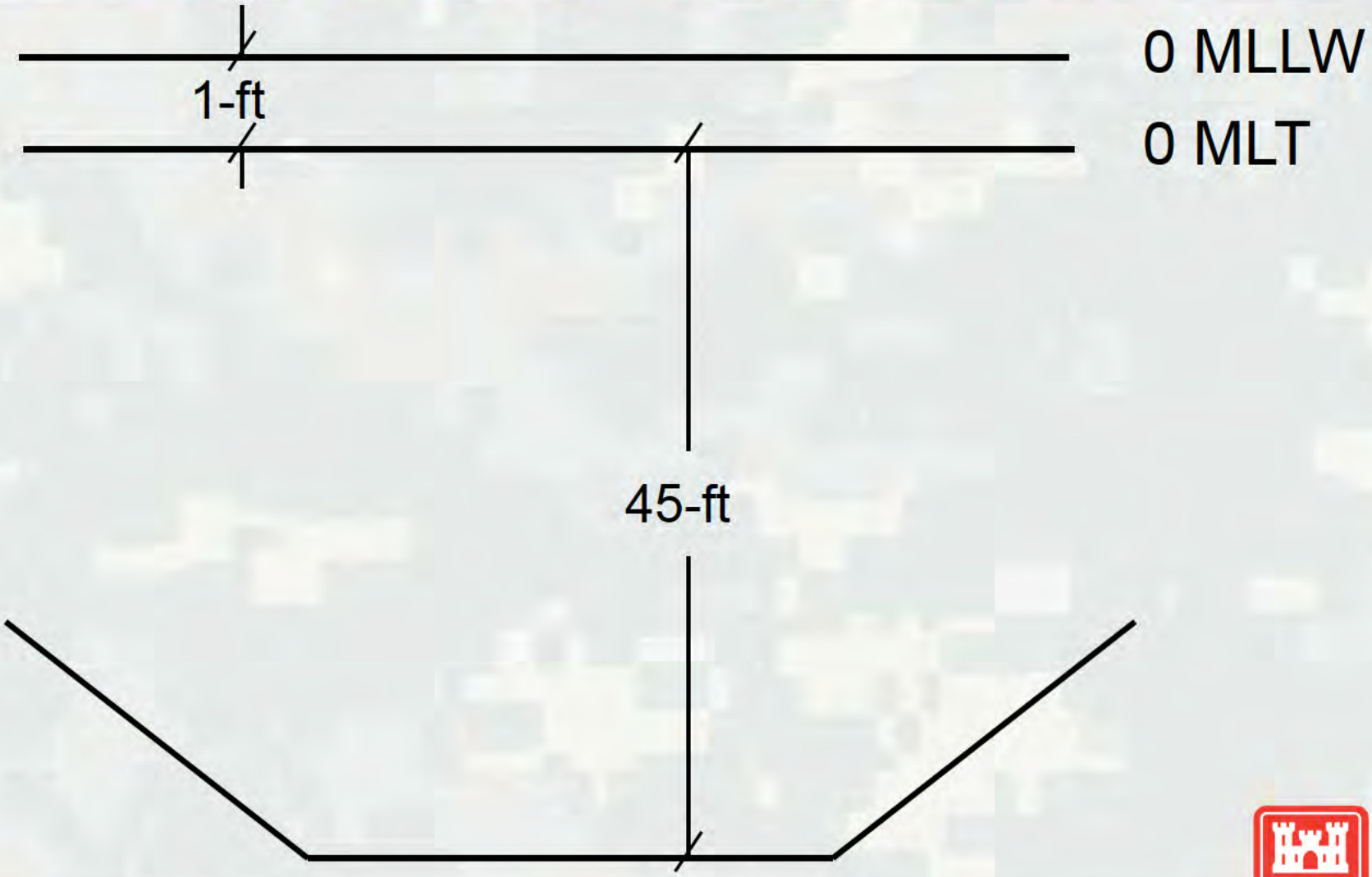

MEAN LOWER LOW WATER (MLLW)

- The arithmetic mean of the lower low water (MLLW) heights of the tide observed over a specific 19-year Metonic cycle (the NTDE). Only the lower low water of each pair of low waters of a tidal day is included in the mean.
- It is the depth (sounding) datum used on NOAA nautical charts; and internationally recognized.
- It is the ***average*** minimum ***tidal*** depth likely to be encountered by maritime operators.

MEAN LOW TIDE (MLT) TO MEAN LOWER LOW WATER (MLLW)

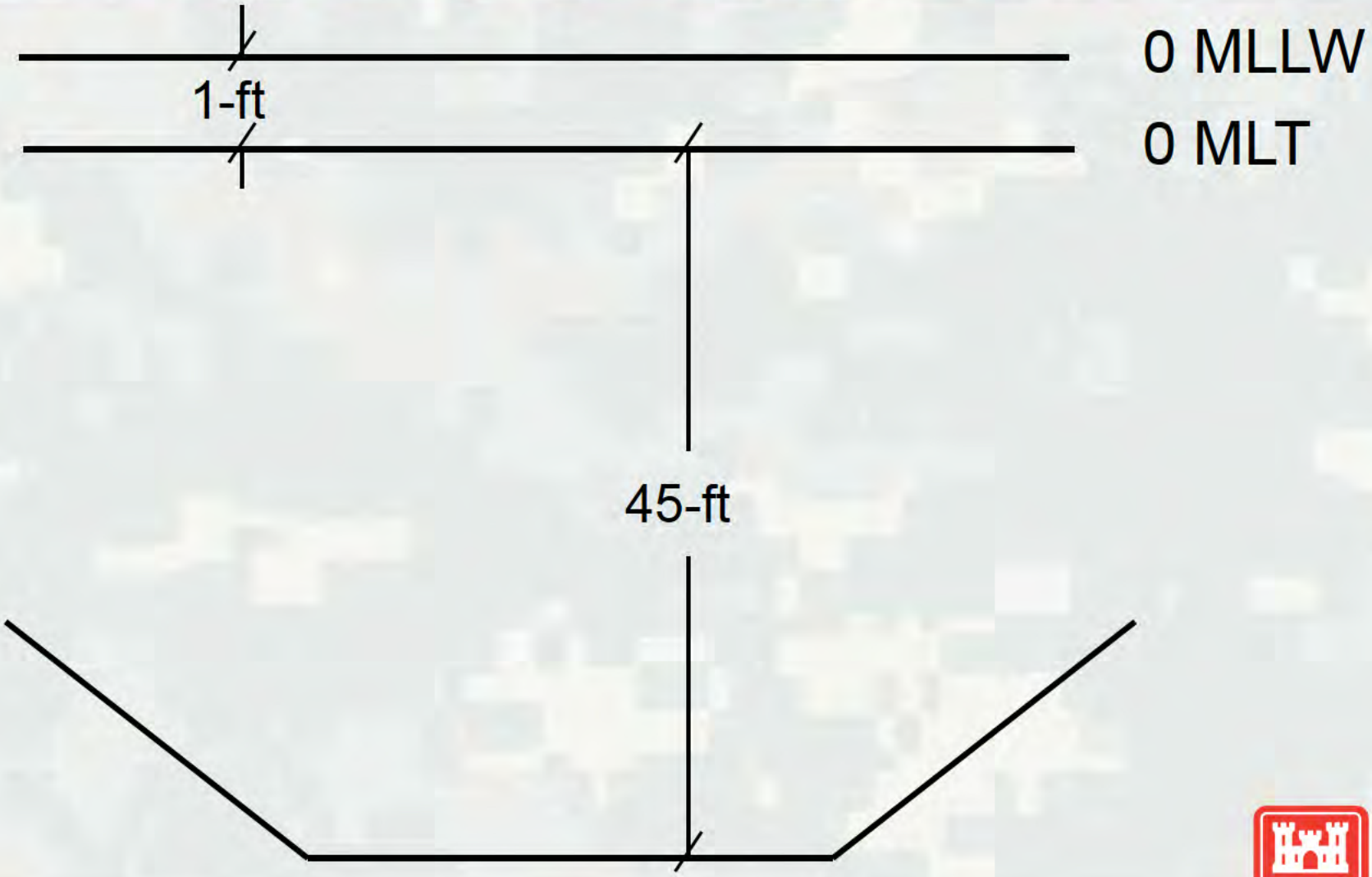

MEAN LOW TIDE (MLT) TO MEAN LOWER LOW WATER (MLLW)

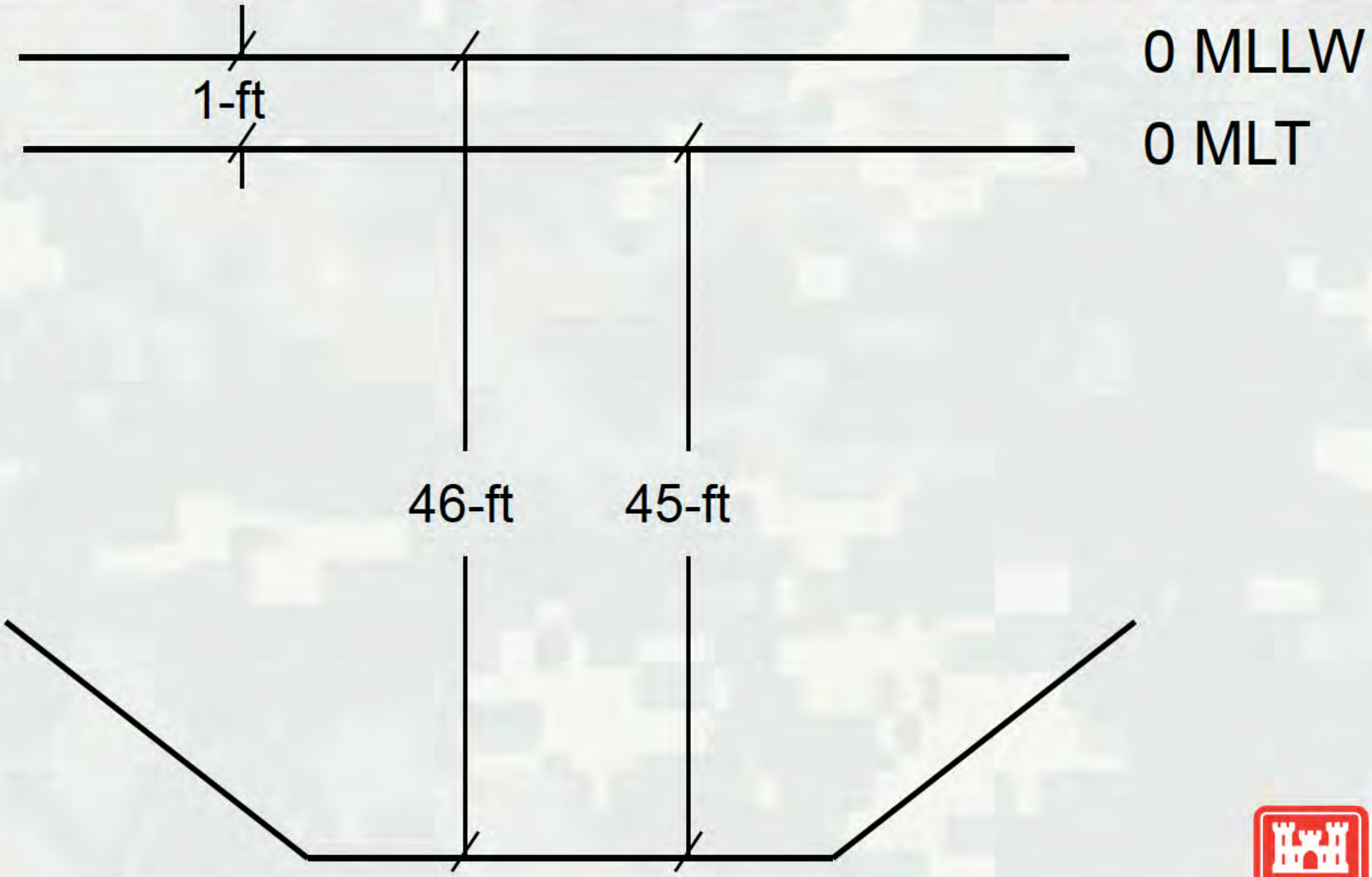

Policy Implications on Vertical Datum Conversion

Galveston District submitted at White Paper though Division HQ to USACE-HQ

Requesting:

- To maintain Project's "Effective Depth" (i.e. the same depth we are maintaining now)
- Exception to 50-50% (Fed-NonFed Cost Share)

EXAMPLE #1

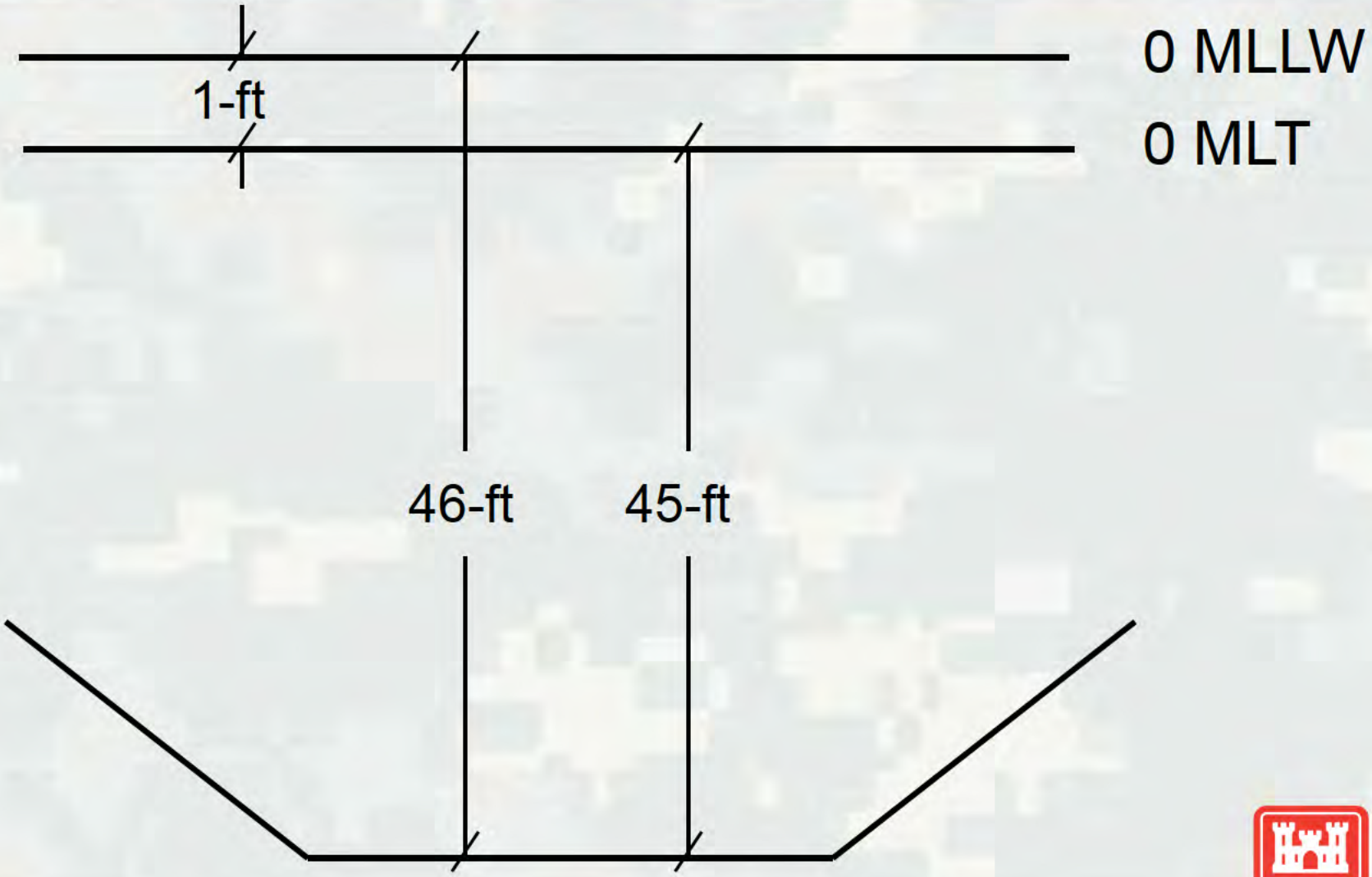

EXAMPLE #1

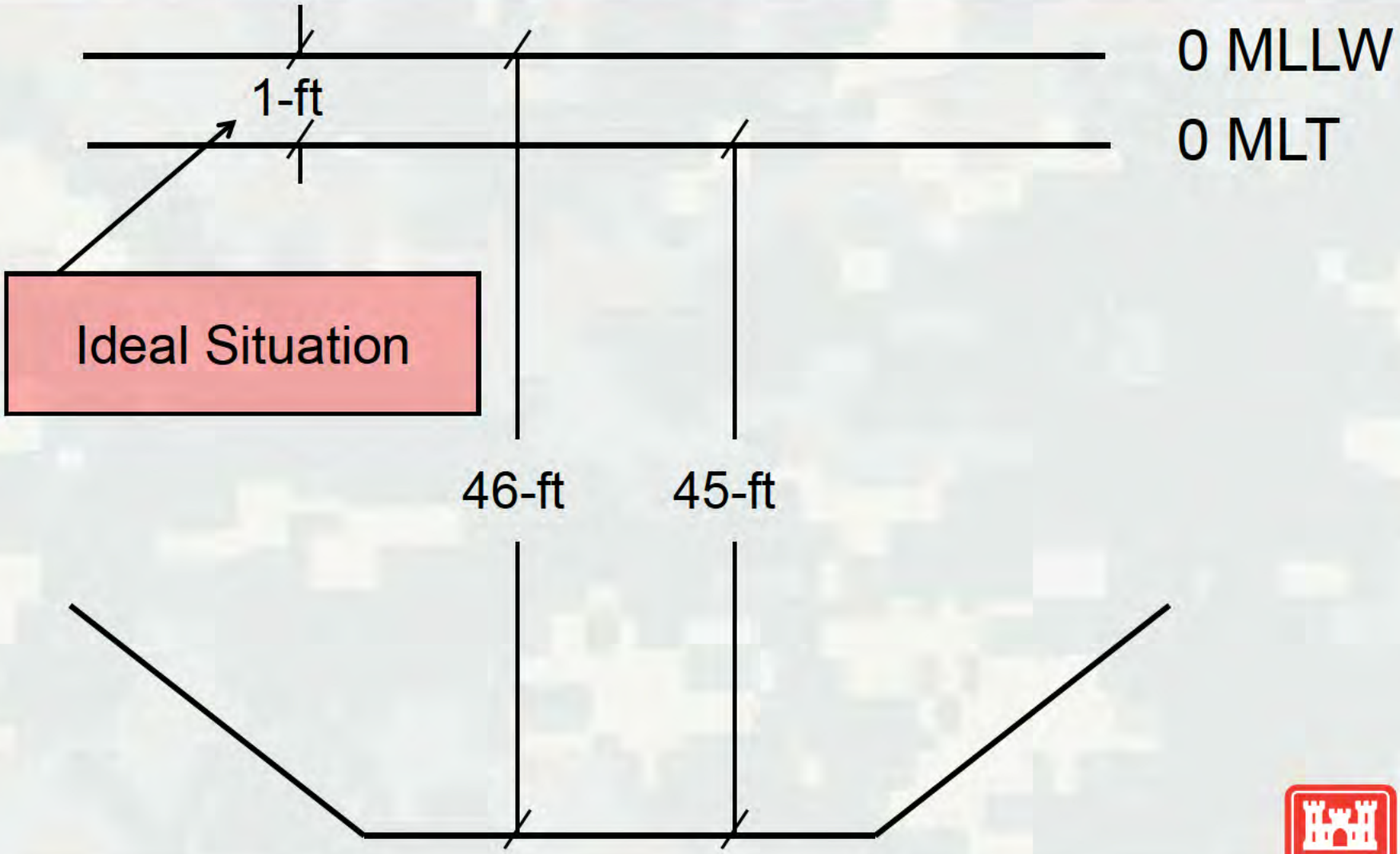

EXAMPLE #1

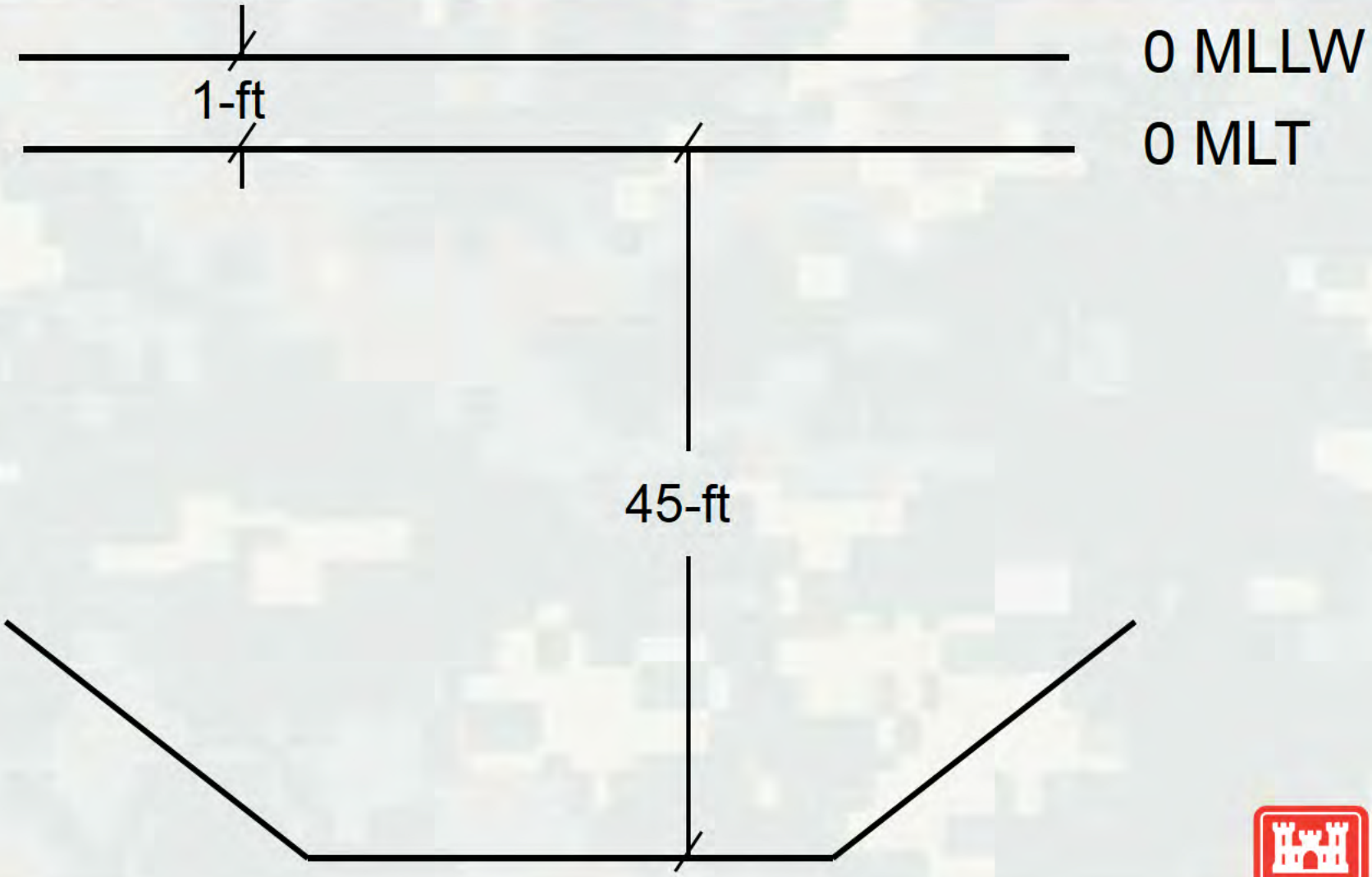

EXAMPLE #2

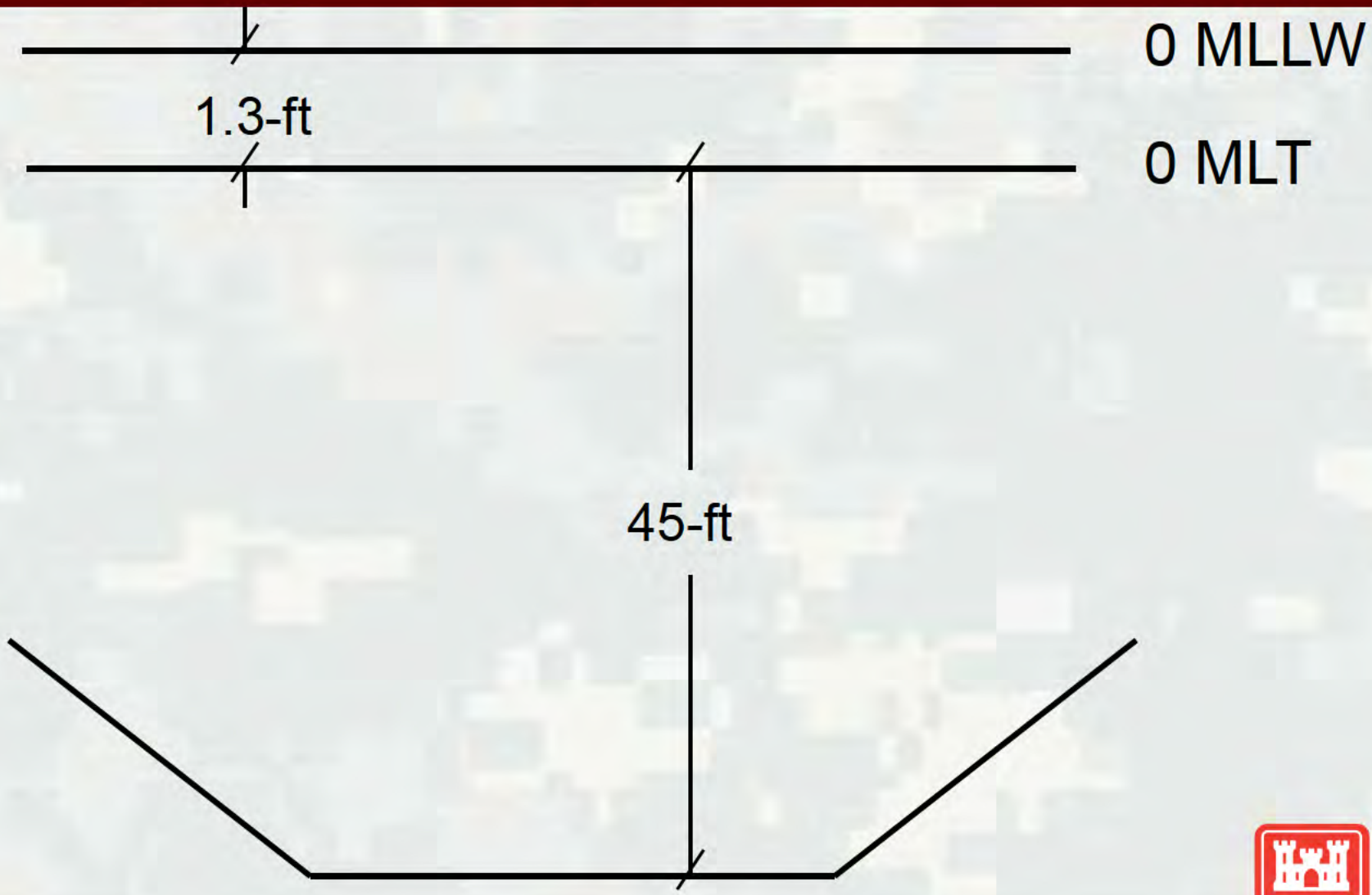

EXAMPLE #2

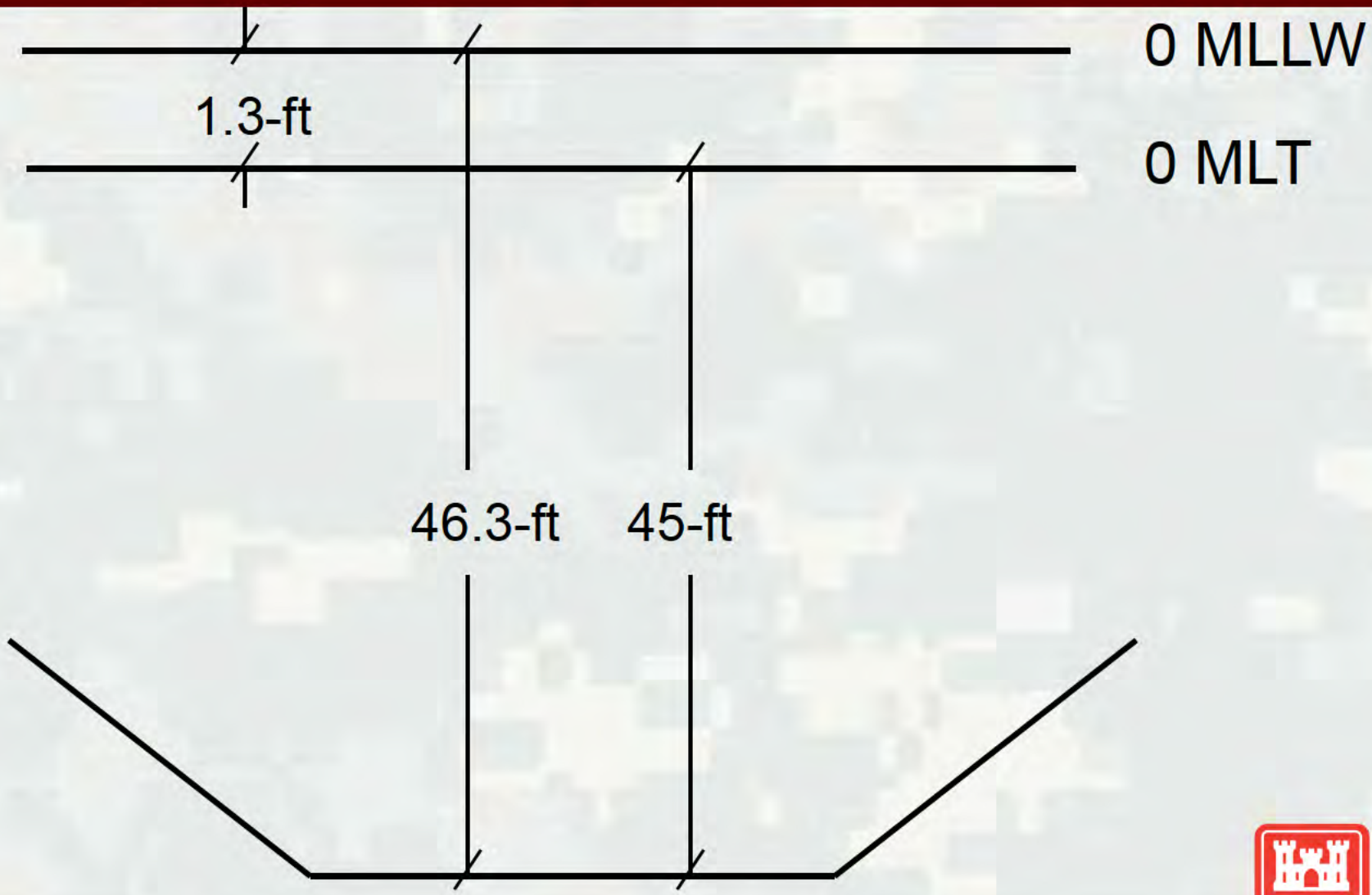

EXAMPLE #2

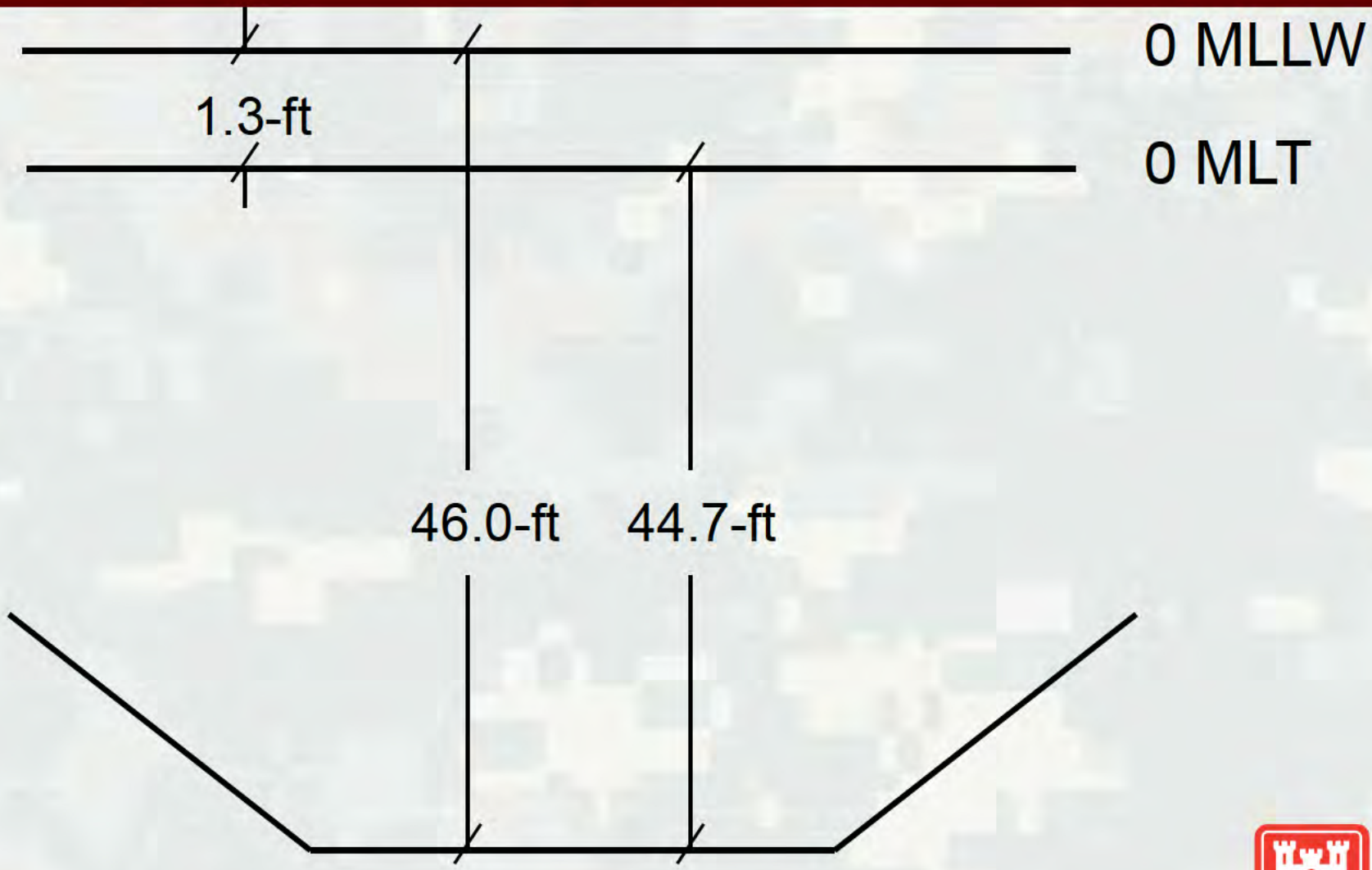

EXAMPLE #1

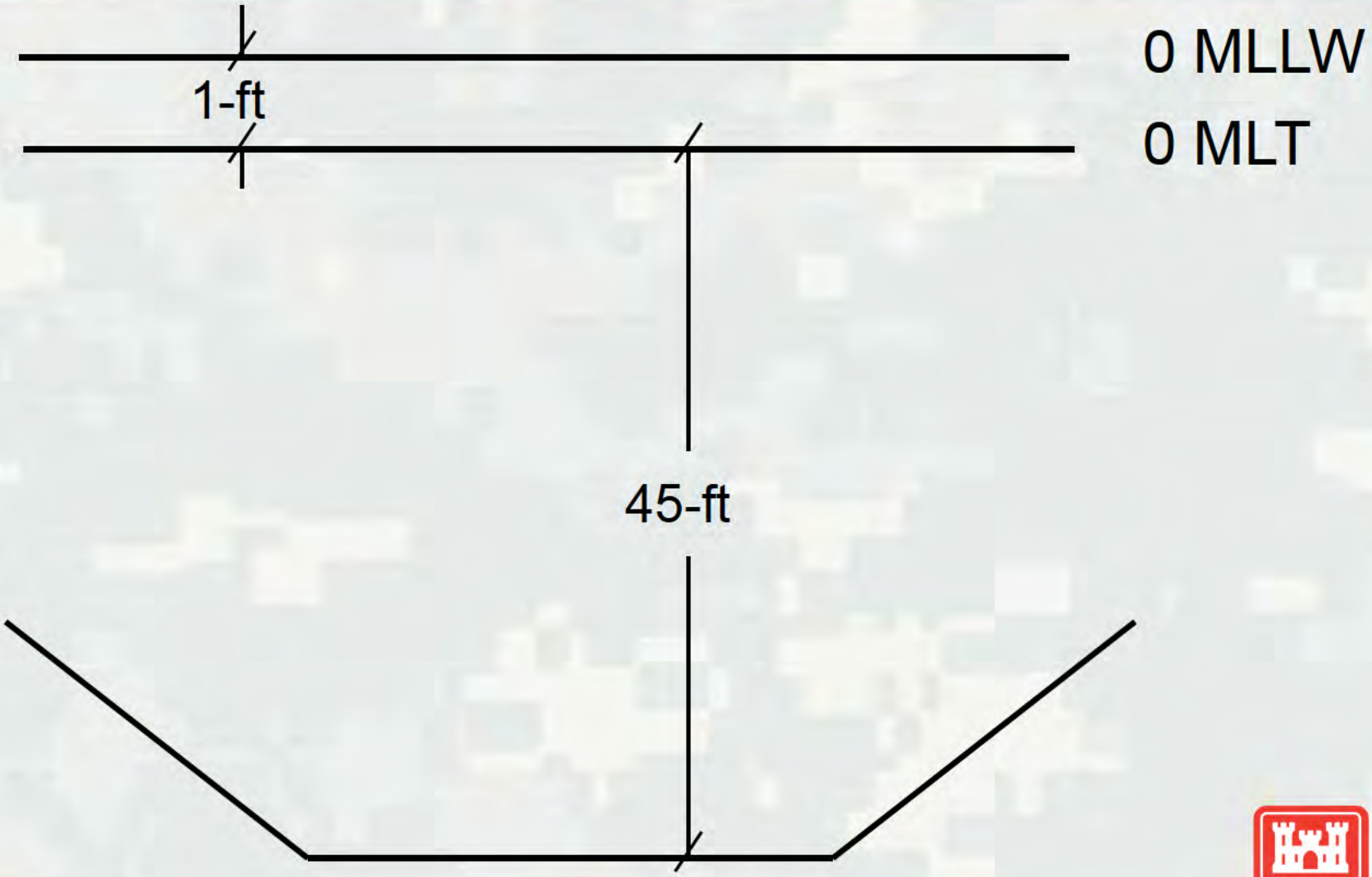

EXAMPLE #3

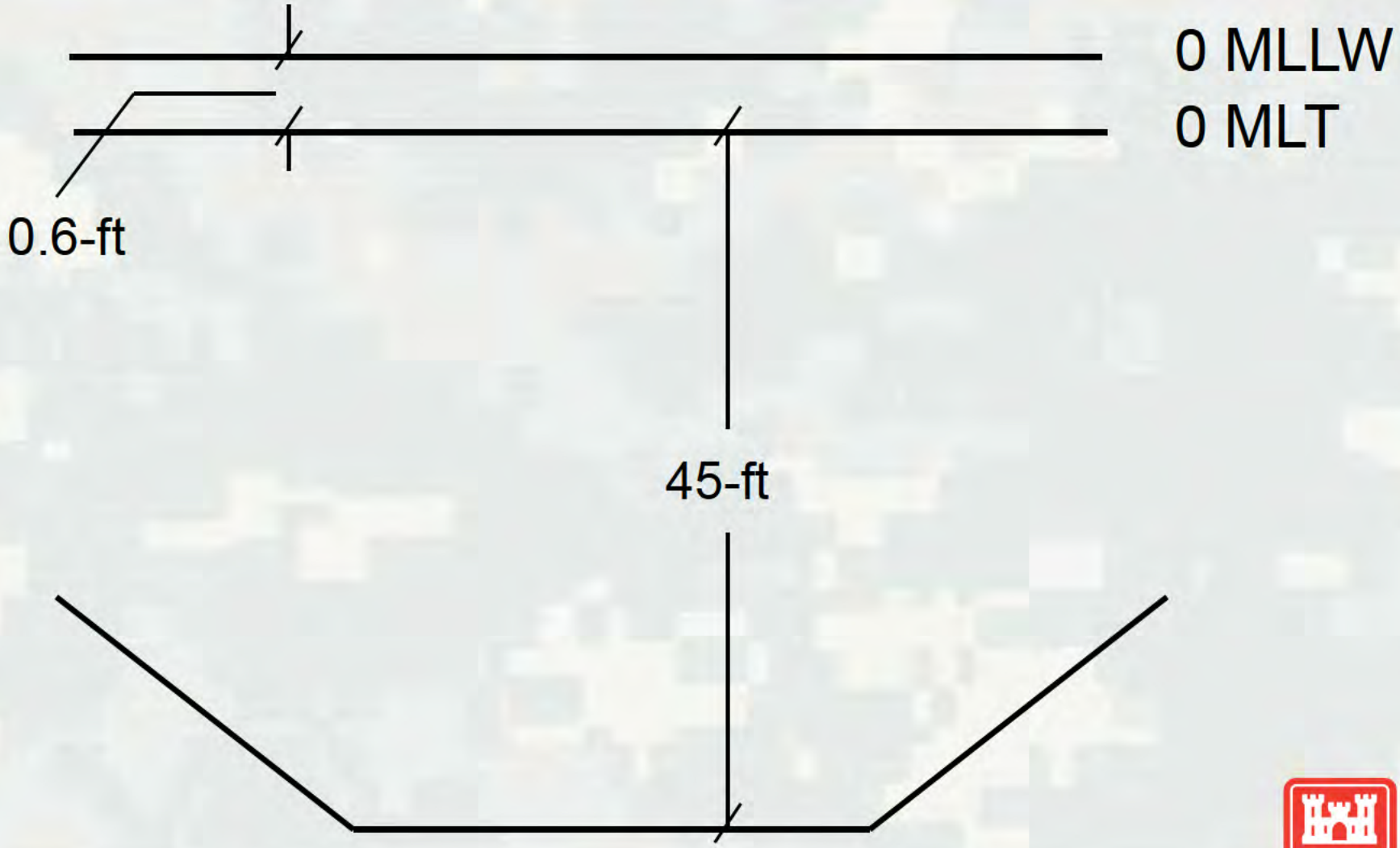

EXAMPLE #3

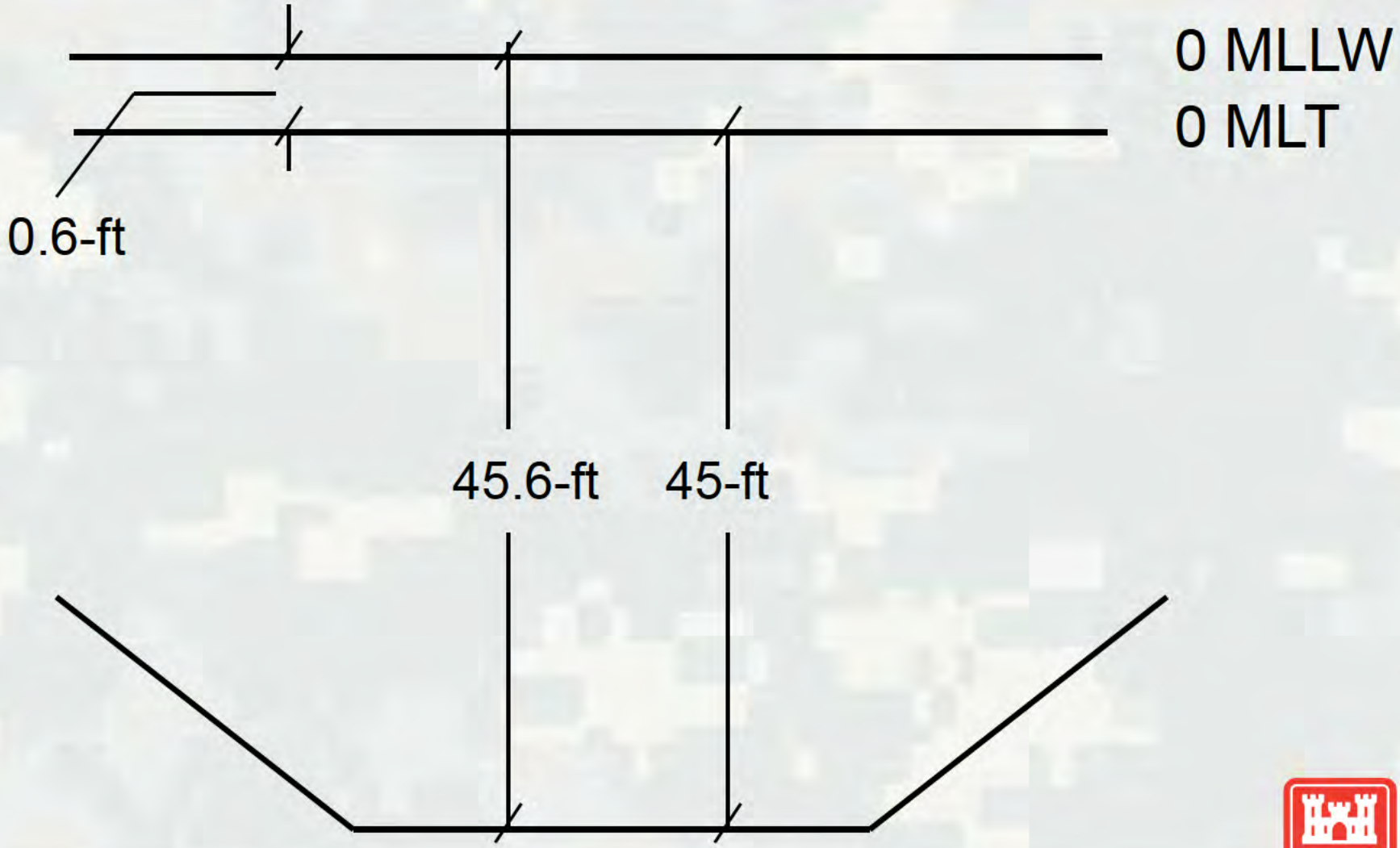

EXAMPLE #3

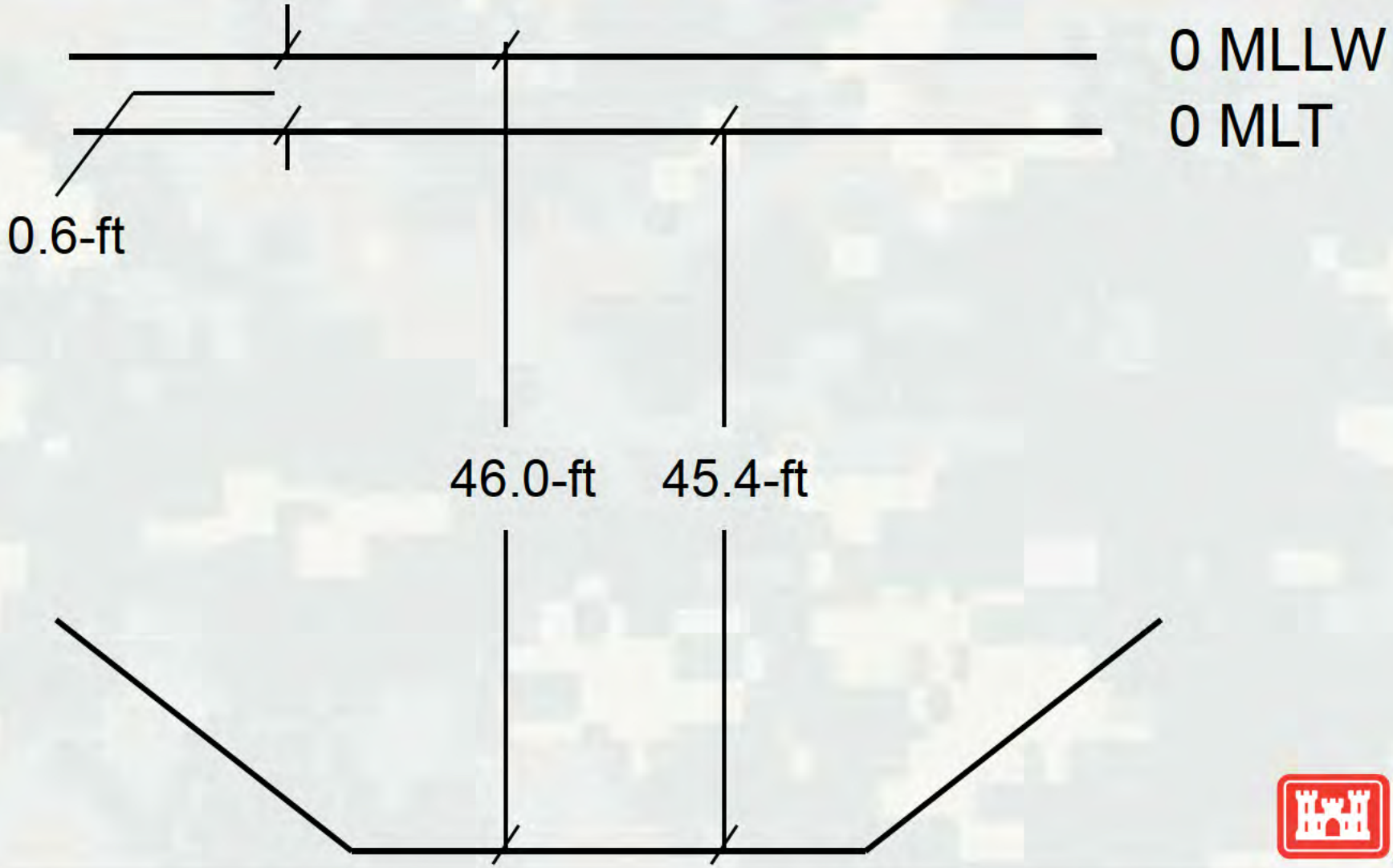

BOTTOMLINE

Federal Navigation Channels will:

Gain ‘or’ lose between

0 and 6 inches

in Depth

Tide Staff Installation

Hydrographic Survey Tolerance

Local Land Subsidence

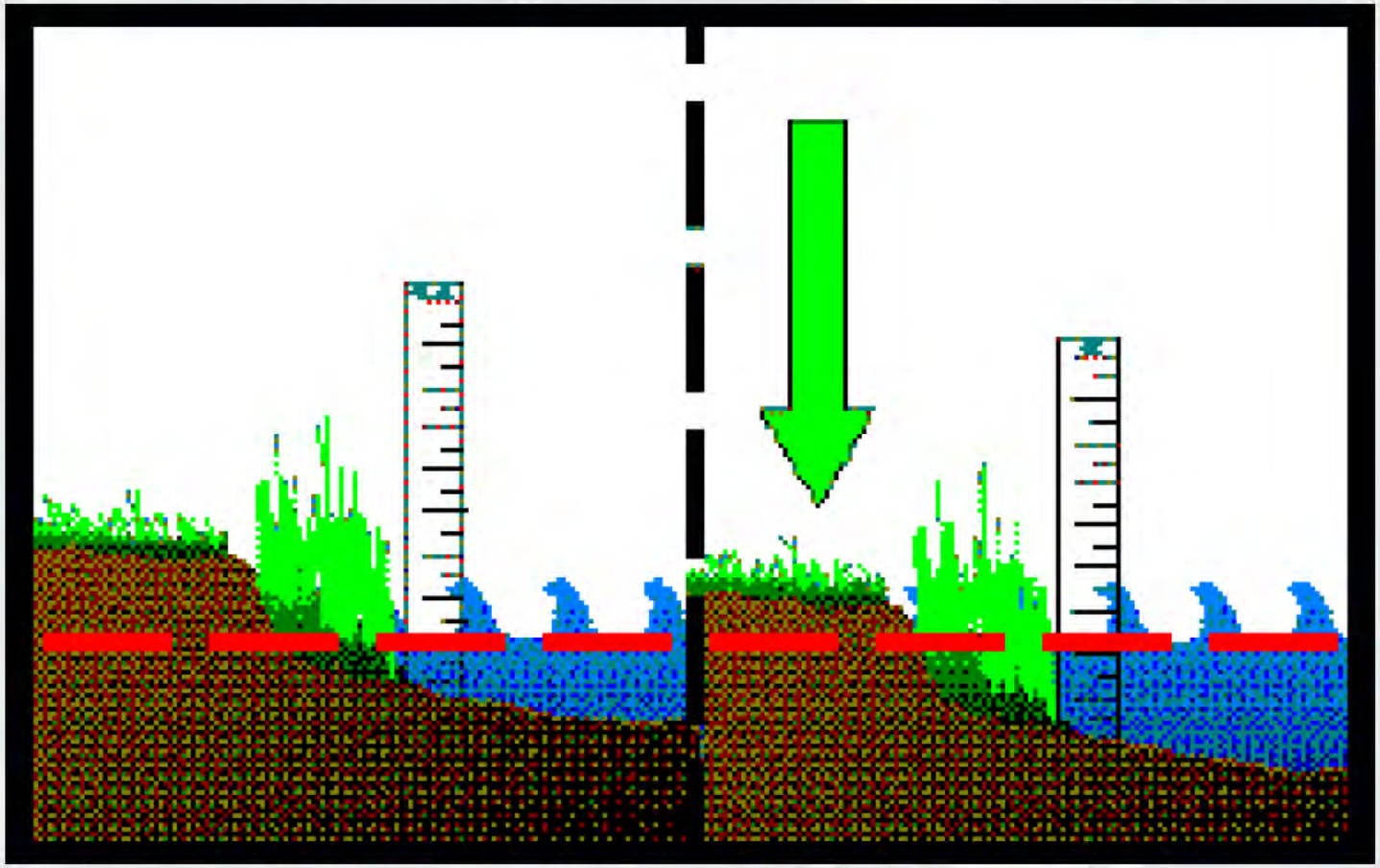

Sea Level Rise

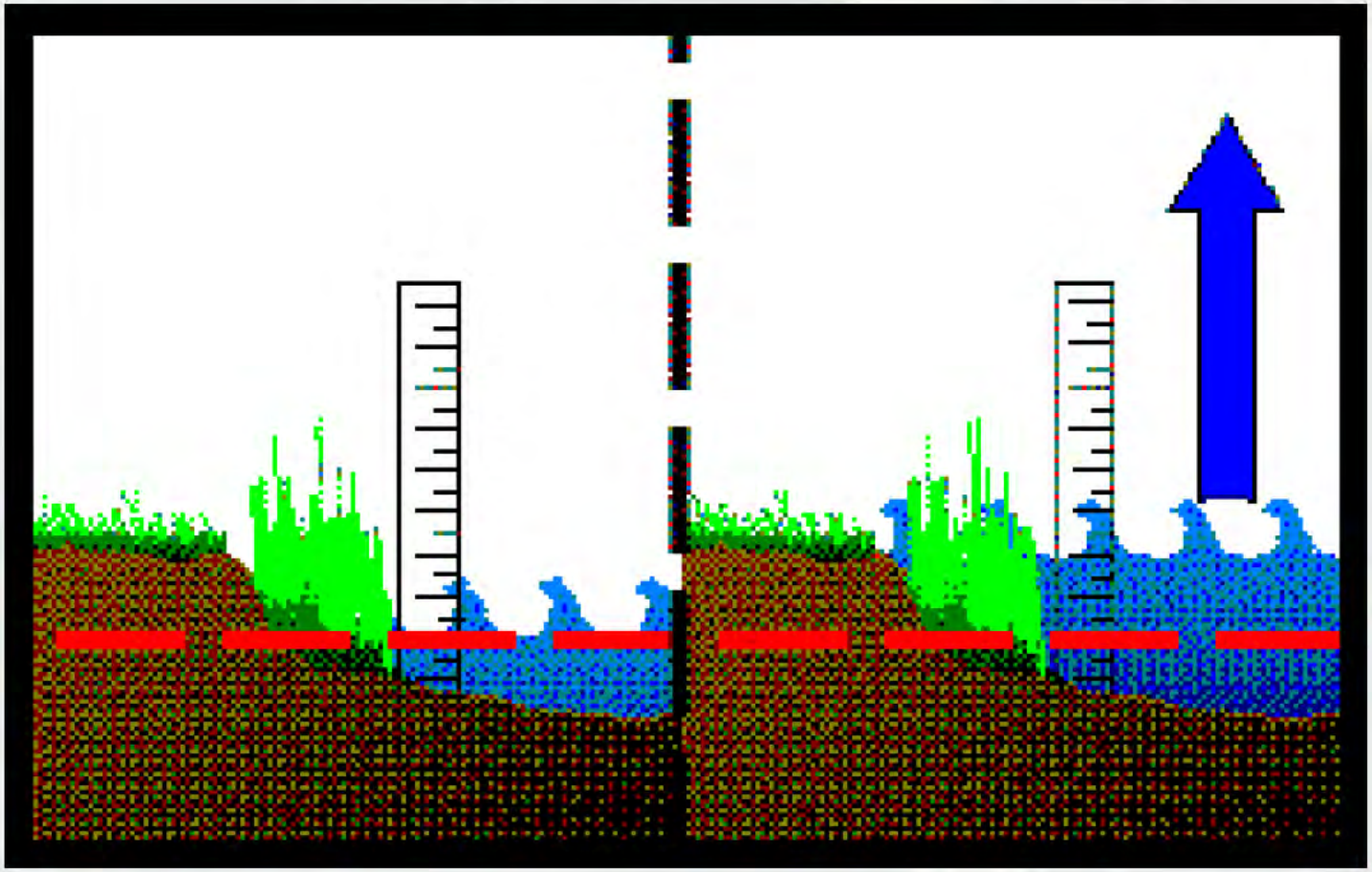

MLT –to– MLLW Implementation

- **Phase 1:** Reoccupy monuments associated with active/inactive gages & staffs
  100% COMPLETE
- **Phase 2:** Determine MLLW in selected coastal reaches
  97% COMPLETE - 100% by Sep 30, 2014
- **Phase 3:** Internal Data Management
  90% COMPLETE
- **Phase 4:** Internal / External communications
  Initiate today; Channel-specific communication in April 2014
- **Phase 5:** Perform physical changes to project controls, including updating/establishing new tide staffs
  Performed under cooperative agreement with GLO, TWDB, and Conrad Blucher Institute for Survey & Science

BUILDING STRONG®

Tide Staff Installation

Mean Low Tide –to– Mean Lower Low Water

Questions/Comments?