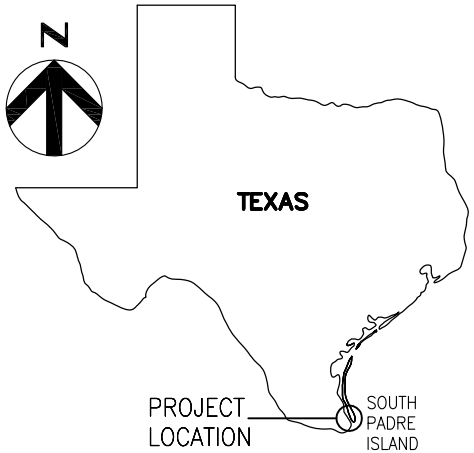

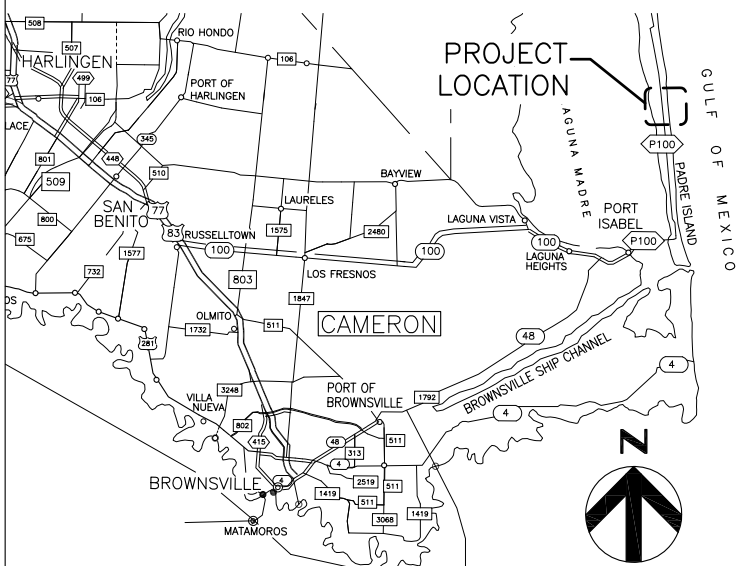

VICINITY MAP

N.T.S.

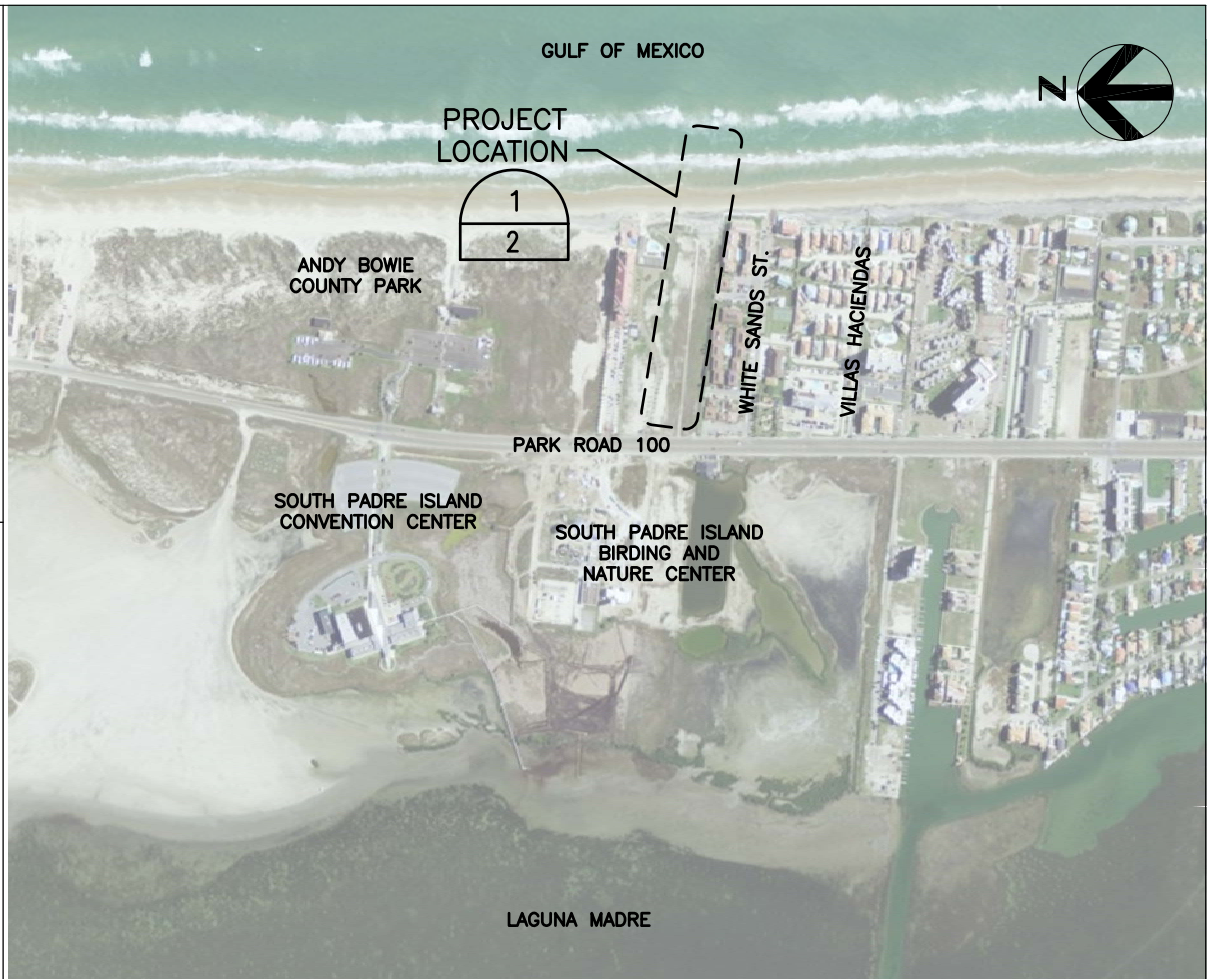

LOCATION MAP

N.T.S.

FOR COE USE ONLY
Permit Application No.:
Applicant Name:
Sheet ____ of ____

HDR

HDR Engineering, Inc.
TEXAS FIRM REGISTRATION NUMBER 754

ACTIVITY: CONSTRUCT WOODEN ELEVATED FISHING PIER

APPLICANT: CLAYTON'S BEACH BAR AND GRILL — DATUM: MLT

DATE: 11/12/12 — REV. DATE:

HDR JOB NO: 194870 — SWG-2012-00963 — SHEET 1 OF 4

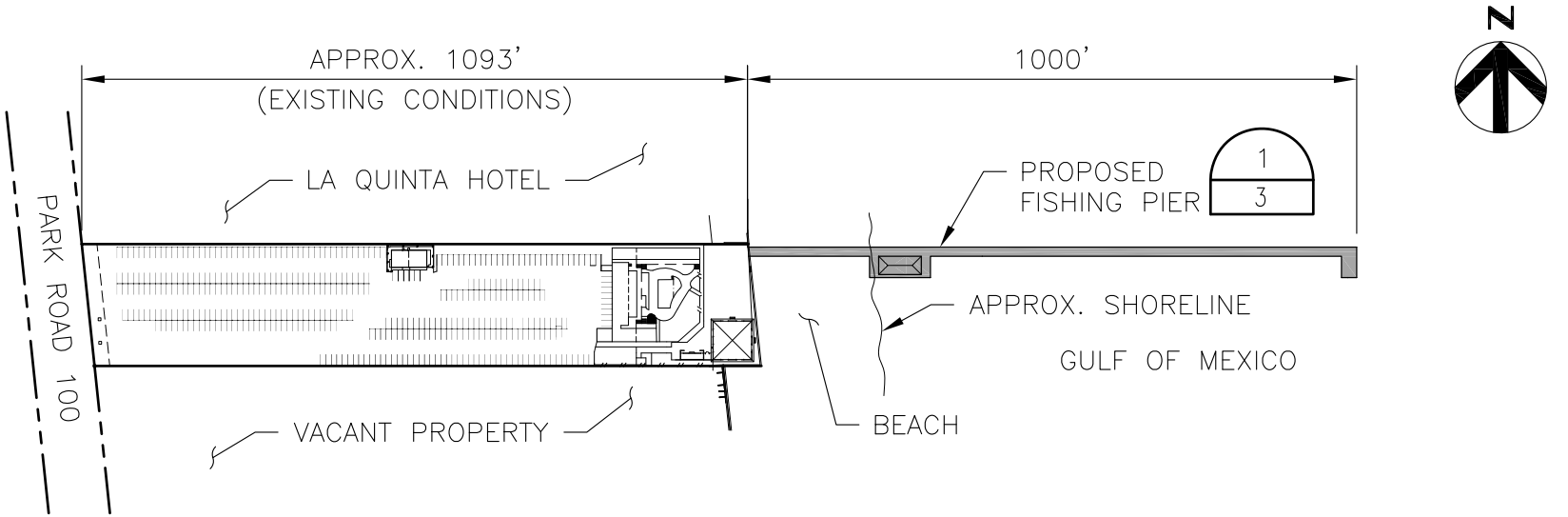

PROJECT SITE

1
1

SCALE 0 150' 300'

FOR COE USE ONLY
Permit Application No.:_____
Applicant Name:_____
Sheet ____ of ____

HDR

HDR Engineering, Inc.
TEXAS FIRM REGISTRATION NUMBER 754

ACTIVITY: CONSTRUCT WOODEN ELEVATED FISHING PIER

APPLICANT: CLAYTON'S BEACH BAR AND GRILL — **DATUM:** MLT

DATE: 11/12/12 — **REV. DATE:**

HDR JOB NO: 194870 — SWG-2012-00963 — SHEET 2 OF 4

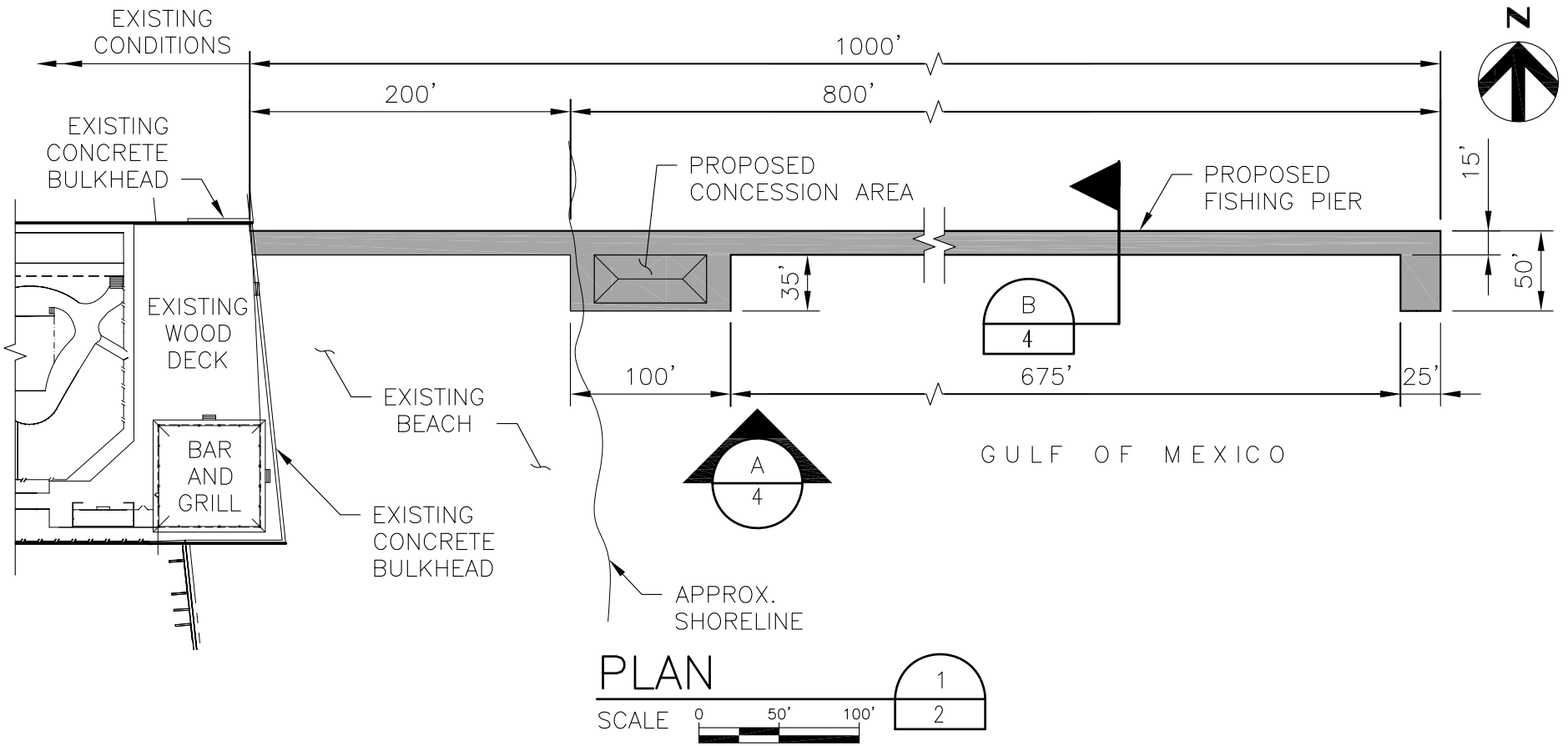

FOR COE USE ONLY
Permit Application No.:
Applicant Name:
Sheet ____ of ____

HDR

HDR Engineering, Inc.
TEXAS FIRM REGISTRATION NUMBER 754

ACTIVITY: CONSTRUCT WOODEN ELEVATED FISHING PIER

APPLICANT: CLAYTON'S BEACH BAR AND GRILL — **DATUM:** MLT

DATE: 11/12/12 — **REV. DATE:**

HDR JOB NO: 194870 — SWG-2012-00963 — SHEET 3 OF 4

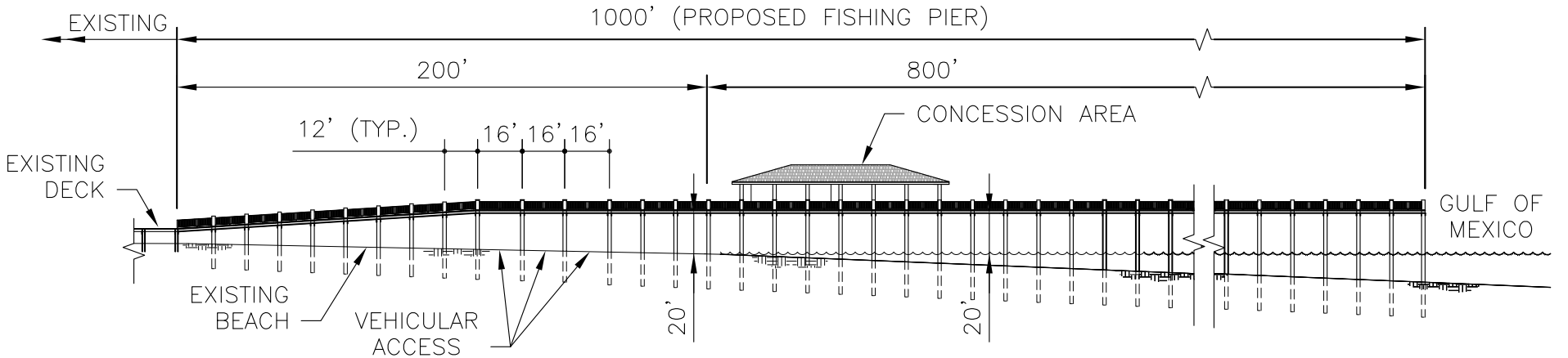

ELEVATION A 3

SCALE 0 30' 60'

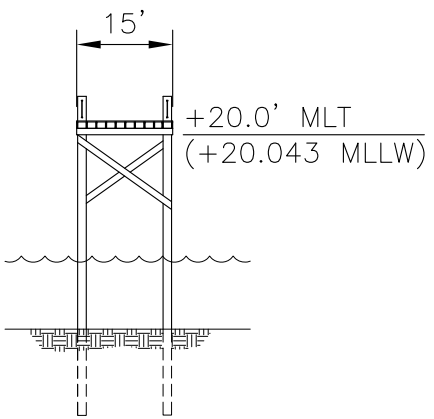

SECTION B 3

SCALE 0 15' 30'

FOR COE USE ONLY
Permit Application No.:
Applicant Name:
Sheet ____ of ____

HDR

HDR Engineering, Inc.
TEXAS FIRM REGISTRATION NUMBER 754

ACTIVITY: CONSTRUCT WOODEN ELEVATED FISHING PIER	
APPLICANT: CLAYTON'S BEACH BAR AND GRILL	DATUM: MLT
DATE: 11/12/12	REV. DATE:
HDR JOB NO: 194870 SWG-2012-00963	SHEET 4 OF 4