RECEIVED FEB 15 2008

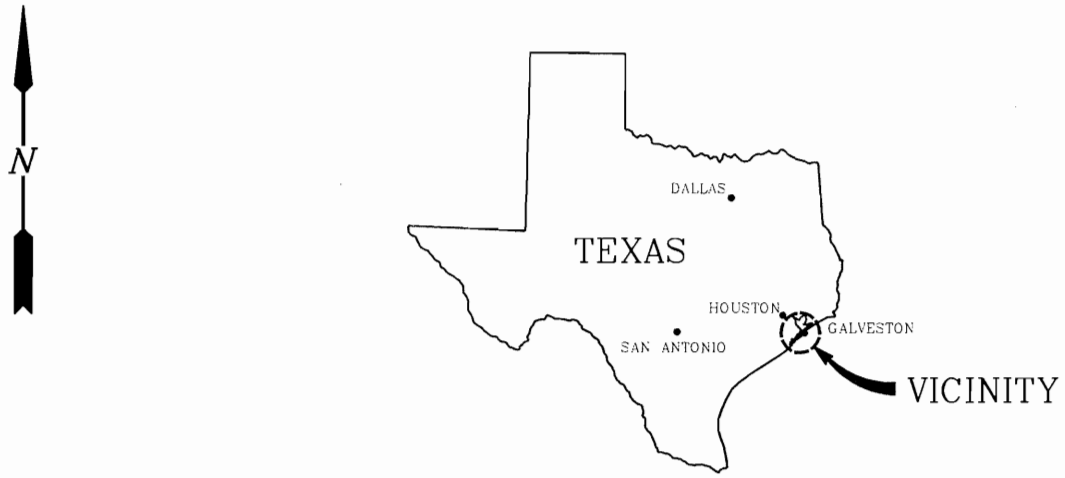

AREA MAP

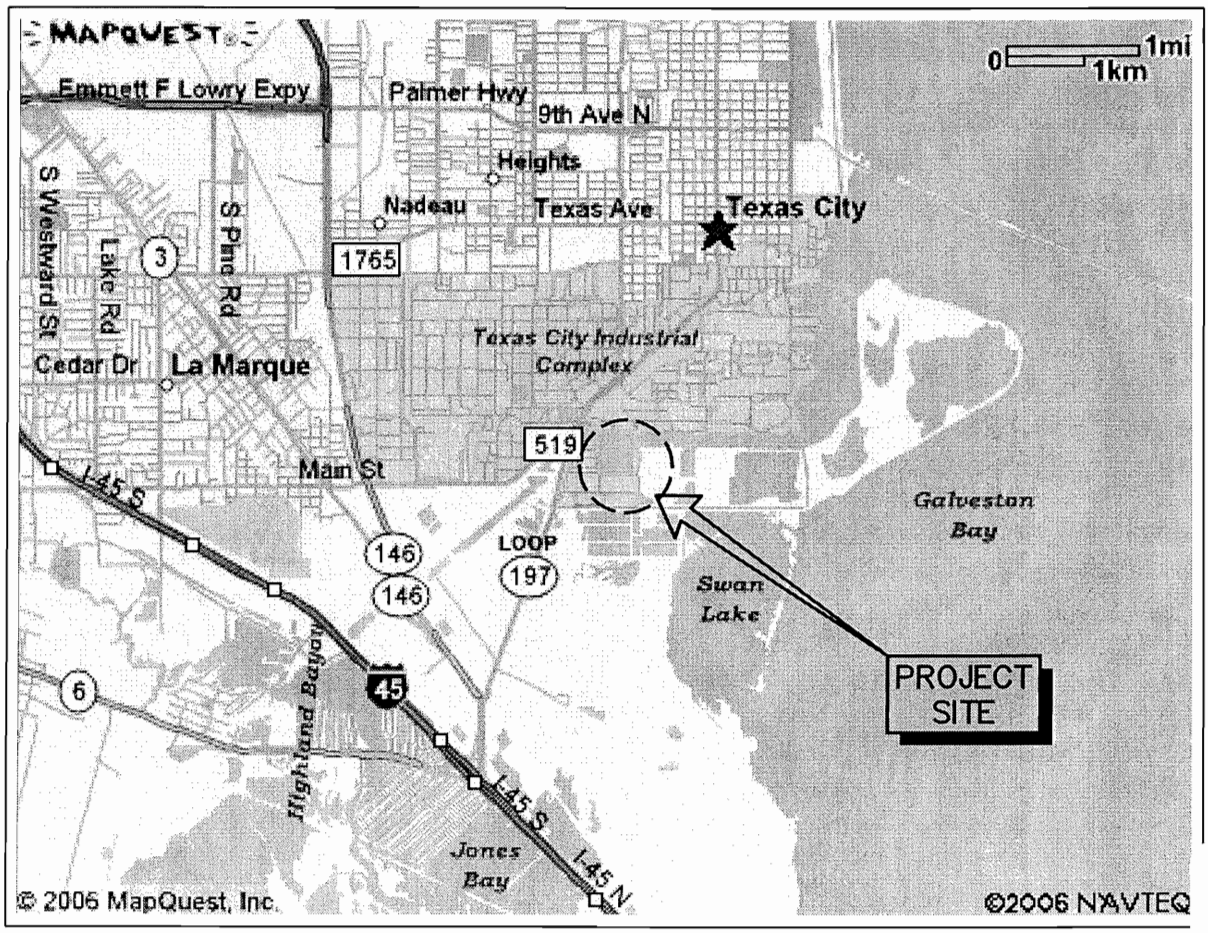

VICINITY MAP

GRAPHIC SCALE IN MILES

0 1 2 3

REV	DATE	BY	DESCRIPTION
A	1/10/08	BNF	ISSUED FOR PERMIT

LANIER & ASSOCIATES
CONSULTING ENGINEERS
INCORPORATED
NEW ORLEANS, LA · BEAUMONT, TX

OILTANKING TEXAS CITY
TEXAS CITY TEXAS

PROPOSED NEW BARGE DOCK 65E
PERMIT APPLICATION DRAWING
AREA & VICINITY MAPS

Oiltanking Texas City
Permit # SWG-2008-00255
Date: 15 February 2008
Page: 1 of 9

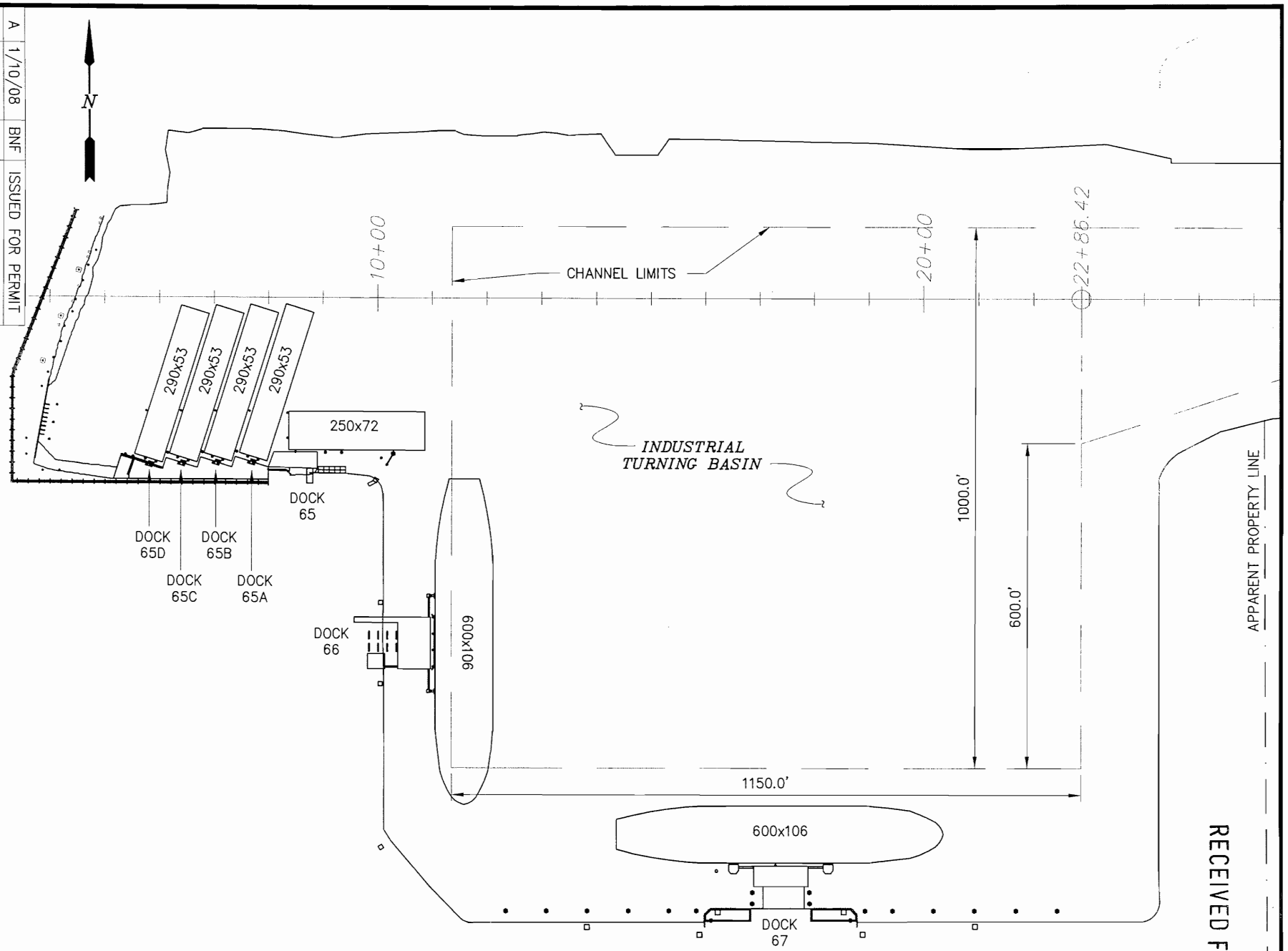

EXISTING SITE PLAN

SCALE: 1"=250'

GRAPHIC SCALE IN FEET

0 125 250 500

RECEIVED FEB 15 2008

REV	DATE	BY	DESCRIPTION
A	1/10/08	BNF	ISSUED FOR PERMIT

LANIER & ASSOCIATES
CONSULTING ENGINEERS
INCORPORATED
NEW ORLEANS, LA · BEAUMONT, TX

TEXAS CITY **OILTANKING TEXAS CITY** TEXAS

PROPOSED NEW BARGE DOCK 65E
PERMIT APPLICATION DRAWING
EXISTING SITE PLAN

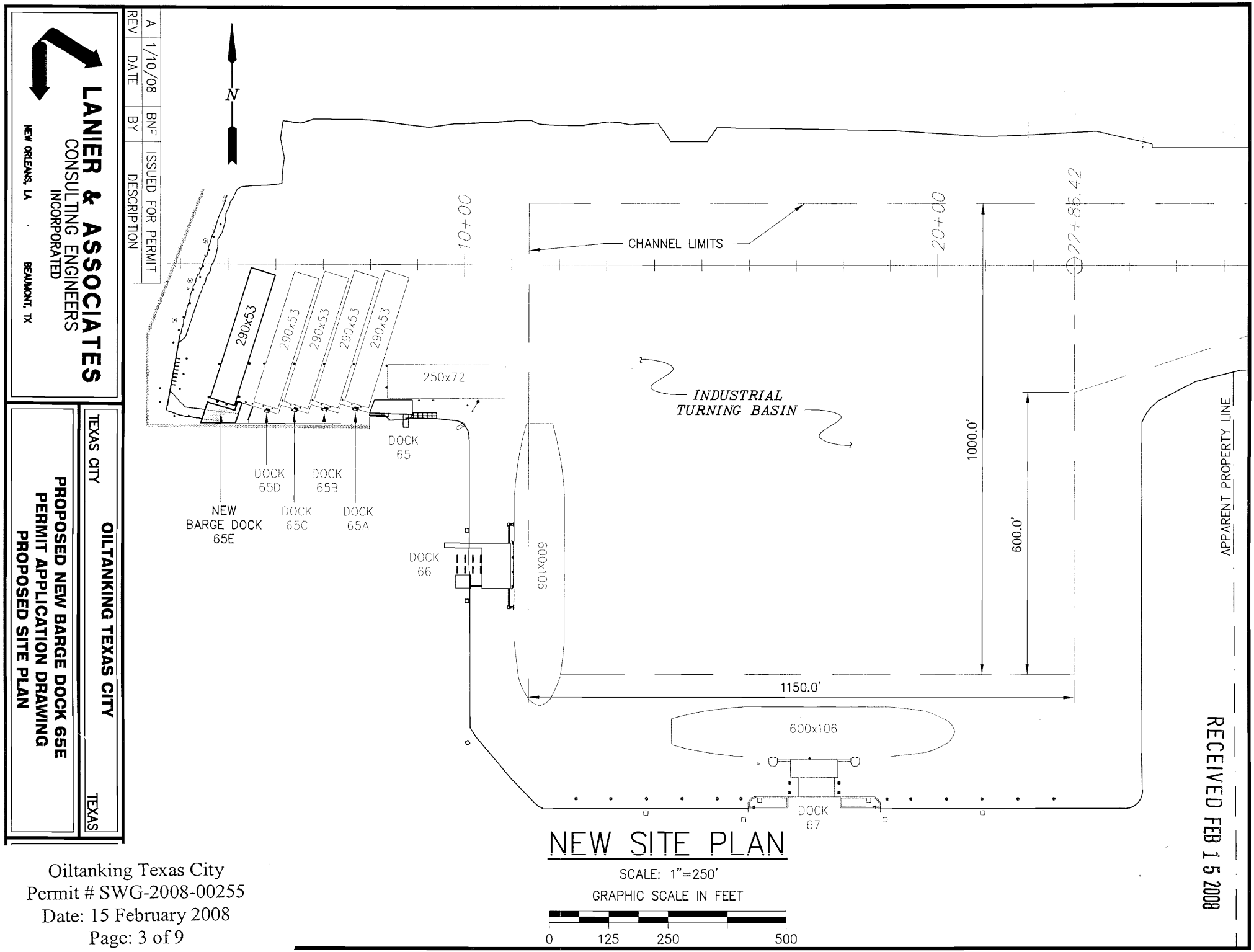
N
10+00
20+00
22+86.42
CHANNEL LIMITS
290x53
290x53
290x53
290x53
290x53
250x72
INDUSTRIAL
TURNING BASIN
DOCK
65
DOCK
65D
DOCK
65B
NEW
BARGE DOCK
65E
DOCK
65C
DOCK
65A
DOCK
66
600x106
1000.0'
600.0'
1150.0'
600x106
DOCK
67
APPARENT PROPERTY LINE
RECEIVED FEB 15 2008
NEW SITE PLAN
SCALE: 1"=250'
GRAPHIC SCALE IN FEET
0
125
250
500
LANIER & ASSOCIATES
CONSULTING ENGINEERS
INCORPORATED
NEW ORLEANS, LA
BEAUMONT, TX
REV
DATE
BY
DESCRIPTION
A
1/10/08
BNF
ISSUED FOR PERMIT
TEXAS CITY
OILTANKING TEXAS CITY
TEXAS
PROPOSED NEW BARGE DOCK 65E
PERMIT APPLICATION DRAWING
PROPOSED SITE PLAN

RECEIVED FEB 15 2008

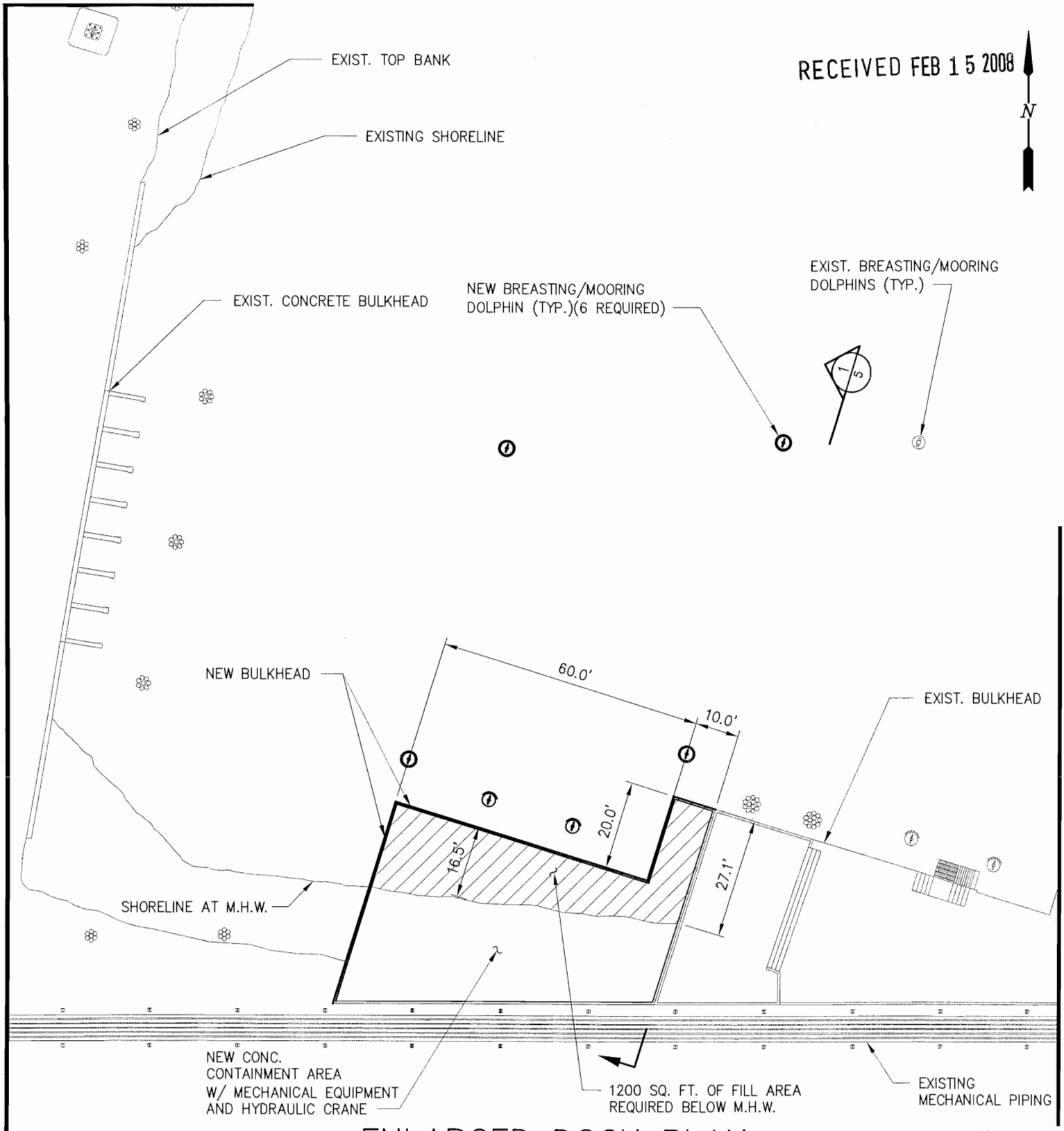

ENLARGED DOCK PLAN

SCALE: 1"=30'

GRAPHIC SCALE IN FEET

0 15 30 60

REV	DATE	BY	DESCRIPTION
A	1/10/08	BNF	ISSUED FOR PERMIT

LANIER & ASSOCIATES
CONSULTING ENGINEERS
INCORPORATED
NEW ORLEANS, LA · BEAUMONT, TX

OILTANKING TEXAS CITY
TEXAS CITY TEXAS

PROPOSED NEW BARGE DOCK 65E
PERMIT APPLICATION DRAWING
ENLARGED DOCK AND BULKHEAD PLAN

REV	DATE	BY	DESCRIPTION
A	1/10/08	BNF	ISSUED FOR PERMIT

LANIER & ASSOCIATES
CONSULTING ENGINEERS
INCORPORATED
NEW ORLEANS, LA · BEAUMONT, TX

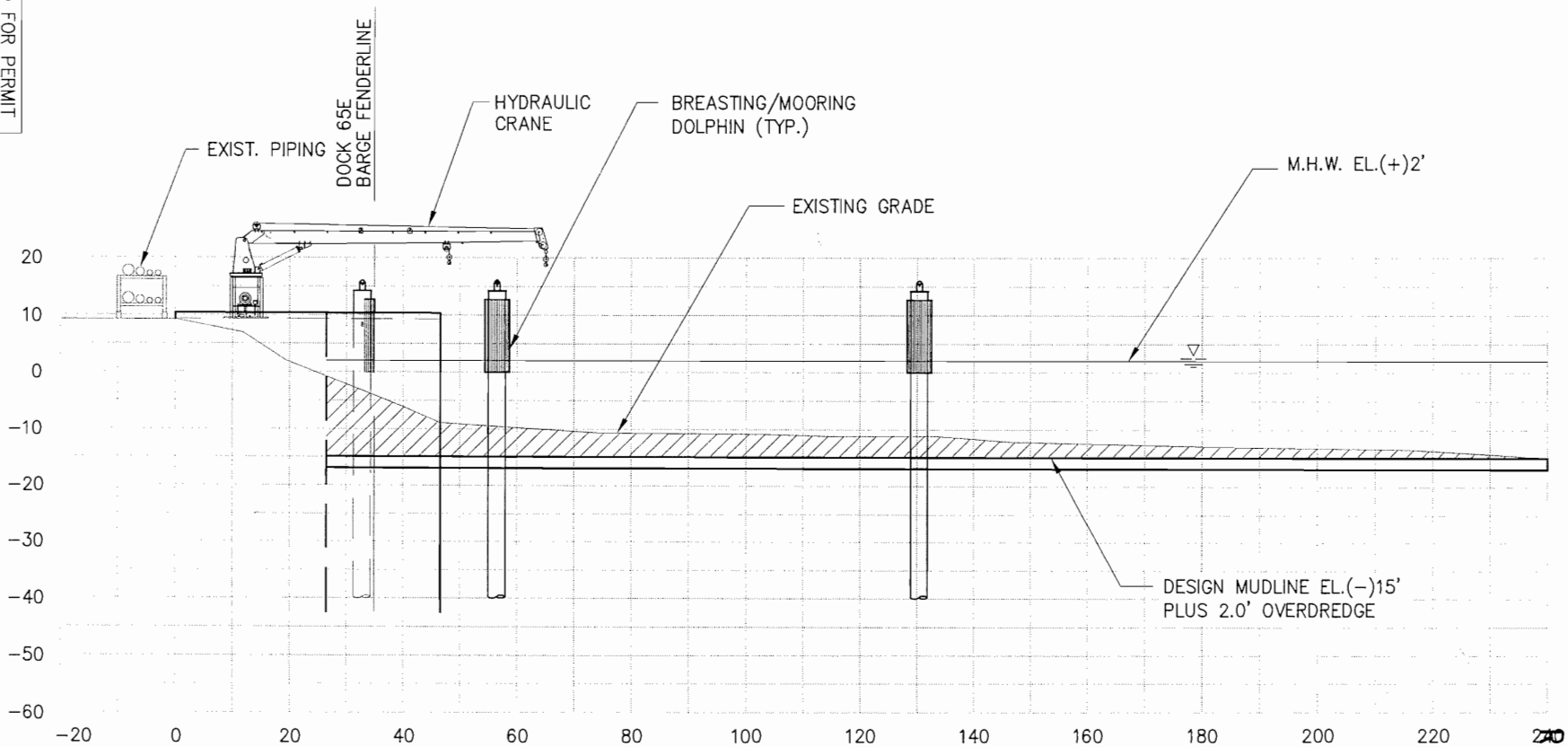

TYPICAL SECTION THROUGH DOCK E

SCALE: 1"=30'

1
4

GRAPHIC SCALE IN FEET

0 15 30 60

OILTANKING TEXAS CITY
TEXAS CITY TEXAS

PROPOSED NEW BARGE DOCK 65E
PERMIT APPLICATION DRAWING
SECTION AT DOCK

RECEIVED FEB 15 2008

RECEIVED FEB 1 5 2008

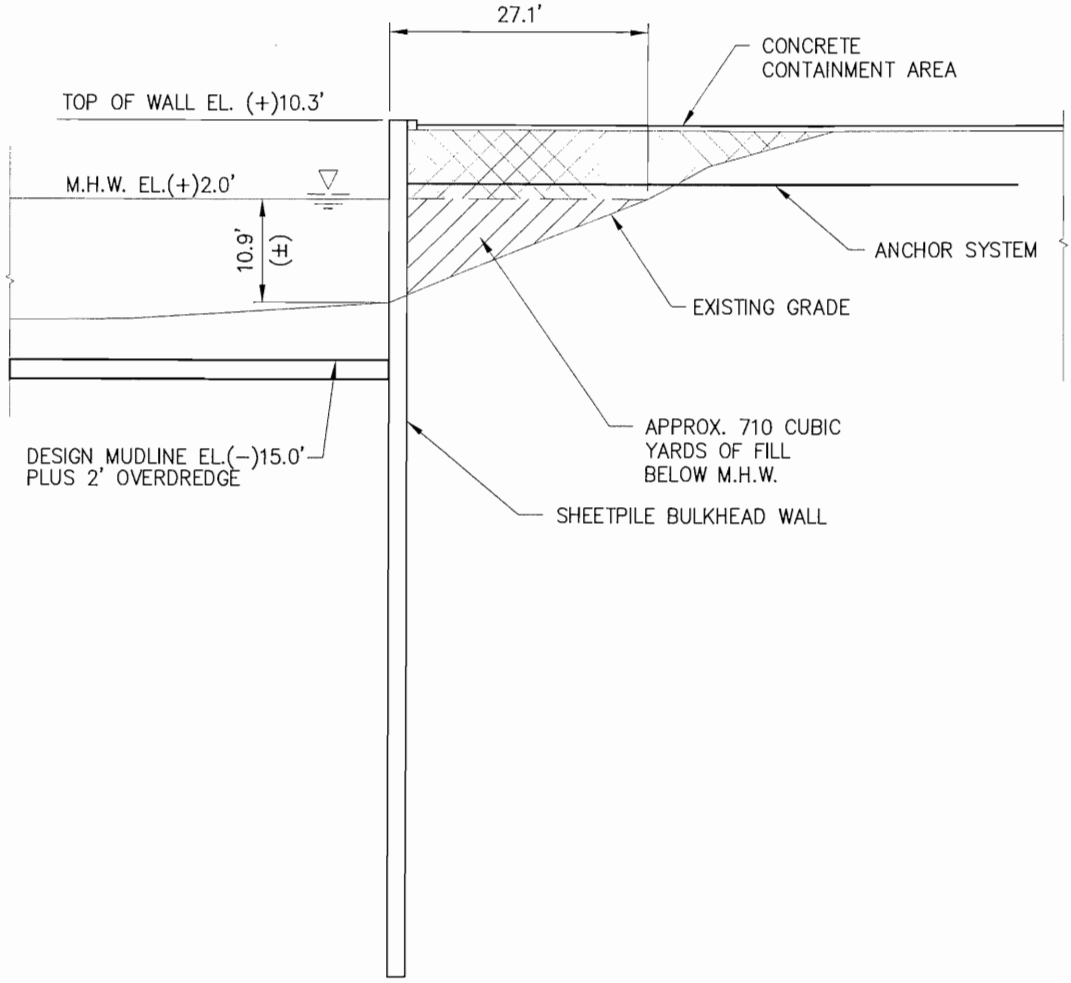

TYPICAL BULKHEAD SECTION

SCALE: 1"=20'

GRAPHIC SCALE IN FEET

0 10 20 40

REV	DATE	BY	DESCRIPTION
A	1/10/08	BNF	ISSUED FOR PERMIT

LANIER & ASSOCIATES
CONSULTING ENGINEERS
INCORPORATED
NEW ORLEANS, LA · BEAUMONT, TX

OILTANKING TEXAS CITY
TEXAS CITY TEXAS

PROPOSED NEW BARGE DOCK 65E
PERMIT APPLICATION DRAWING
TYPICAL BULKHEAD SECTION

RECEIVED FEB 15 2008

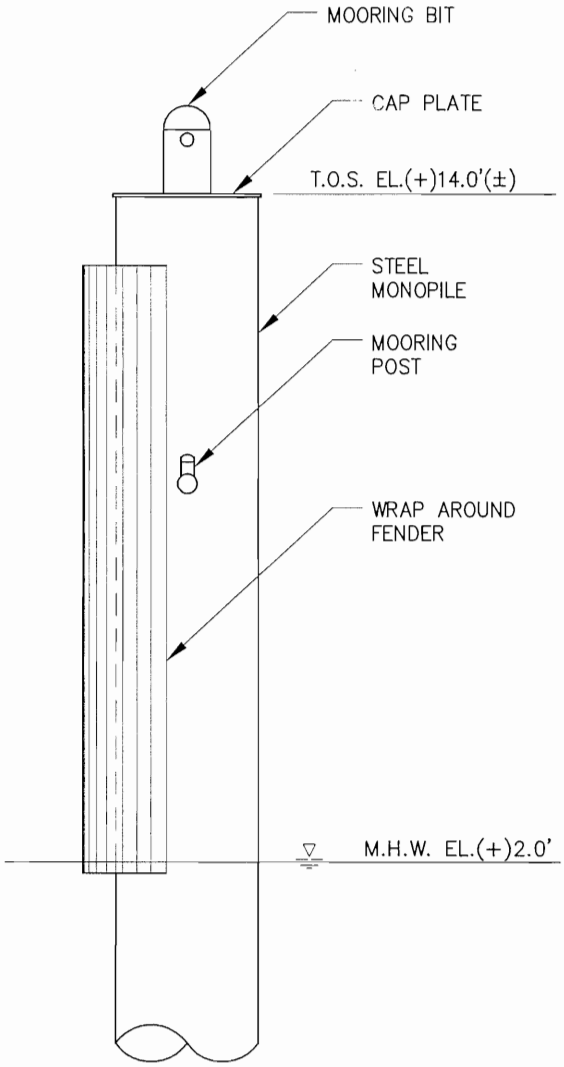

ELEVATION

N.T.S.

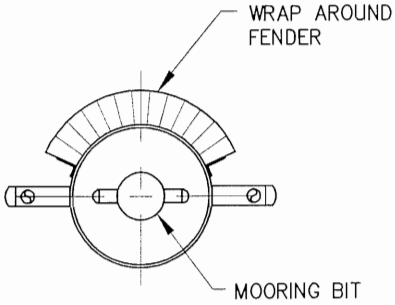

PLAN

N.T.S.

TYP. BARGE BREASTING/MOORING DOLPHIN

REV	DATE	BY	DESCRIPTION
A	1/10/08	BNF	ISSUED FOR PERMIT

LANIER & ASSOCIATES
CONSULTING ENGINEERS
INCORPORATED
NEW ORLEANS, LA · BEAUMONT, TX

OILTANKING TEXAS CITY
TEXAS CITY TEXAS

PROPOSED NEW BARGE DOCK 65E
PERMIT APPLICATION DRAWING
BARGE BREASTING/MOORING DOLPHIN

RECEIVED FEB 15 2008

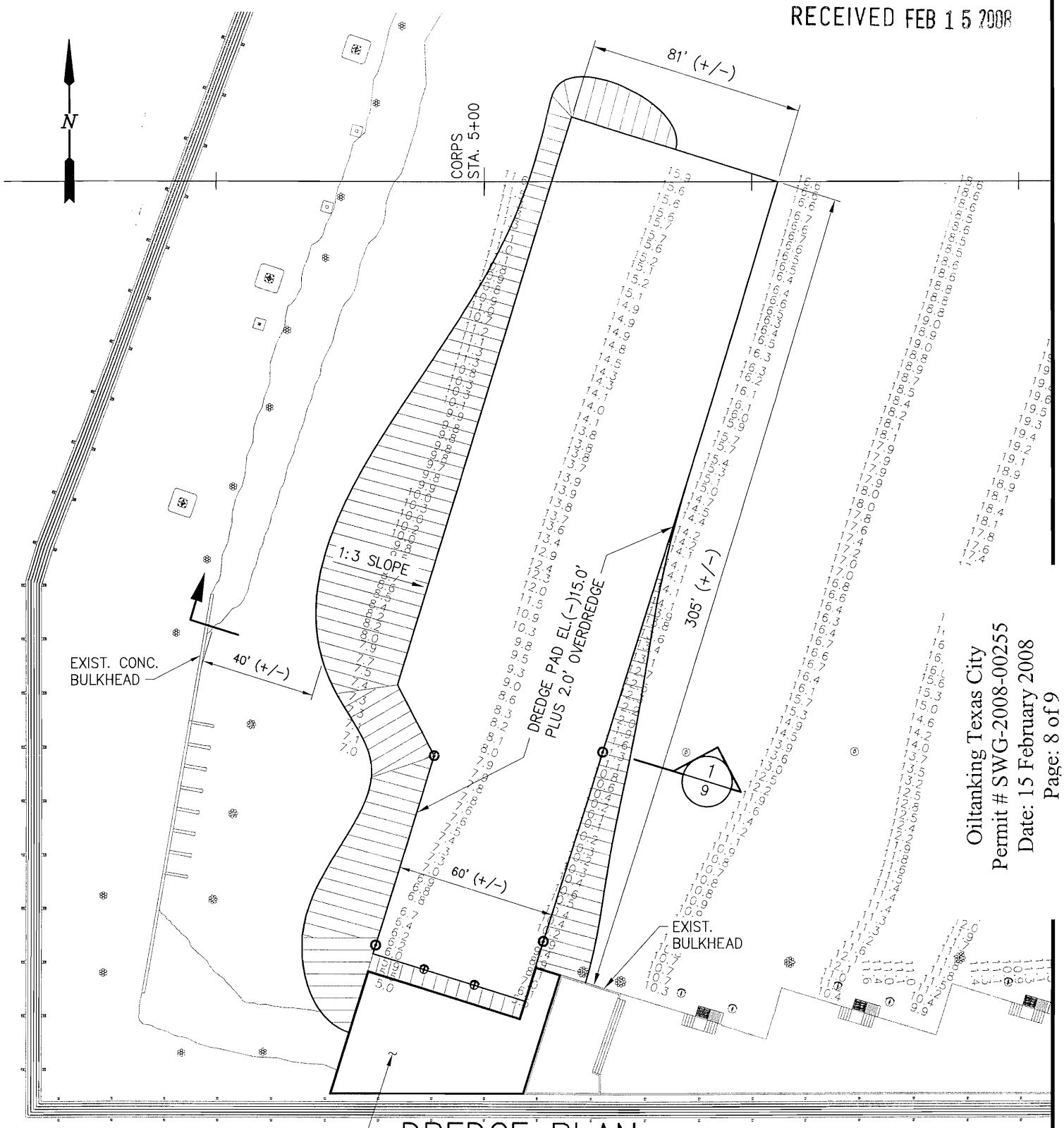

Oiltanking Texas City
Permit # SWG-2008-00255
Date: 15 February 2008
Page: 8 of 9

DREDGE PLAN

SCALE: 1"=50'

GRAPHIC SCALE IN FEET

0 25 50 100

NOTE:
DREDGE MATERIAL TO BE REMOVED BY HYDRAULIC OR MECHANICAL DREDGE & PLACED IN CORPS DESIGNATED DREDGE SOIL DISPOSIAL SITE.

REV	DATE	BY	DESCRIPTION
A	1/10/08	BNF	ISSUED FOR PERMIT

7737-P8

LANIER & ASSOCIATES
CONSULTING ENGINEERS
INCORPORATED
NEW ORLEANS, LA · BEAUMONT, TX

OILTANKING TEXAS CITY
TEXAS CITY TEXAS

PROPOSED NEW BARGE DOCK 65E
PERMIT APPLICATION DRAWING
DREDGE PLAN

DATE NOV 07'
DESIGN BNF
DRAWN TPM
CHECK JDA
CONTRACT 7737
SHEET No.
8 OF 9

RECEIVED FEB 15 2008

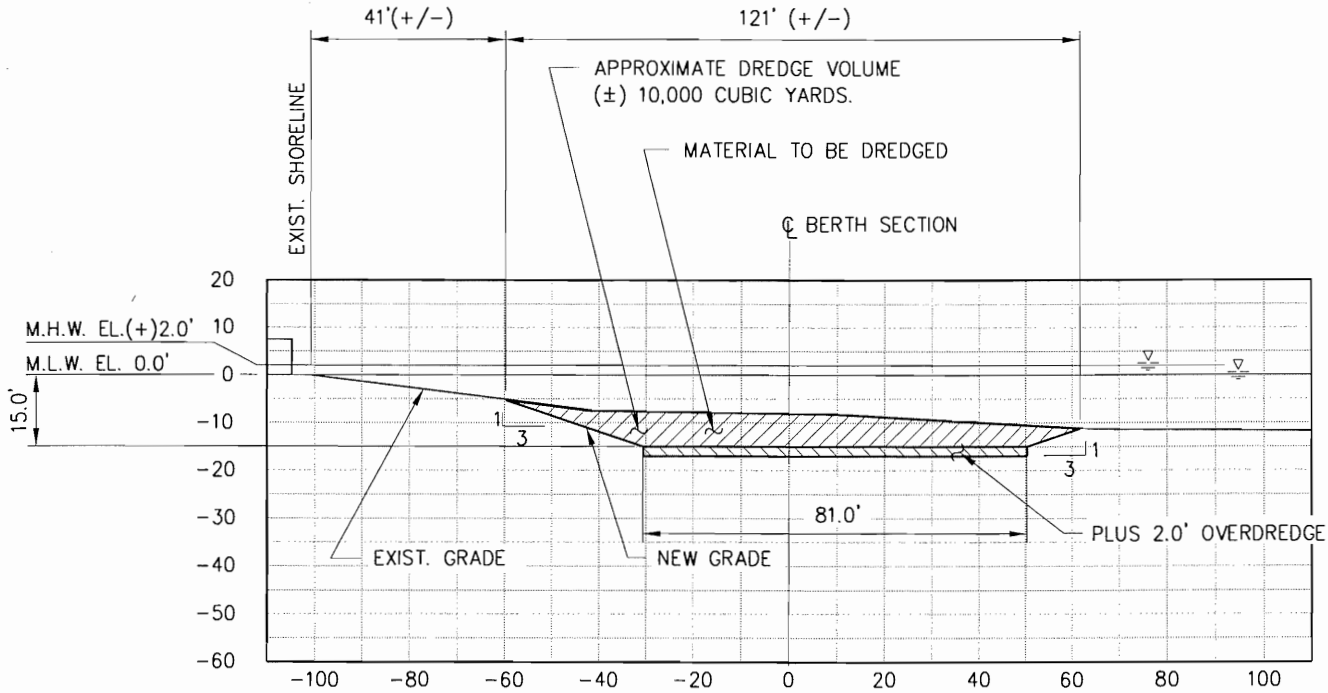

TYPICAL DREDGE CROSS SECTION

1/8

SCALE: 1"=40'

GRAPHIC SCALE IN FEET

0 20 40 80

REV	DATE	BY	DESCRIPTION
A	1/10/08	BNF	ISSUED FOR PERMIT

LANIER & ASSOCIATES
CONSULTING ENGINEERS
INCORPORATED
NEW ORLEANS, LA · BEAUMONT, TX

OILTANKING TEXAS CITY
TEXAS CITY TEXAS

PROPOSED NEW BARGE DOCK 65E
PERMIT APPLICATION DRAWING
TYPICAL DREDGE CUT SECTION

Oiltanking Texas City
Permit # SWG-2008-00255
Date: 15 February 2008
Page: 9 of 9