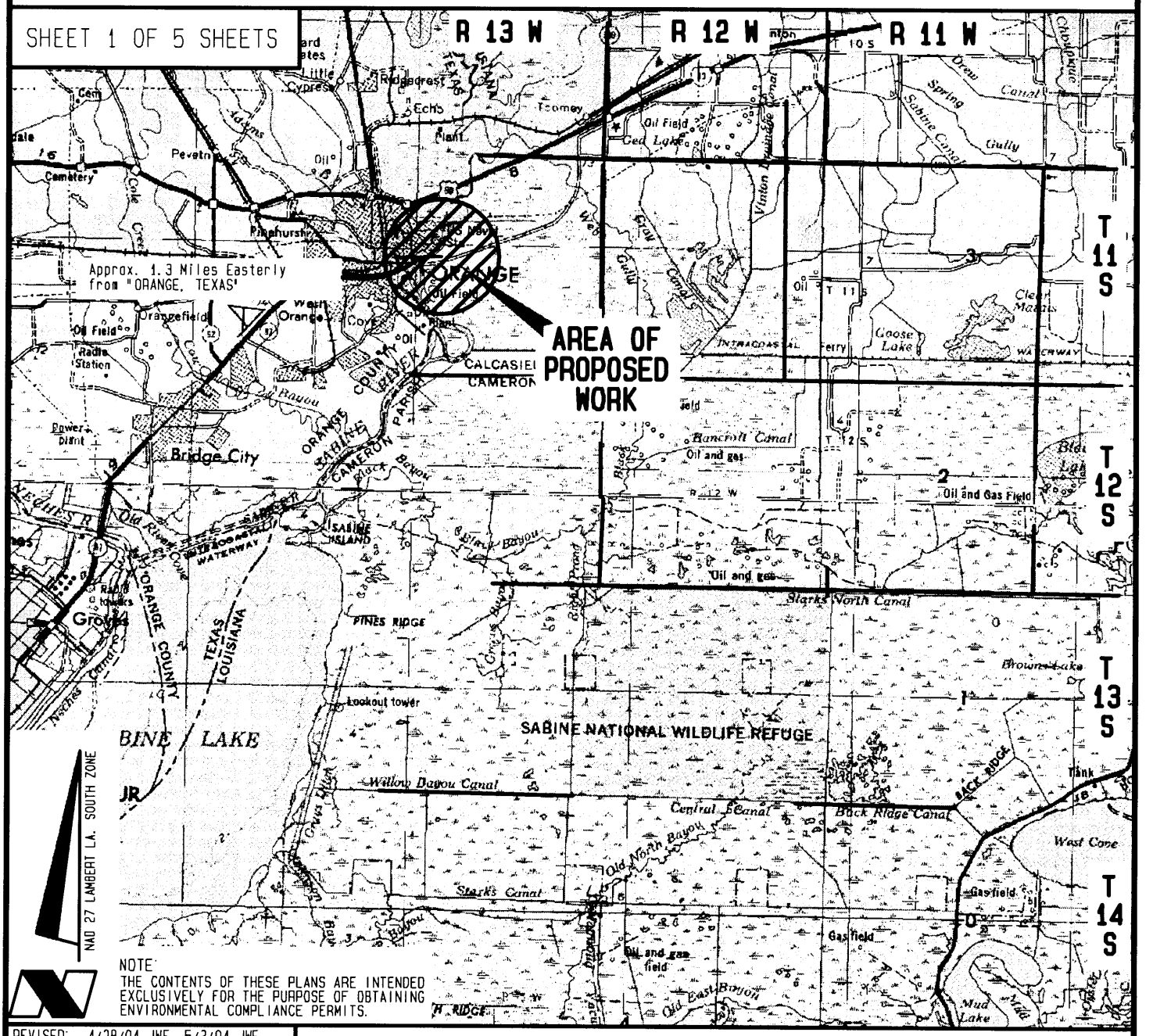

REVISED: 4/28/04 JWF, 5/3/04 JWF
09/20/04 JWF

Topography obtained from U.S. Geological Survey Maps "LAKE CHARLES, LA., TEXAS", 1954 Edition-Revised 1972 & "PORT ARTHUR, TX; LA.", 1956 Edition, Revised 1973.

VICINITY MAP

Scale: 1: 250,000

Drawn By: SBP
Proj. Mgr.: JWF

Application By:

WESTPORT OIL & GAS COMPANY, LP

April 19, 2004

2044563 i:/infocad/west/IMAGE5 354
i:/infocad/pcx/LCPA 250K 7 & 12

PROPOSED CLEANOUT, SLIP, SHELL PAD, PIPELINES & STRUCTURES

For Drilling *E. W. Brown, Jr.* Nos. 1, 2 & 3 Wells

Sections 17 & 20, T11S-R13W

Calcasieu Parish, Louisiana

PREPARED BY: C.H. Fenstermaker & Associates, Inc., Lafayette & New Orleans, Louisiana & Houston, Texas

SHEET 2 OF 5 SHEETS

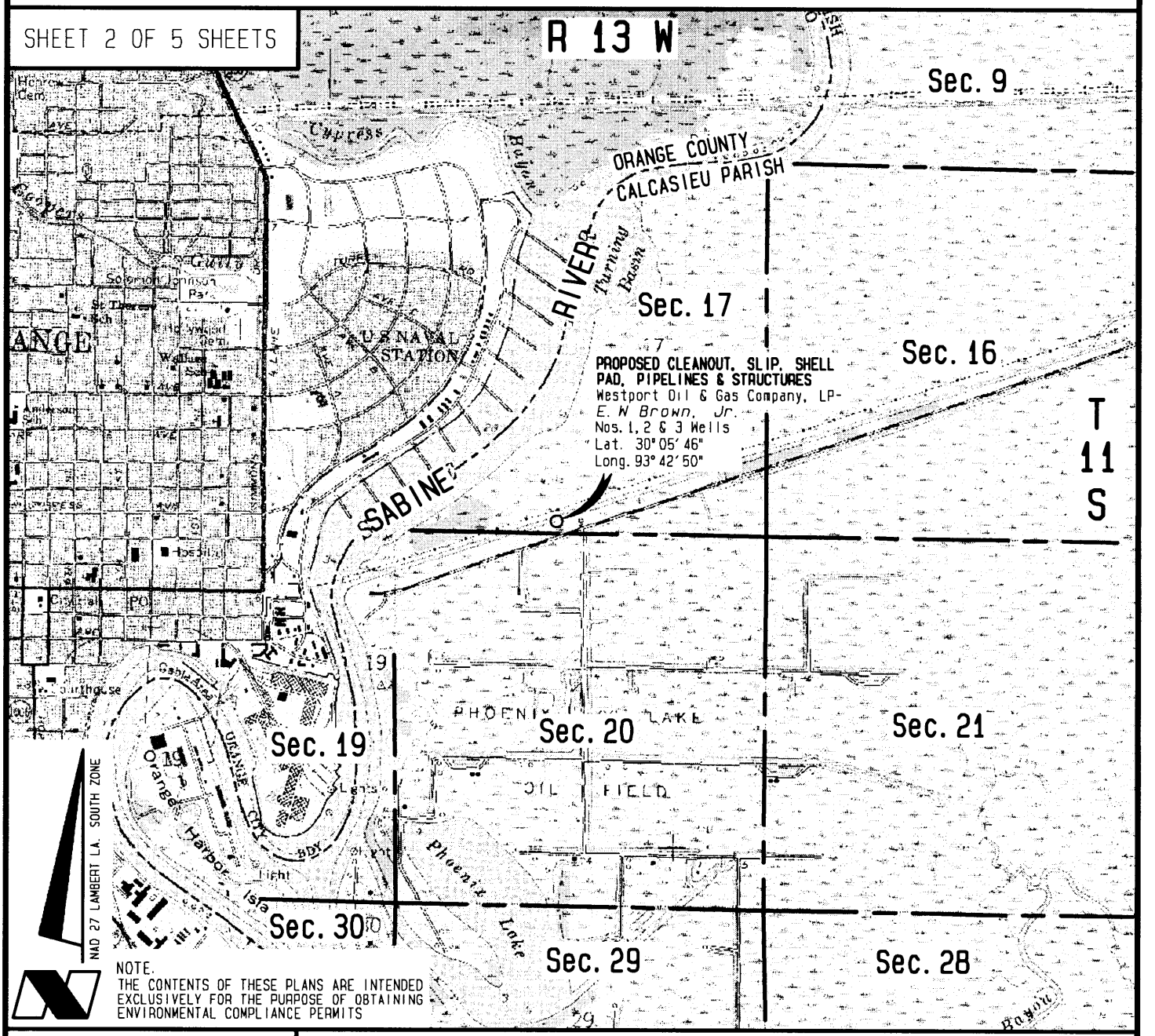

REVISED: 04/28/04 JWF, 5/3/04 JWF
09/20/04 JWF

Topography obtained from USC&GS Quadrangle "ORANGE, LA.-TEX." 1960 Edition, Photorevised 1970 & 1975.

VICINITY MAP
Scale: 1" = 2000'

Application By:

WESTPORT OIL & GAS COMPANY, LP

April 19, 2004

2044563 i:/infocad/rangew/11S13W 79
i:/infocad/pcx/usgs/La/drg/south 479

PROPOSED CLEANOUT, SLIP, SHELL PAD, PIPELINES & STRUCTURES

For Drilling *E. W. Brown, Jr.* Nos. 1, 2 & 3 Wells

Sections 17 & 20, T11S-R13W

Calcasieu Parish, Louisiana

PREPARED BY: C.H. Fenstermaker & Associates, Inc., Lafayette & New Orleans, Louisiana, & Houston, Texas

SHEET 3 OF 5 SHEETS

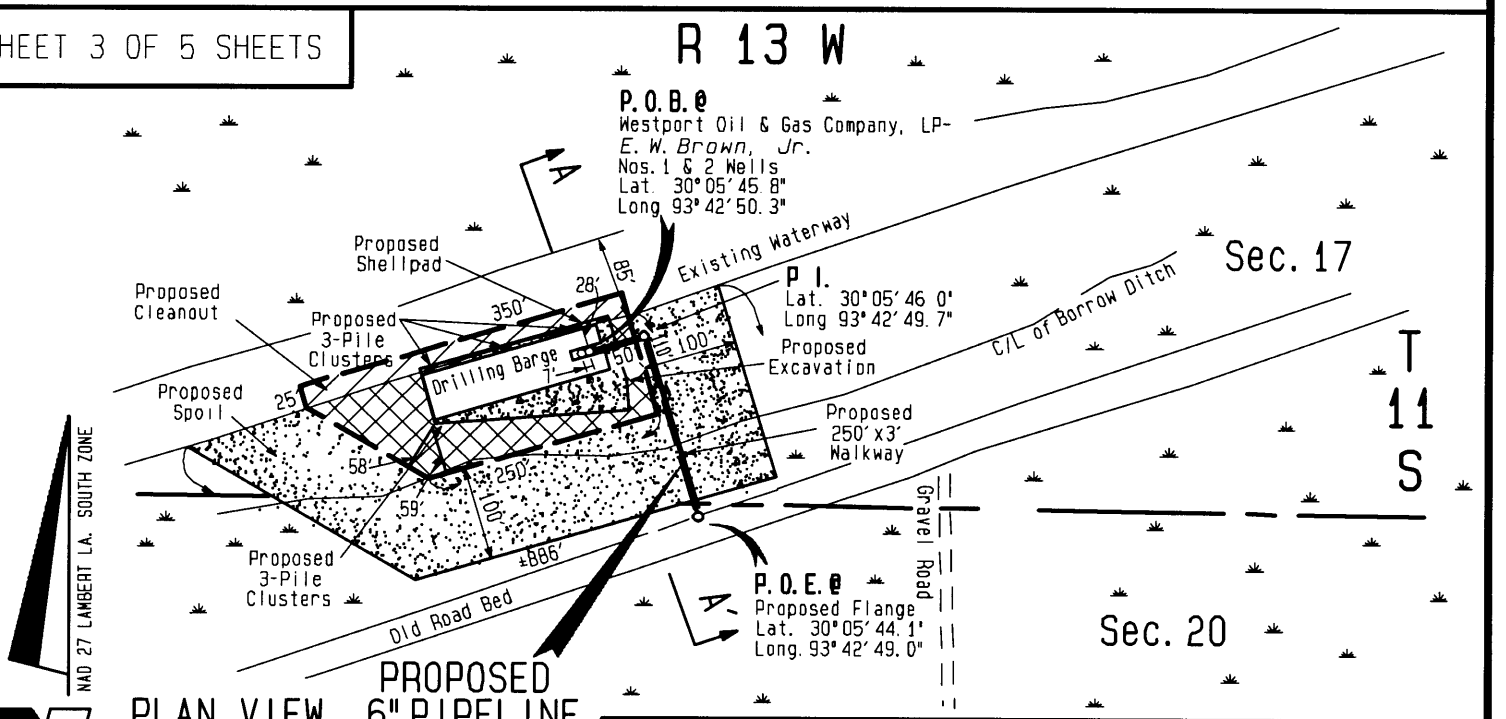

PLAN VIEW
Scale: 1" = 200'

Topography obtained from USC&GS Quadrangle "ORANGE, LA.-TEX." 1960 Edition, Photorevised 1970 & 1975.

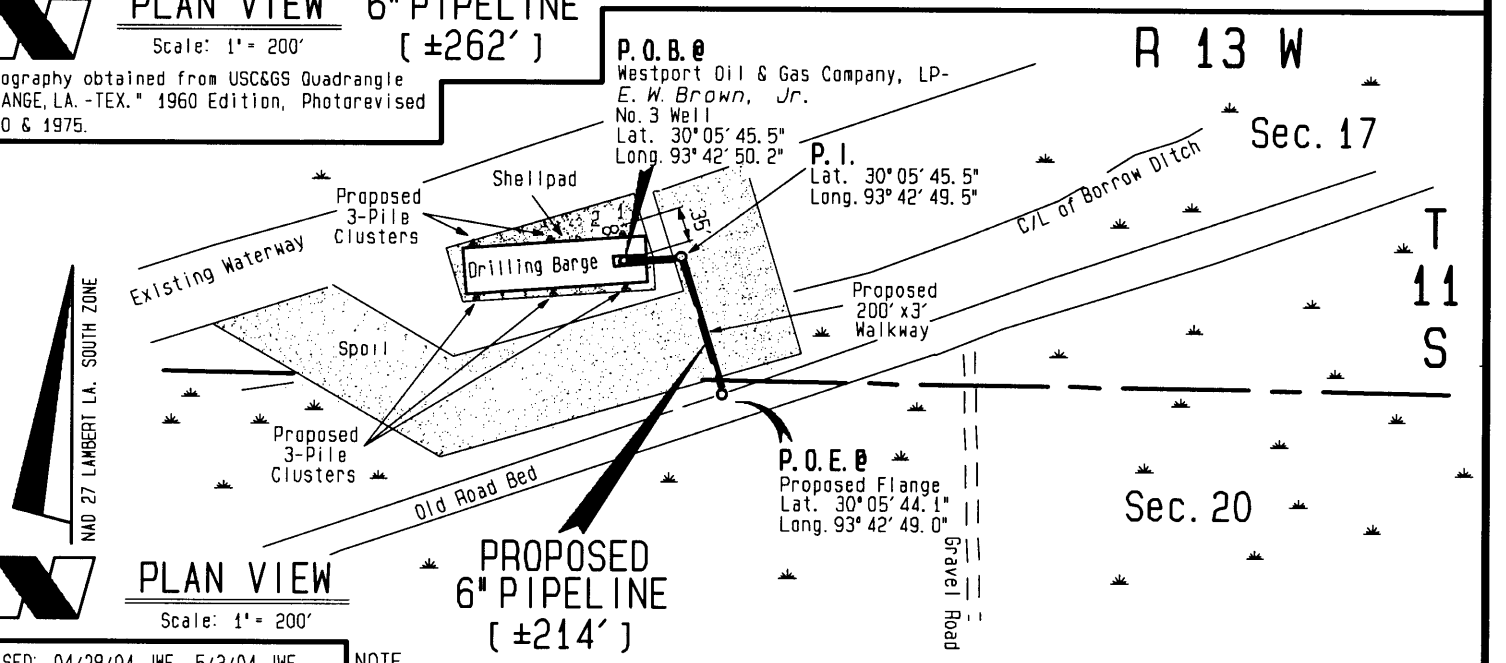

PLAN VIEW
Scale: 1" = 200'

REVISED: 04/28/04 JWF, 5/3/04 JWF
09/20/04 JWF

NOTE.
THE CONTENTS OF THESE PLANS ARE INTENDED EXCLUSIVELY FOR THE PURPOSE OF OBTAINING ENVIRONMENTAL COMPLIANCE PERMITS.

Topography obtained from USC&GS Quadrangle "ORANGE, LA.-TEX." 1960 Edition, Photorevised 1970 & 1975.

Application By:

WESTPORT OIL & GAS COMPANY, LP

April 19, 2004

2044563 i:/infocad/rangew/11S13W 80

PROPOSED CLEANOUT, SLIP, SHELL PAD, PIPELINES & STRUCTURES

For Drilling *E. W. Brown, Jr.* Nos. 1, 2 & 3 Wel

Sections 17 & 20, T11S-R13W

Calcasieu Parish, Louisiana

PREPARED BY: C. H. Fenstermaker & Associates, Inc., Lafayette & New Orleans, Louisiana, & Houston, Texas

SHEET 4 OF 5 SHEETS

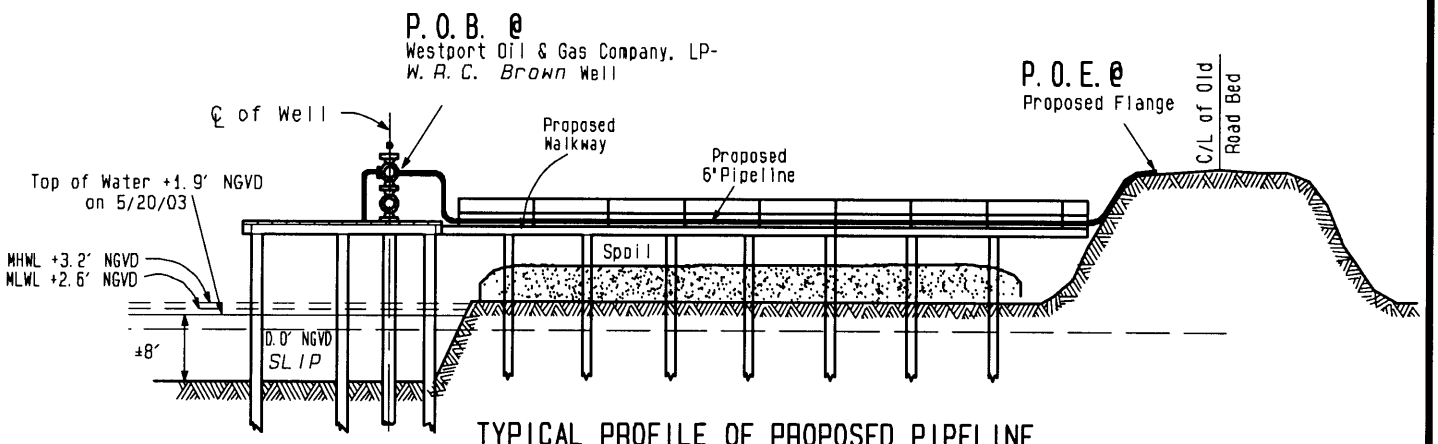

TYPICAL PROFILE OF PROPOSED PIPELINE
No Scale

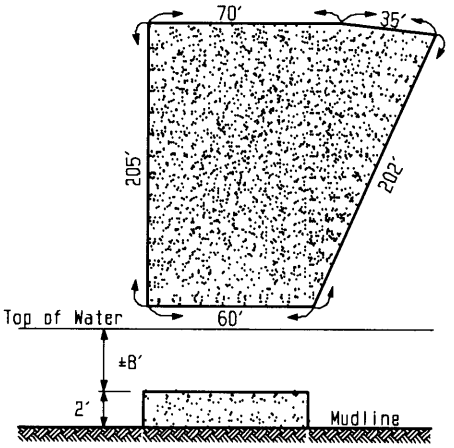

TYPICAL SHELL PAD
No Scale

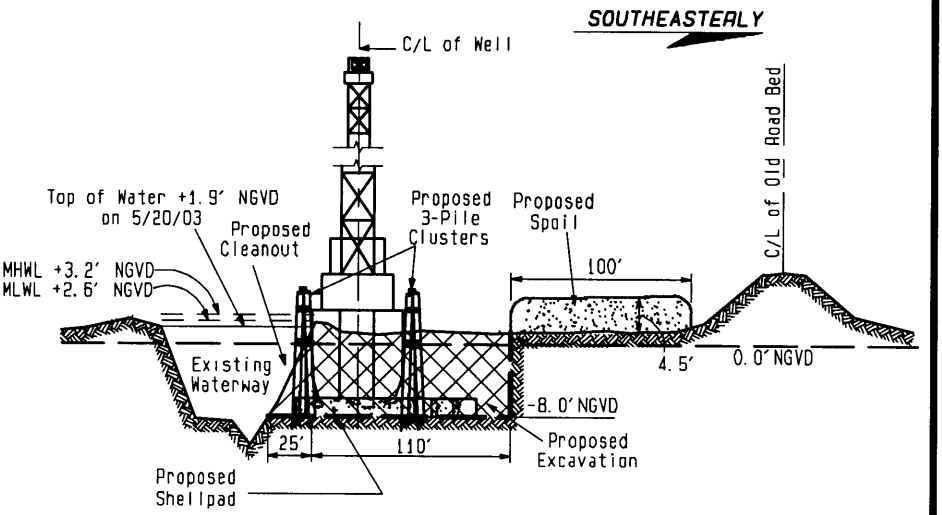

CROSS-SECTION A-A'
Horizontal Scale: 1" = 100'
Vertical Scale: 1" = 20'

REVISED: 04/28/04 JWF, 5/3/04 JWF
09/20/04 JWF

NOTE:
THE CONTENTS OF THESE PLANS ARE INTENDED EXCLUSIVELY FOR THE PURPOSE OF OBTAINING ENVIRONMENTAL COMPLIANCE PERMITS.

*BASED ON X-SECTION DATA OBTAINED BY C H FESNTERMAKER & ASSOC. ON 5/20/03.

Application By:

WESTPORT OIL & GAS COMPANY, LP

April 19, 2004

2044563 i:/infocad/rangew/11S13W 80

PROPOSED CLEANOUT, SLIP, SHELL PAD, PIPELINES & STRUCTURES

For Drilling *E. W. Brown, Jr.* Nos. 1, 2 & 3 Wel

Sections 17 & 20, T11S-R13W

Calcasieu Parish, Louisiana

PREPARED BY: C.H. Fenstermaker & Associates, Inc., Lafayette & New Orleans, Louisiana, & Houston, Texas

SHEET 5 OF 5 SHEETS

TOTAL CLEANOUT REQUIRED	1,620 CU YDS.
TOTAL EXCAVATION REQUIRED	11,925 CU YDS.
FILL REQUIRED FOR SHELLPAD	1,258 CU YDS.

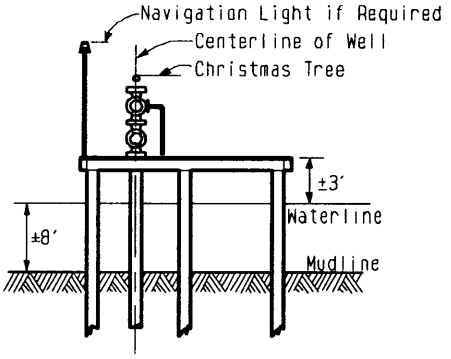

To be constructed upon successful completion of well.

TYPICAL 10' x 20' WELL PROTECTOR PLATFORM

No Scale

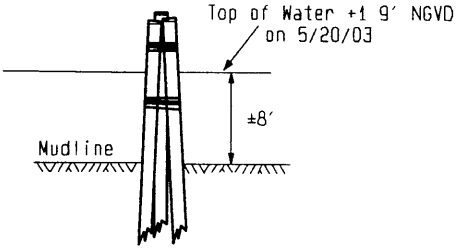

3 PILE CLUSTER

No Scale

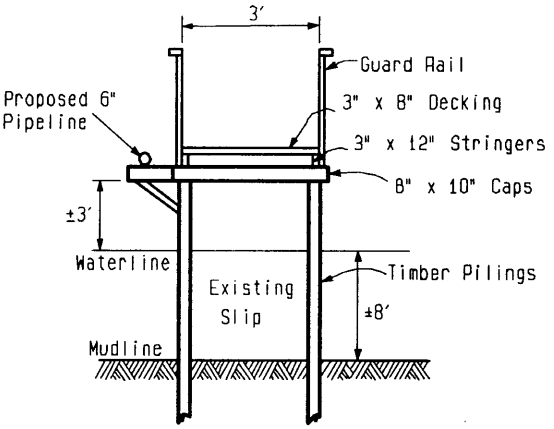

TYPICAL WALKWAY (OVER WATER)

No Scale

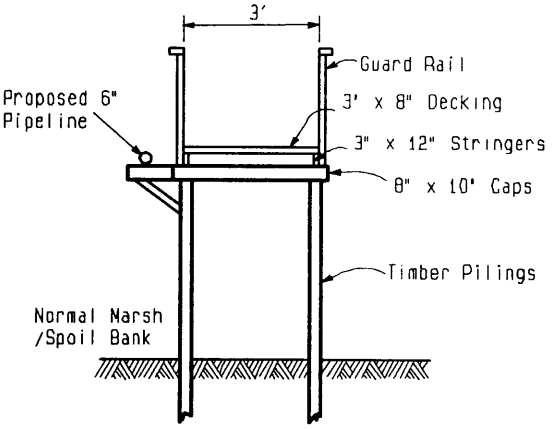

TYPICAL WALKWAY (OVER MARSH/SPOIL)

No Scale

NOTES:

NOTE.
THE CONTENTS OF THESE PLANS ARE INTENDED EXCLUSIVELY FOR THE PURPOSE OF OBTAINING ENVIRONMENTAL COMPLIANCE PERMITS.

REVISED: 04/28/04 JWF, 5/3/04 JWF
09/20/04 JWF

1. In order to insure the safety of all parties, the permittee shall contact the Louisiana ONE CALL System (1-800-272-3020), a minimum of 48 hours prior to the commencement of any excavation (Digging, Dredging, Jetting, etc.) or demolition activity
2. Structures will also be marked/lighted in accordance with U.S. Coast Guard regulations.

Application By:

WESTPORT OIL & GAS COMPANY, LP

April 19, 2004

2044563 i:/infocad/rangew/11S13W 80

PROPOSED CLEANOUT, SLIP, SHELL PAD, PIPELINES & STRUCTURES

For Drilling *E. W. Brown, Jr.* Nos. 1, 2 & 3 Wel

Sections 17 & 20, T11S-R13W

Calcasieu Parish, Louisiana

PREPARED BY: C. H. Fenstermaker & Associates, Inc., Lafayette & New Orleans, Louisiana, & Houston, Texas