OCT 23 2006

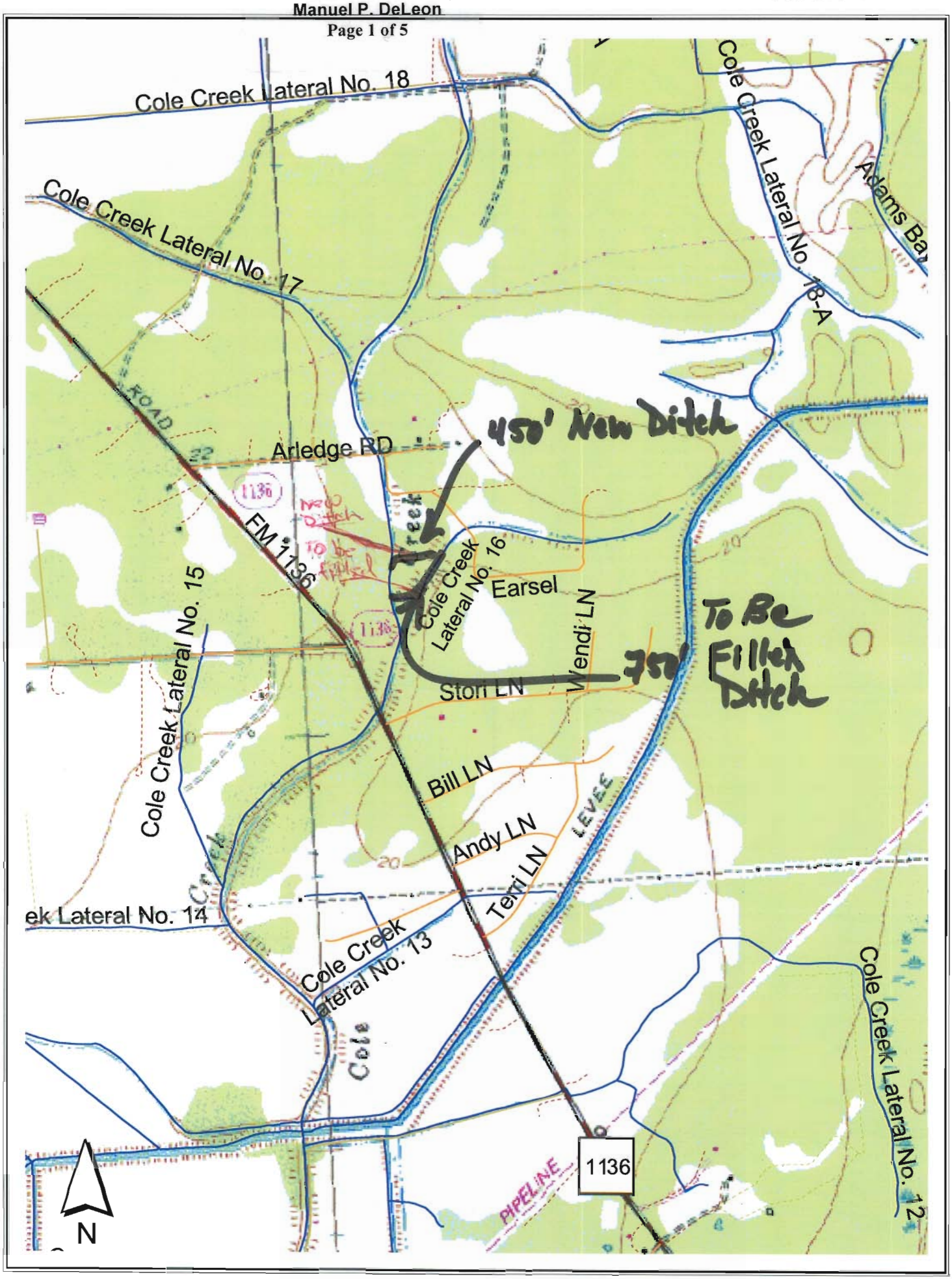
Cole Creek Lateral No. 18
Cole Creek Lateral No. 17
Cole Creek Lateral No. 18-A
Adams Ba
ROAD
Arledge RD
450' New Ditch
1136
FM 1136
Cole Creek Lateral No. 16
Earsel
Wendi LN
To Be Filled Ditch
750'
Stori LN
Cole Creek Lateral No. 15
Bill LN
Andy LN
Terri LN
LEVEE
ek Lateral No. 14
Cole Creek Lateral No. 13
Cole Creek Lateral No. 12
PIPELINE
1136
N

OCT 2 3 2006

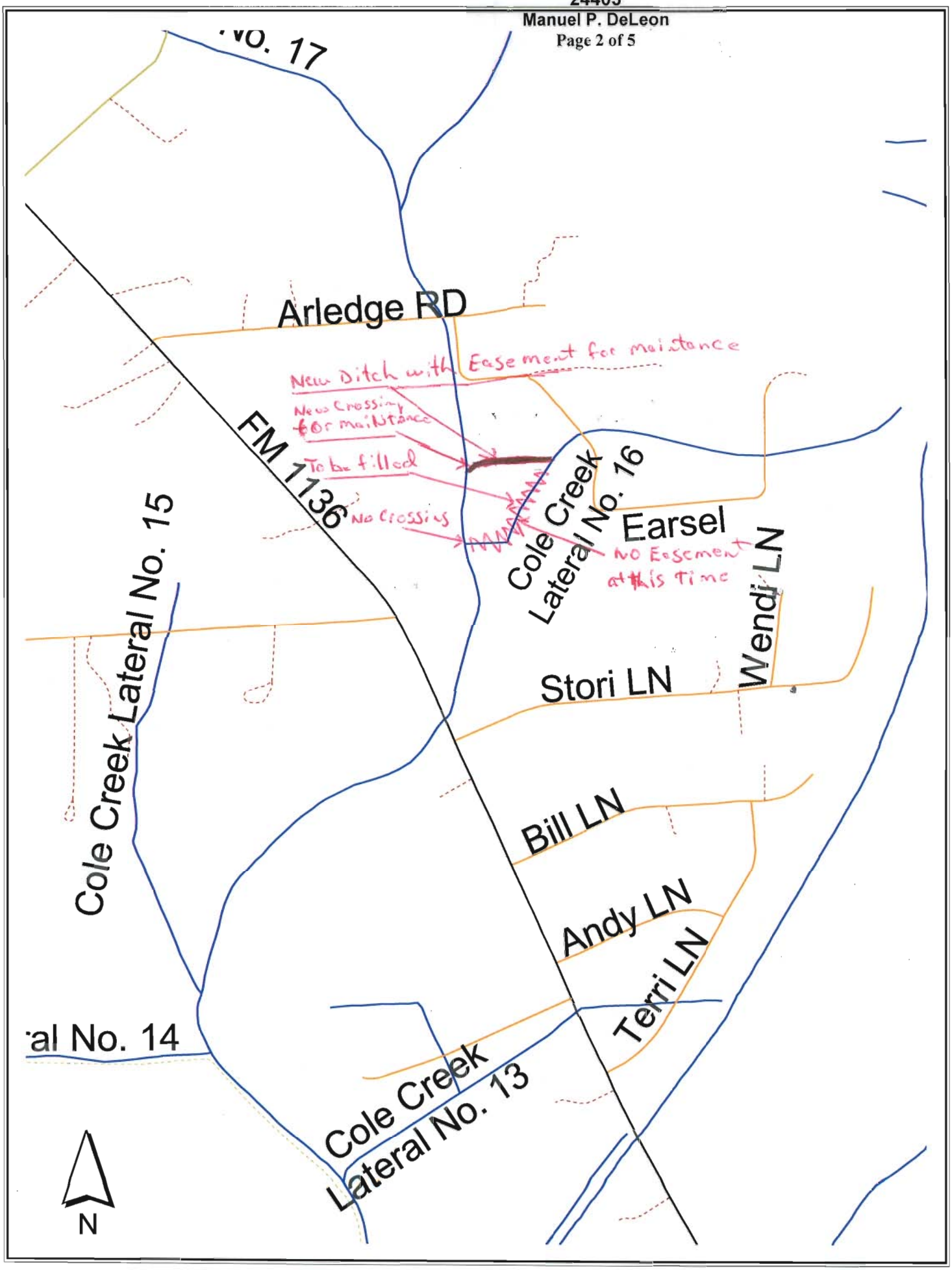
'VO. 17
Arledge RD
New Ditch with Easement for maintance
New Crossing for maintance
To be filled
No Crossing
No Easement at this Time
FM 1136
Cole Creek Lateral No. 16
Earsel
Wendi LN
Cole Creek Lateral No. 15
Stori LN
Bill LN
Andy LN
Terri LN
'al No. 14
Cole Creek Lateral No. 13
N

Cole Creek

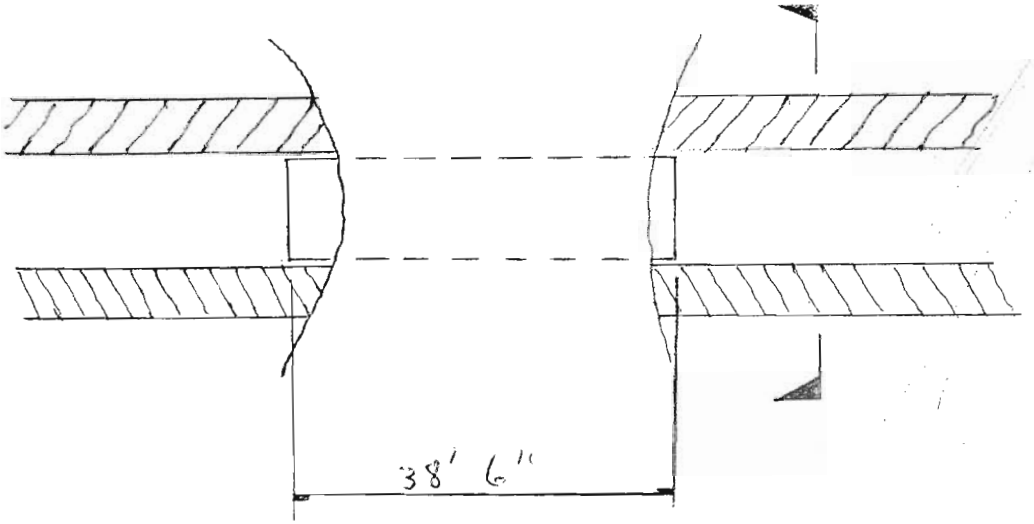

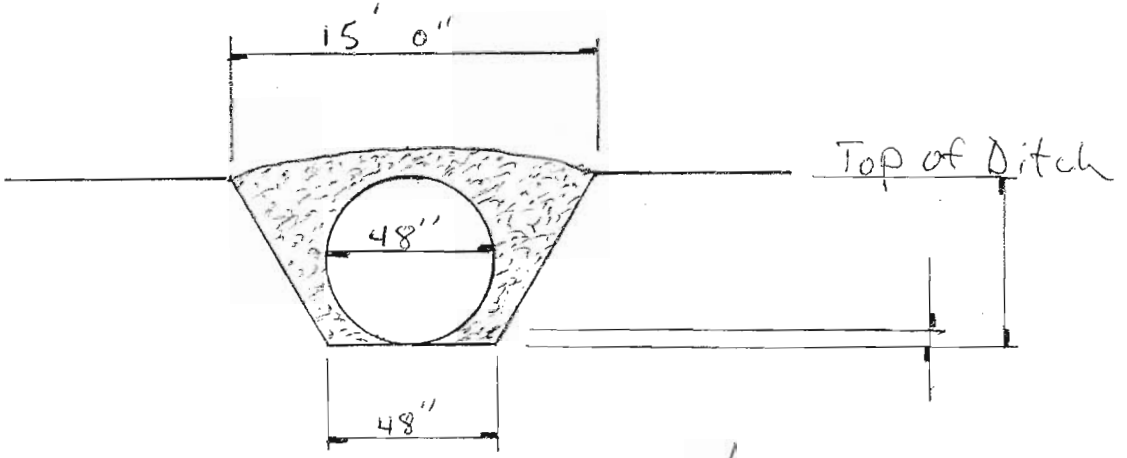

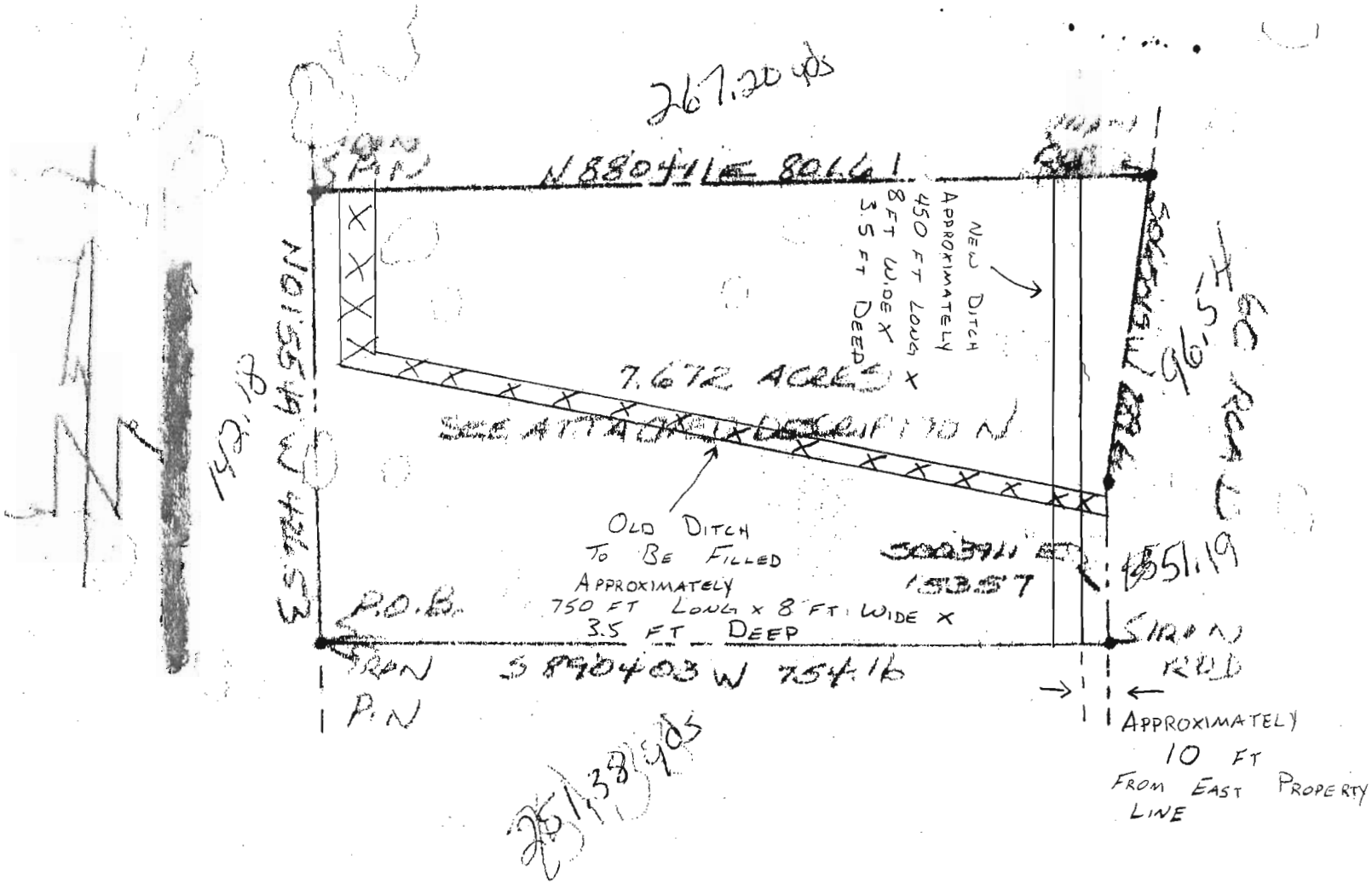
267.20 yds
N 88041 E 80.61
NEW DITCH
APPROXIMATELY
450 FT LONG X
8 FT WIDE X
3.5 FT DEEP
7.672 ACRES
SEE ATTACHED DESCRIPTION
OLD DITCH
TO BE FILLED
APPROXIMATELY
750 FT LONG x 8 FT WIDE X
3.5 FT DEEP
S 00391 E
153.57
1551.19
P.O.B.
S 89 04 03 W 754.16
IRON
PIN
APPROXIMATELY
10 FT
FROM EAST PROPERTY
LINE
251.38 yds

REVISIONS				
ZONE	REV	DESCRIPTION	DATE	APPROVED

Existing Drainage Ditch Dimensions

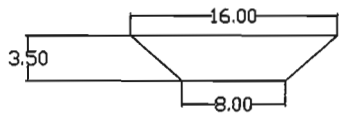

Approximate Current Length of Existing Drainage Ditch = 750 ft

Approximate Cross-Sectional Area of Drainage Ditch = 42 sq ft

Approximate Volume of Fill Material Needed = 31500 cubic ft or 1167 cubic yards

Proposed Drainage Ditch Dimensions

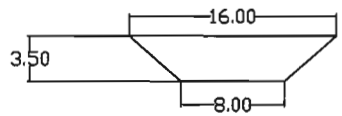

Approximate Length of Proposed Drainage Ditch = 450 ft

Approximate Cross-Sectional Area of Drainage Ditch = 42 sq ft

Approximate Volume of Material To Be Removed = 18900 cubic ft or 700 cubic yards

LATERAL No 16 FOR COLE CREEK

Aaron Hudson

SIZE	FSCM NO.	DWG NO.	REV
SCALE NONE		SHEET	