Topographic Map
QIC Pier Protection CSJ 0331-04-047
Permit Application 22504 (01)

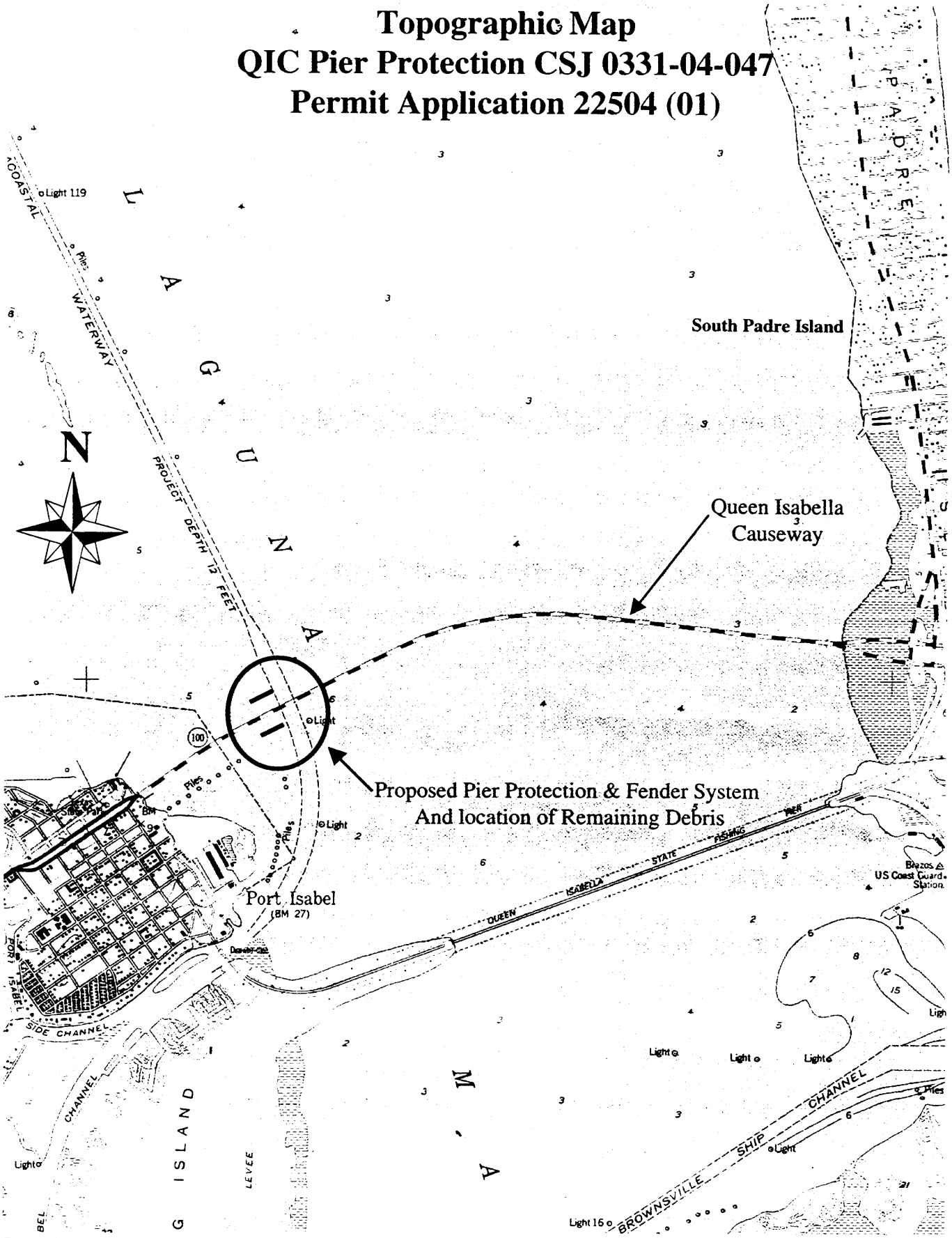

Port Isabel Quad Map1955/Photorevised1982

22504(01) TxDOT
LAGUNA MADRE, CAMERON Co., Tx
SHEET 1 OF 6 2/18/03

QIC PIER PROTECTION AND FENDER SYSTEM
PERMIT APPLICATION 22504(01)

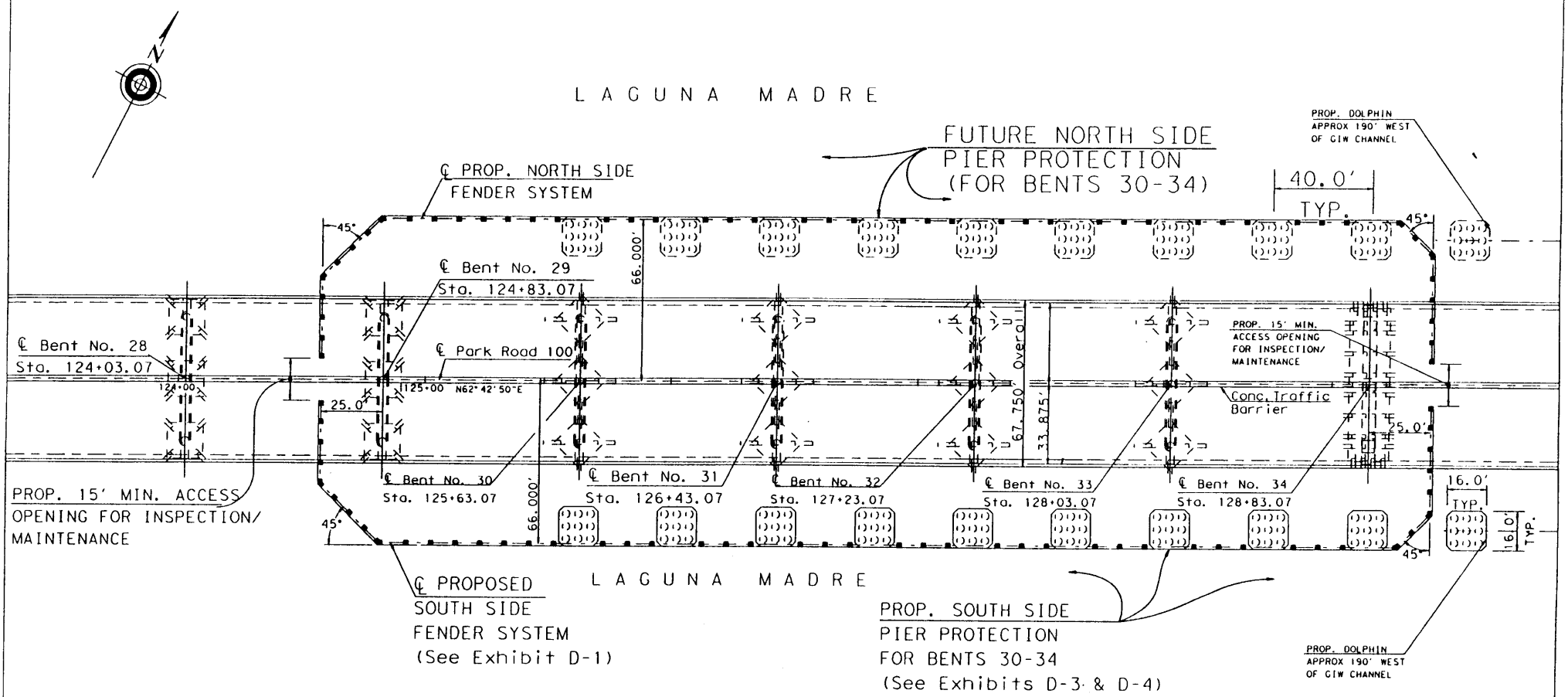

PLAN VIEW

EXHIBIT D

TEXAS DEPARTMENT OF TRANSPORTATION
PRELIMINARY FENDER SYSTEM
LAYOUT & DETAILS

QUEEN ISABELLA CAUSEWAY

6	STATE PROJECT NO. 331-04-047		SCALE : 1" = 40'			
STATE	STATE DIST. NO.	COUNTY	CONTROL	SECTION	JOB	HIGHWAY NO.
TEXAS	21	CAMERON	331	04	047	PR100

.../QIC Pier Protection.dgn 01/30/03 10:45:06 AM

22504(01) TxDOT
LAGUNA MADRE CAMERON Co., Tx
SHEET 2 OF 6 2/18/03

QIC PIER PROTECTION AND FENDER SYSTEM
PERMIT APPLICATION 22504(01)

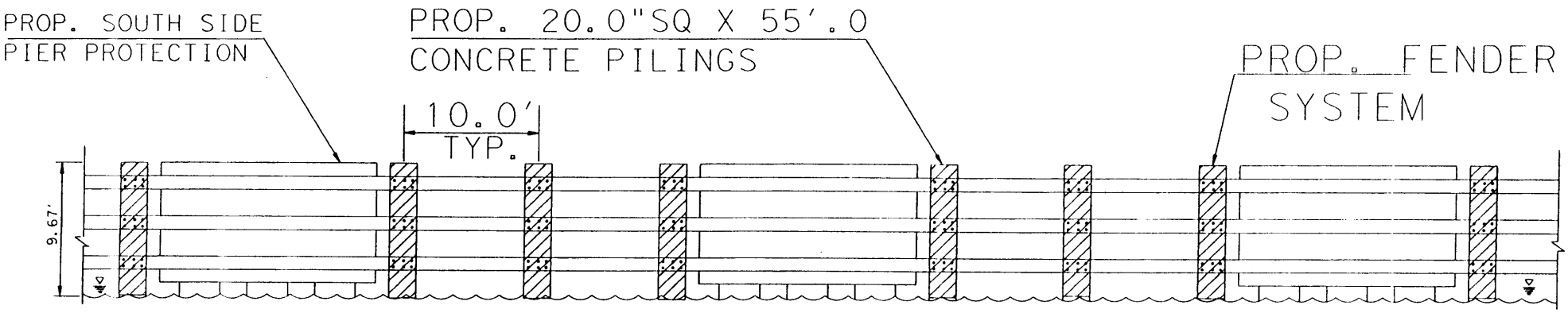

WATER DEPTH APPROX 12-FT
NGVD MSL 1929

PARTIAL SIDE VIEW

SHOWING SOUTH SIDE FENDER SYSTEM W/PIER PROTECTION

EXHIBIT D-1

© 2002
TEXAS DEPARTMENT OF TRANSPORTATION
PRELIMINARY FENDER SYSTEM
LAYOUT & DETAILS

QUEEN ISABELLA CAUSEWAY

6	331-04-047	SCALE : 1" = 40'				
STATE	STATE DIST. NO.	COUNTY	CONTROL	SECTION	JOB	HIGHWAY NO.
TEXAS	21	CAMERON	331	04	047	PR100

.../QIC Pier Protection.dgn 01/30/03 10:45:58 AM

22504(01) TxDOT
LAGUNA MADRE CAMERON Co., Tx
SHEET 3 OF 6 2/18/03

QIC PIER PROTECTION AND FENDER SYSTEM
PERMIT APPLICATION 22504(01)

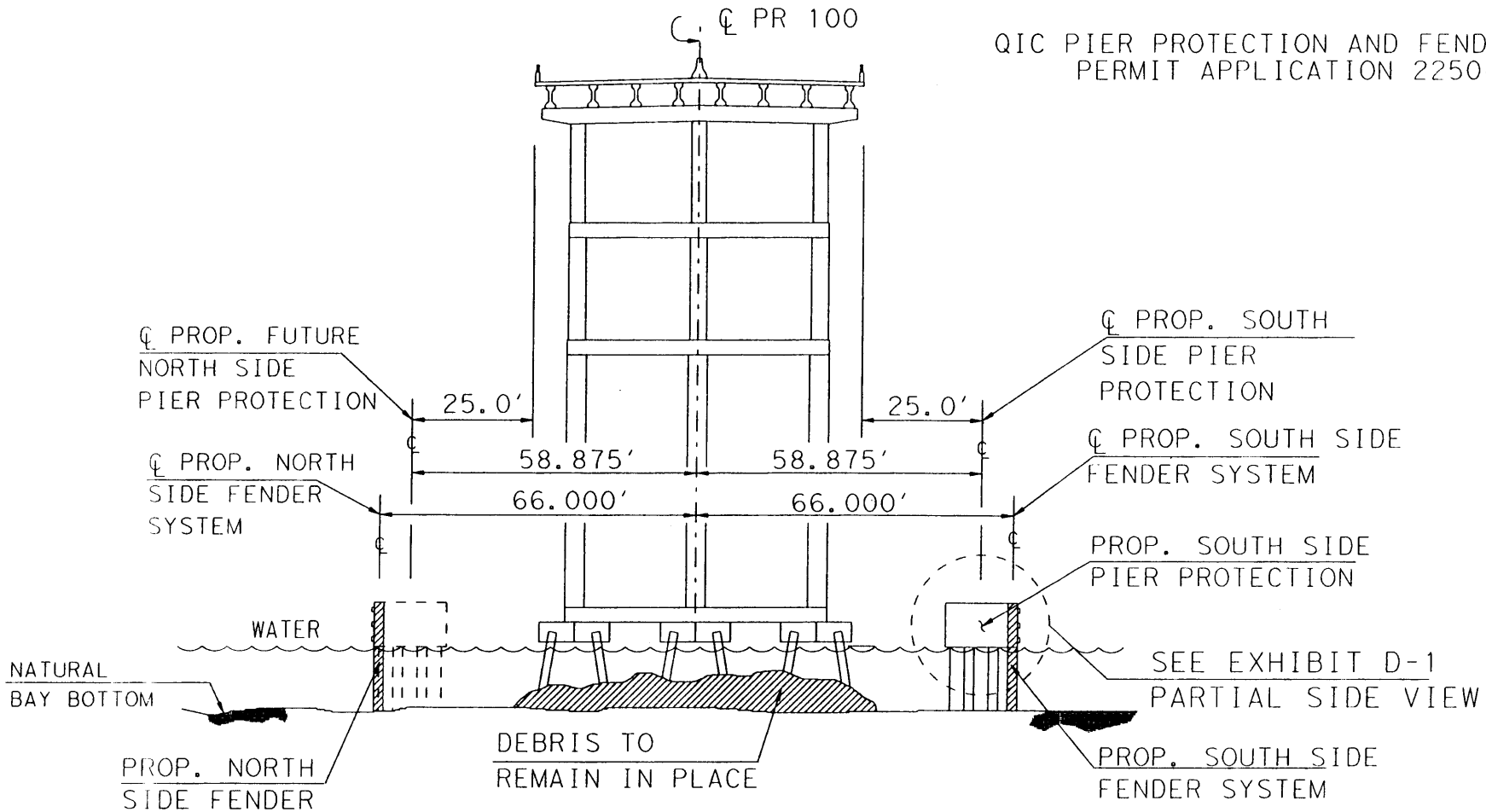

TYPICAL SECTION

DEBRIS TO REMAIN IN PLACE APPROX. 1 ACRE

WATER DEPTH APPROX 12-FT NGVD MSL 1929

EXHIBIT D-2

© 2002

TEXAS DEPARTMENT OF TRANSPORTATION

PRELIMINARY FENDER SYSTEM LAYOUT & DETAILS

QUEEN ISABELLA CAUSEWAY

STATE	STATE DIST. NO.	COUNTY	CONTROL	SECTION	JOB	HIGHWAY NO.
TEXAS	21	CAMERON	331	04	047	PR100

STATE PROJECT NO. 331-04-047

SCALE 1" = 40'

SHEET 6

.../QIC Pier Protection.dgn 01/30/03 10:46:53 AM

22504(01) TxDOT
LAGUNA MADRE CAMERON Co., Tx
SHEET 4 OF 6 2/18/03

QIC PIER PROTECTION AND FENDER SYSTEM
PERMIT APPLICATION 22504(01)

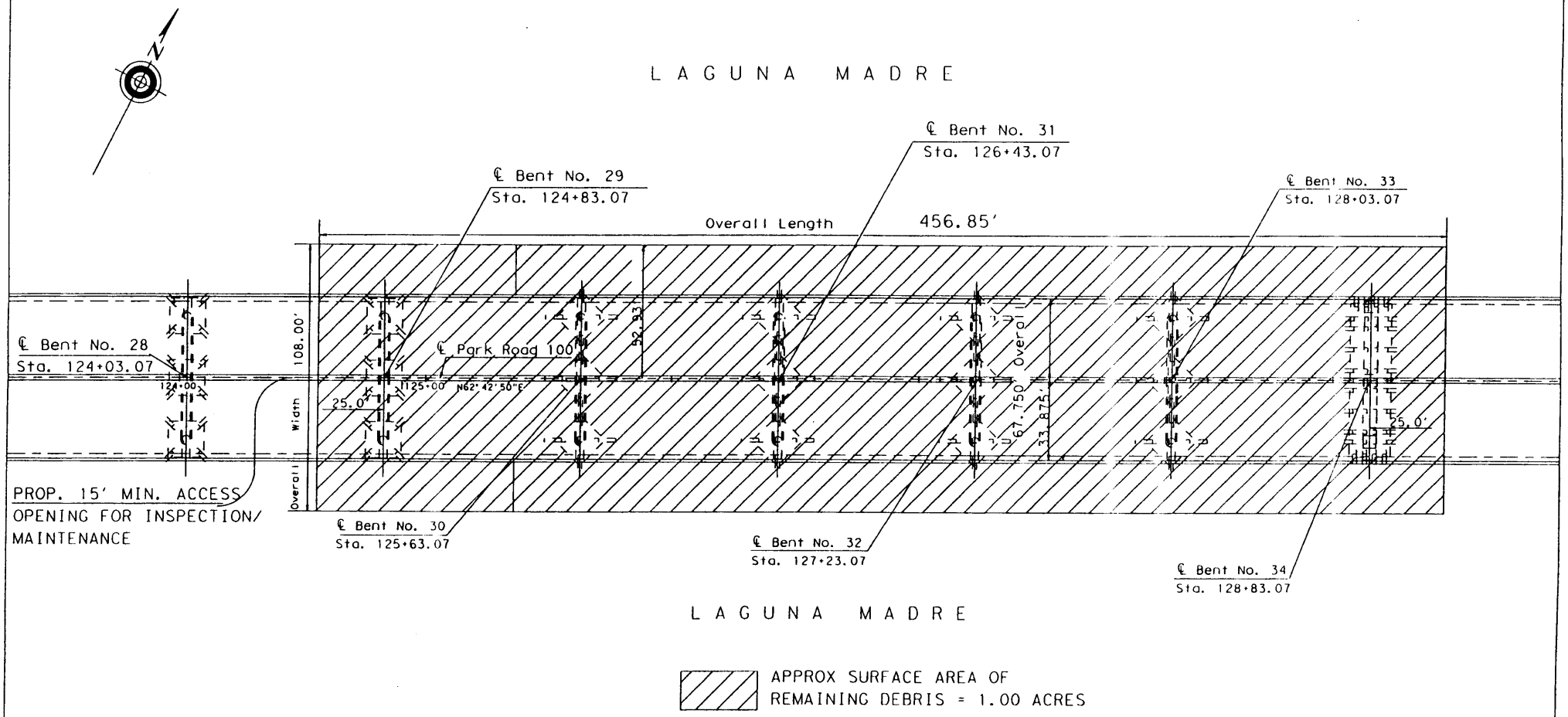

EXHIBIT D-5

PLAN VIEW

TEXAS DEPARTMENT OF TRANSPORTATION
PRELIMINARY FENDER SYSTEM
LAYOUT & DETAILS
QUEEN ISABELLA CAUSEWAY

SHEET NO. OF NO.	STATE PROJECT NO.					
6	331-04-047	SCALE 1" = 40'				
STATE	STATE DIST. NO.	COUNTY	CONTROL	SECTION	JOB	HIGHWAY NO.
TEXAS	21	CAMERON	331	04	047	PR100

.../QIC Pier Protection.dgn 01/30/03 11:23:03 AM

22504(01) TxDOT
LAGUNA MADRE CAMERON Co., Tx
SHEET 5 OF 6 2/18/03

QIC Dolphin Details

Permit Application 22504(1)

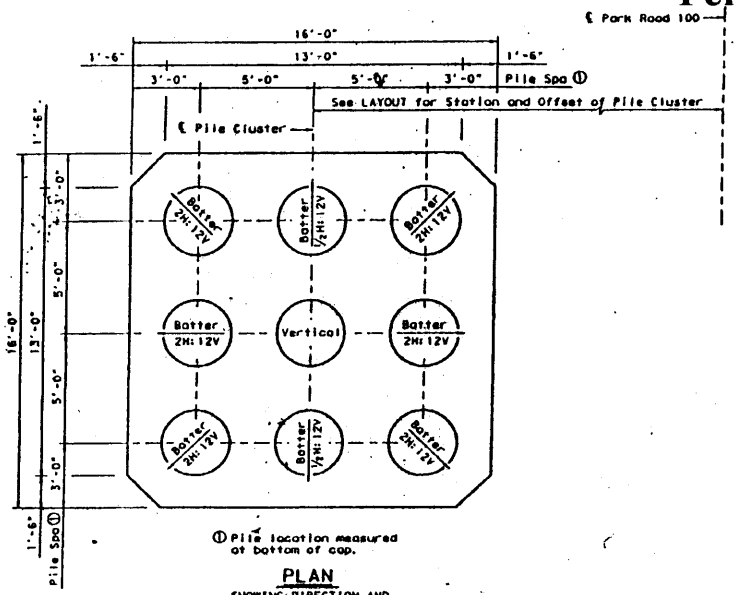

① Pile location measured at bottom of cap.

PLAN

SHOWING DIRECTION AND AMOUNT OF PILE BATTER

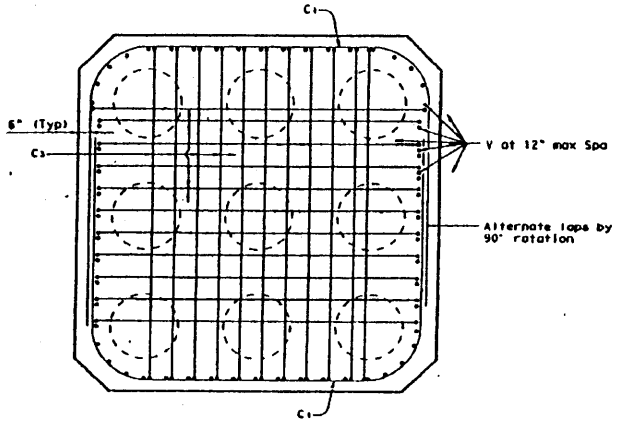

PLAN

SHOWING TOP REINFORCING

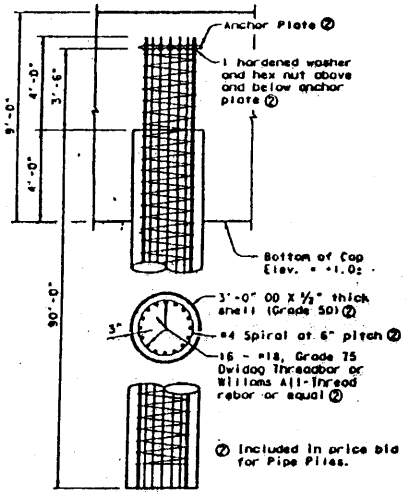

PIPE PILE DETAIL

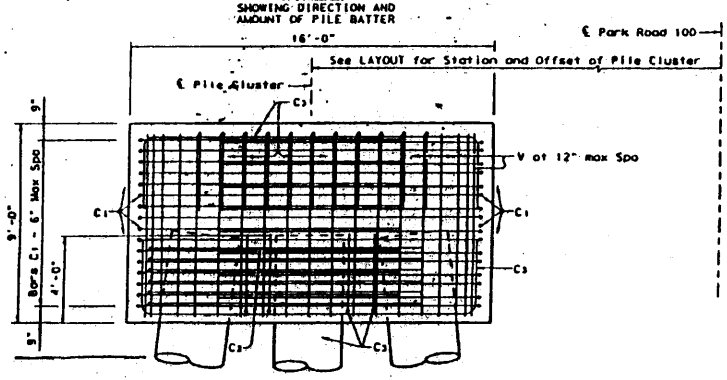

ELEVATION

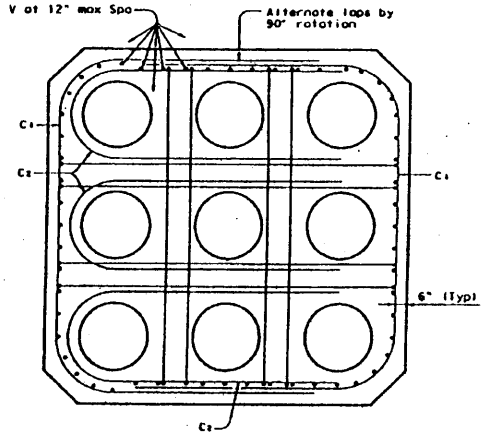

PLAN

SHOWING BOTTOM REINFORCING

GENERAL NOTES:

The pipe pile shell and anchor plate shall be fabricated of Grade 50 material, meeting the requirements of ASTM A588, A572 Grade 50, or A607 Grade 50 Class 2. The pipe pile shell may be fabricated 12-sided with an outside dimension of 3'-0" and wall thickness of 1/2". The upper 25 feet of the pipe pile shell shall be hot-dipped galvanized.

Reinforcing steel in the pipe pile shall be Grad 75, and shall be Dywidag Threadbar or Williams All-Thread Rebar. Concrete in pipe pile shall be Class "SS" with Coarse Aggregate Grade 4,5 or 6.

Concrete in concrete cap shall be Class "C". Reinforcing steel in concrete cap shall be Grade 60.

Exhibit D-3

HS20 LOADING SHEET 1 OF

Texas Department of Transportation
Bridge Division

QUEEN ISABELLA CAUSEWAY

FILE: 6252ni01.dgn	DN: WPM	CK:	DW: RMP
© TxDOT APRIL 2002	DISTRICT: 21	FEDERAL AID PROJECT	
REVISIONS	COUNTY: CAMERON	SHEET NO. 8321	DESIGN: pa

22504(01) TxDOT
LAGUNA MADRE CAMERON Co., TX
SHEET 6 OF 6 2/18/03