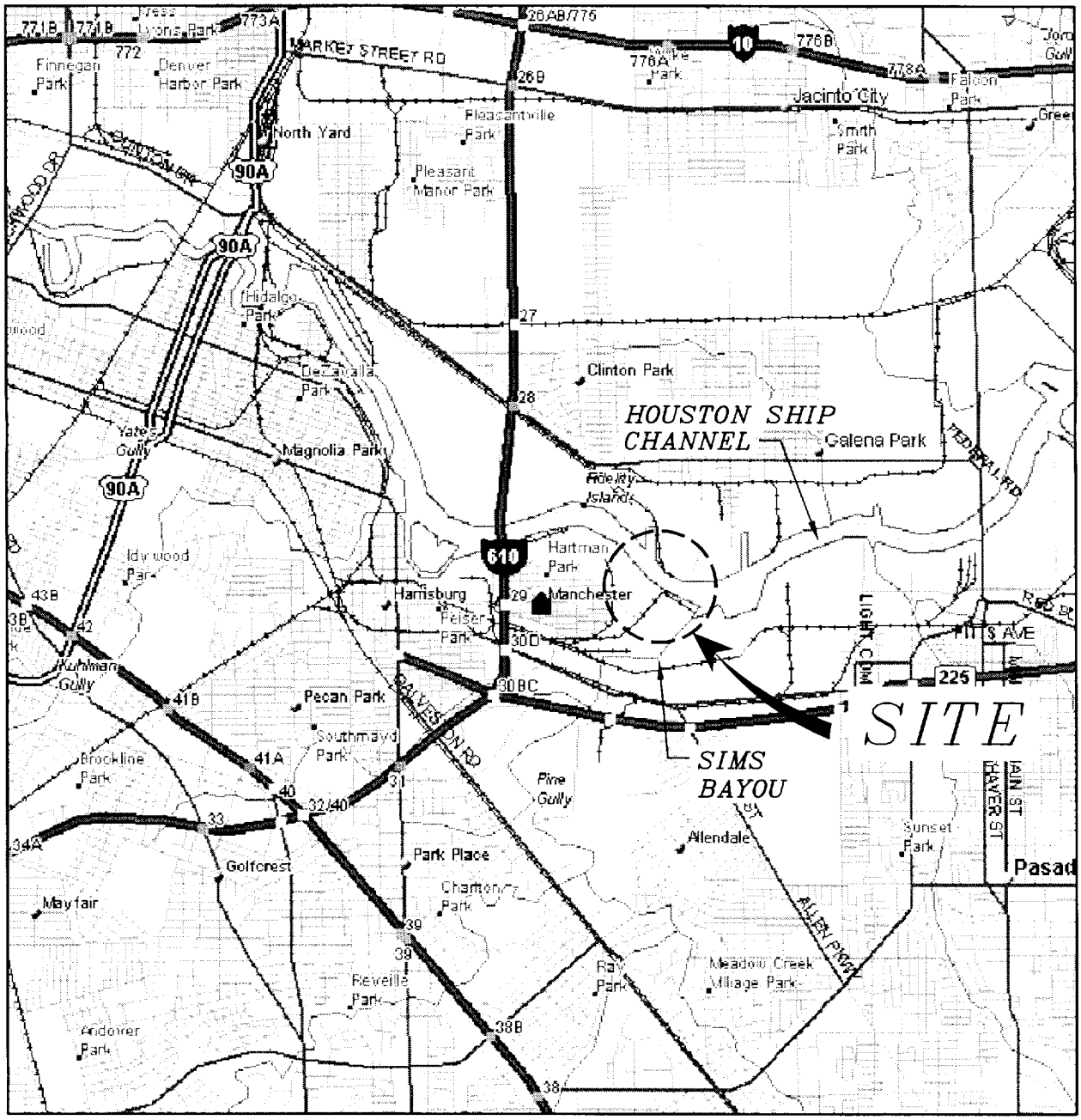

VICINITY MAP

0 1/2 1 2

SCALE MILES

6096-P1

LANIER & ASSOCIATES
CONSULTING ENGINEERS
INCORPORATED
NEW ORLEANS, LA · HOUSTON, TX

VALERO REFINING COMPANY
HOUSTON TEXAS

DATE NOV. '02
DESIGN RKA
KA
OC
096

22950
Valero Refining, Houston
Page 1 of 10

8

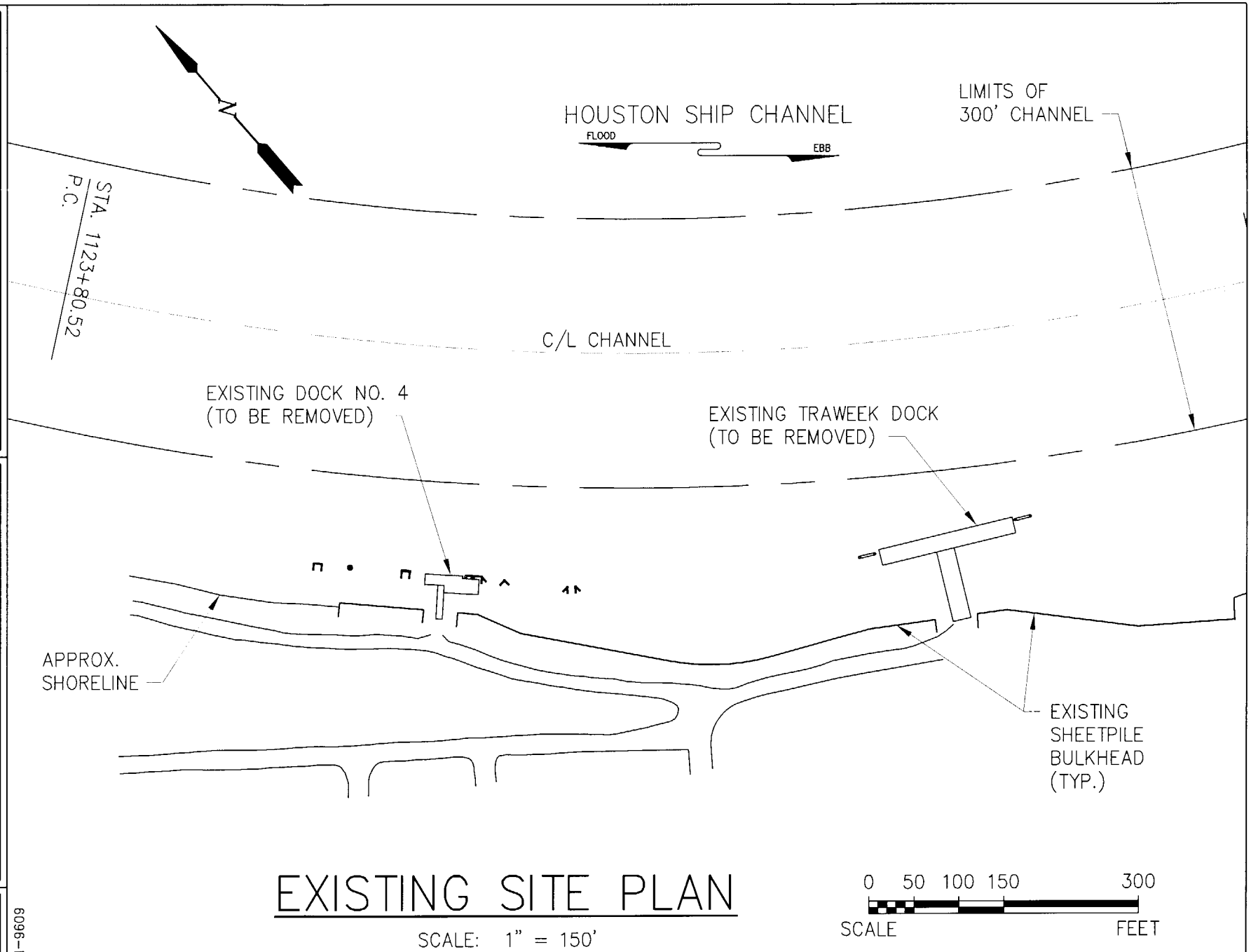

EXISTING SITE PLAN

SCALE: 1" = 150'

6096-P2-P4

DATE DEC. '02
DESIGN NOC

LANIER & ASSOCIATES
CONSULTING ENGINEERS
INCORPORATED
NEW ORLEANS, LA · HOUSTON, TX

HOUSTON **VALERO REFINING COMPANY** TEXAS

22950
Valero Refining, Houston
Page 2 of 10

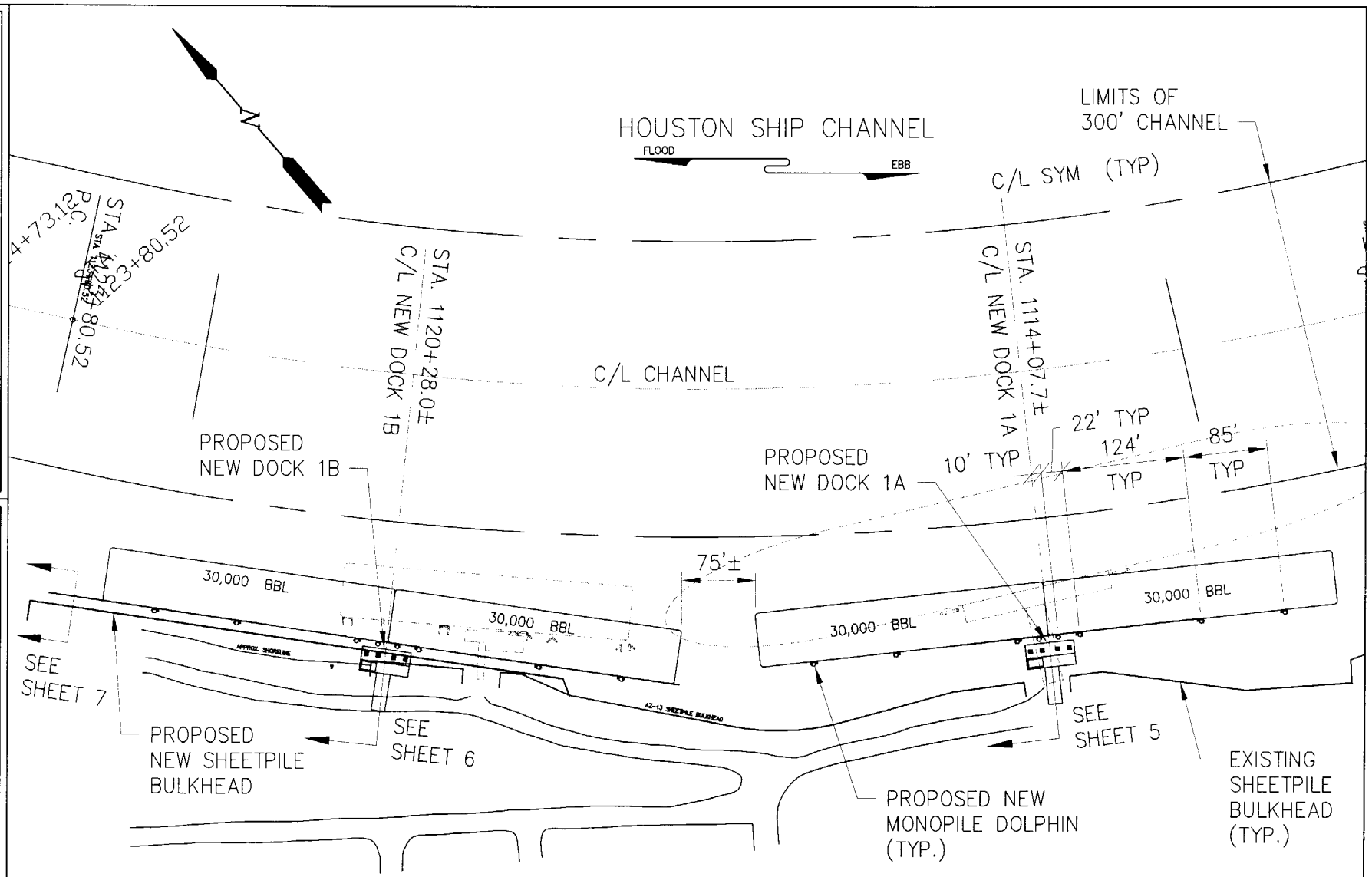

PROPOSED NEW SITE PLAN

SCALE: 1" = 150'

0 50 100 150 300
SCALE FEET

6096-P2-P4

LANIER & ASSOCIATES
CONSULTING ENGINEERS
INCORPORATED
NEW ORLEANS, LA HOUSTON

22950
Valero Refining, Houston
Page 3 of 10

VALERO REFINING COMPANY

DATE DEC. '02
NOC
AP
IOC
6096
8

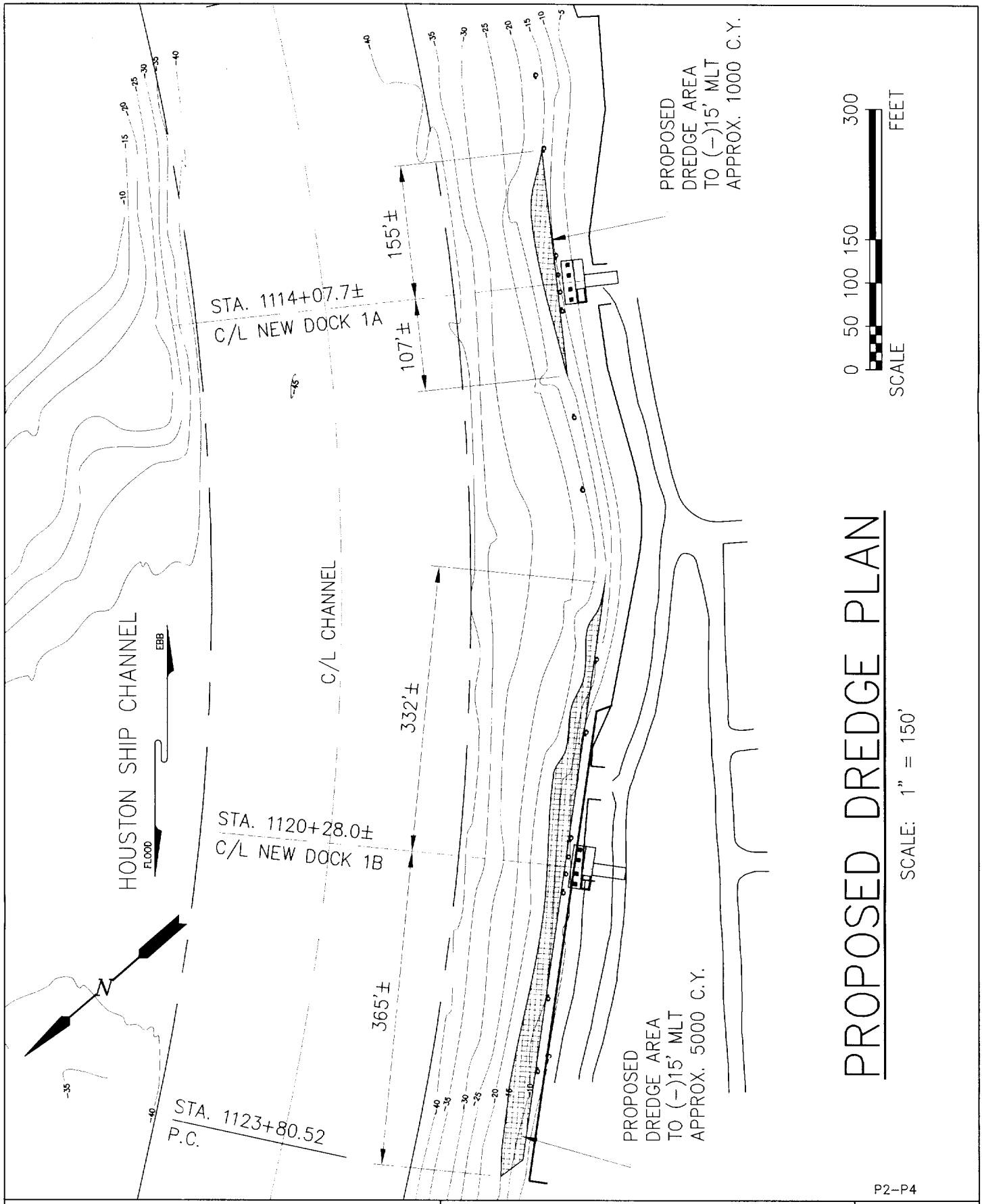

P2-P4

LANIER & ASSOCIATES
CONSULTING ENGINEERS
INCORPORATED
NEW ORLEANS, LA

VALERO REFINING COMPANY
HOUSTON TEXAS

DATE DEC. '02
DESIGN NOC
DRAWN CAP
CHECK NOC
CONTRACT 6096
SHEET No.
4 OF 8

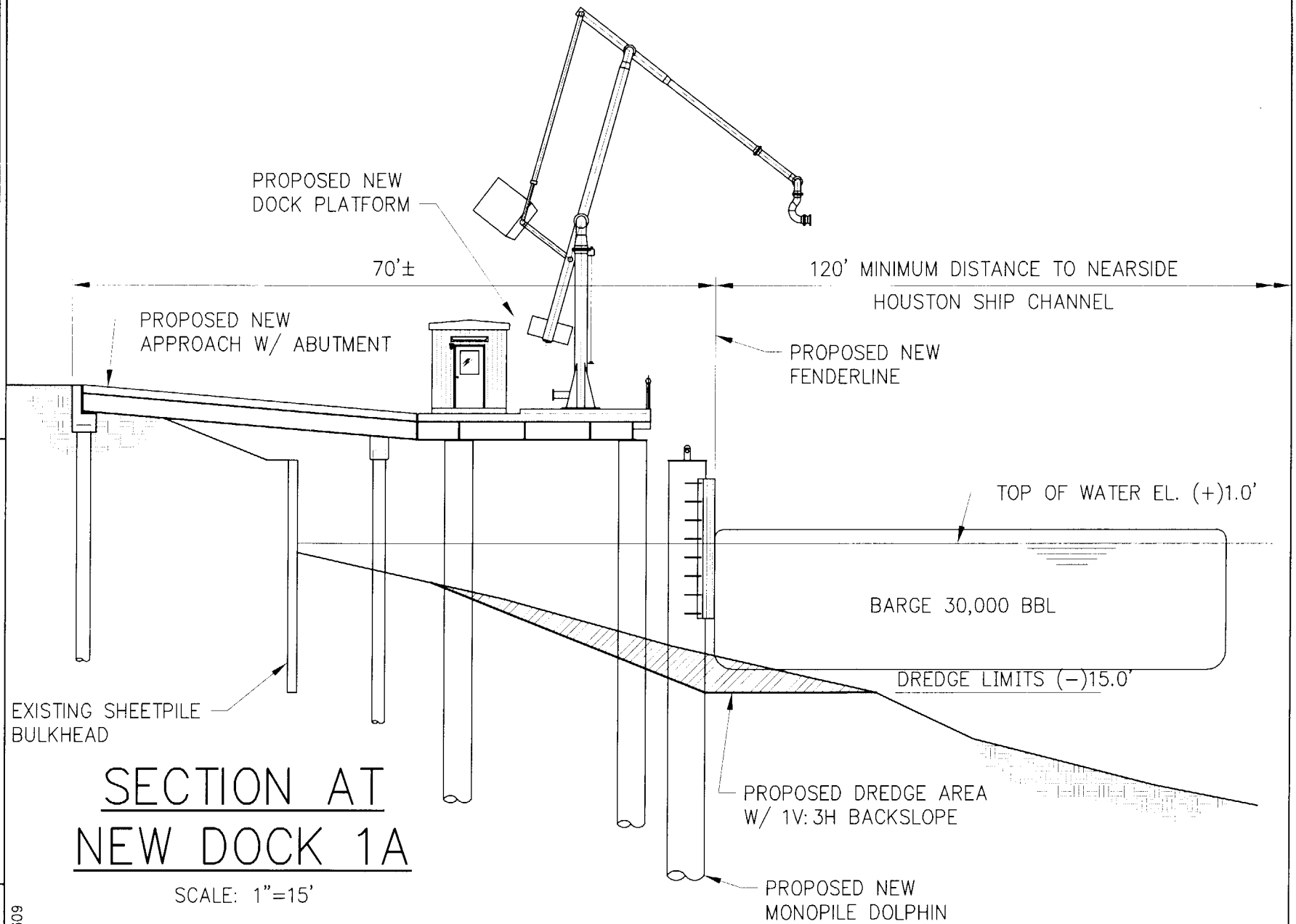

SECTION AT NEW DOCK 1A

SCALE: 1"=15'

6096-P5-P7

VALERO REFINING COMPANY

LANIER & ASSO
CONSULTING ENG
INCORPORATE
NEW ORLEANS, LA

22950
Valero Refining, Houston
Page 5 of 10

DATE NOV. '02
DESIGN NOC
DN KL/CP
CK NOC
RACT6096
T No.
OF 8

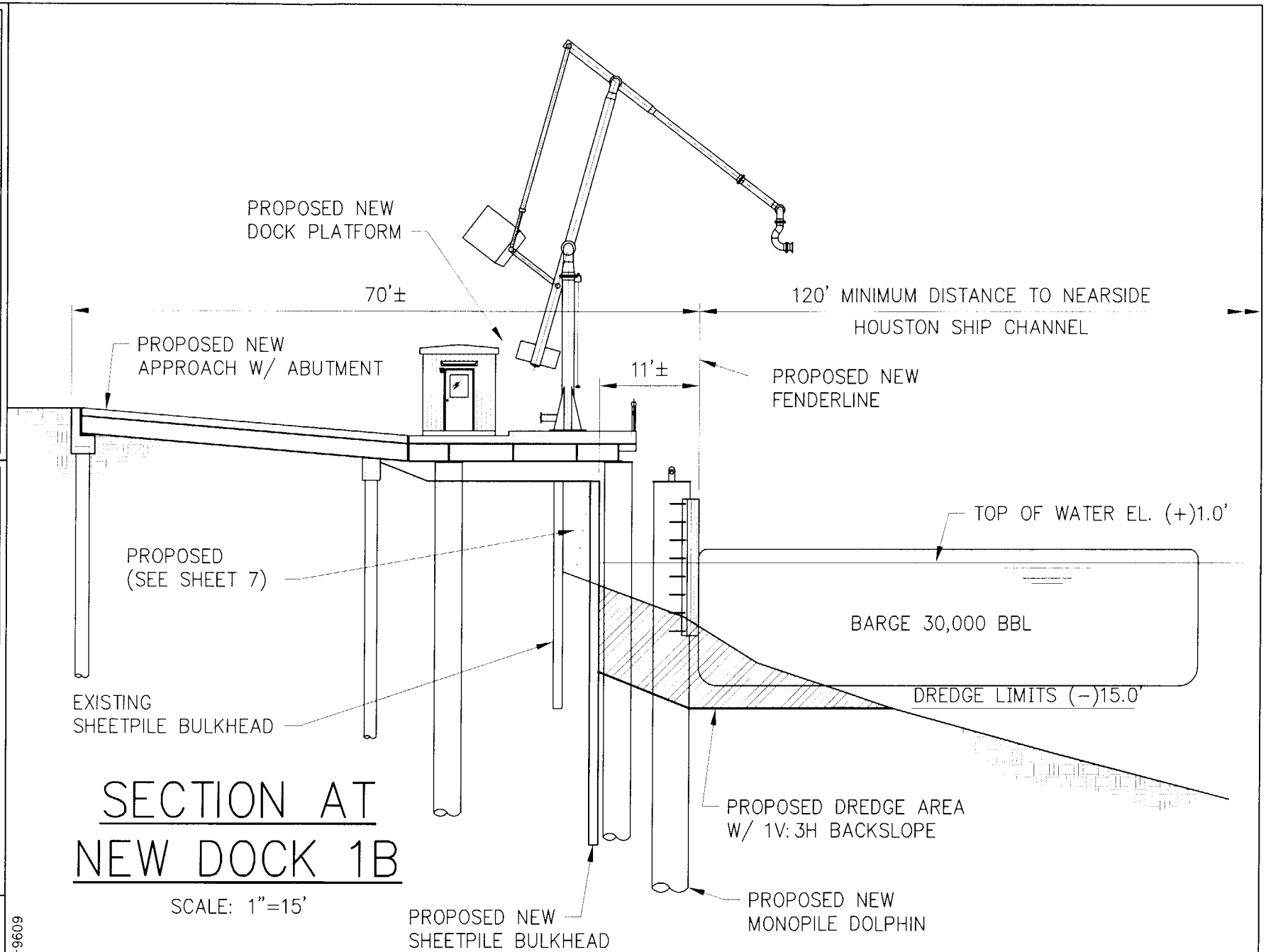

LANIER & ASSOCI
CONSULTING ENGINI
INCORPORATED
NEW ORLEANS, LA · HOUSTO

22950
Valero Refining, Houston
Page 6 of 10

VALERO REFINING CORPORATION

DATE NOV. '02
DESIGN NOC
KL/CP
NOC
T6096
8

6096-P5-P7

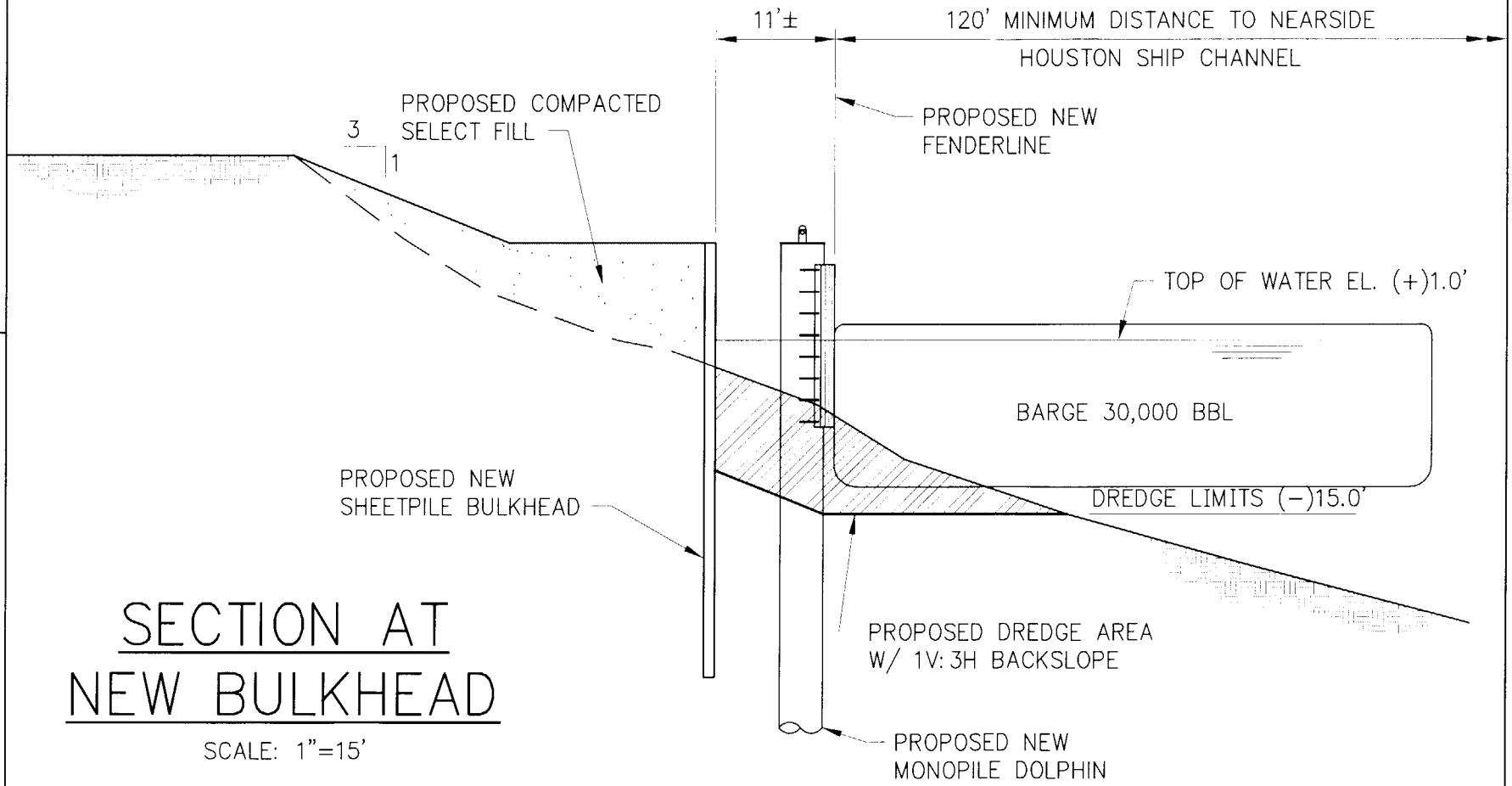

SECTION AT NEW BULKHEAD

SCALE: 1"=15'

LANIER & ASSOCIATES
CONSULTING ENGINEERS
INCORPORATED
NEW ORLEANS, LA · HOUSTON, TEXAS

VALERO REFINING COMPANY

DATE NOV '02
DESIGN NOC
/CP
C
96

6096-P5-P7

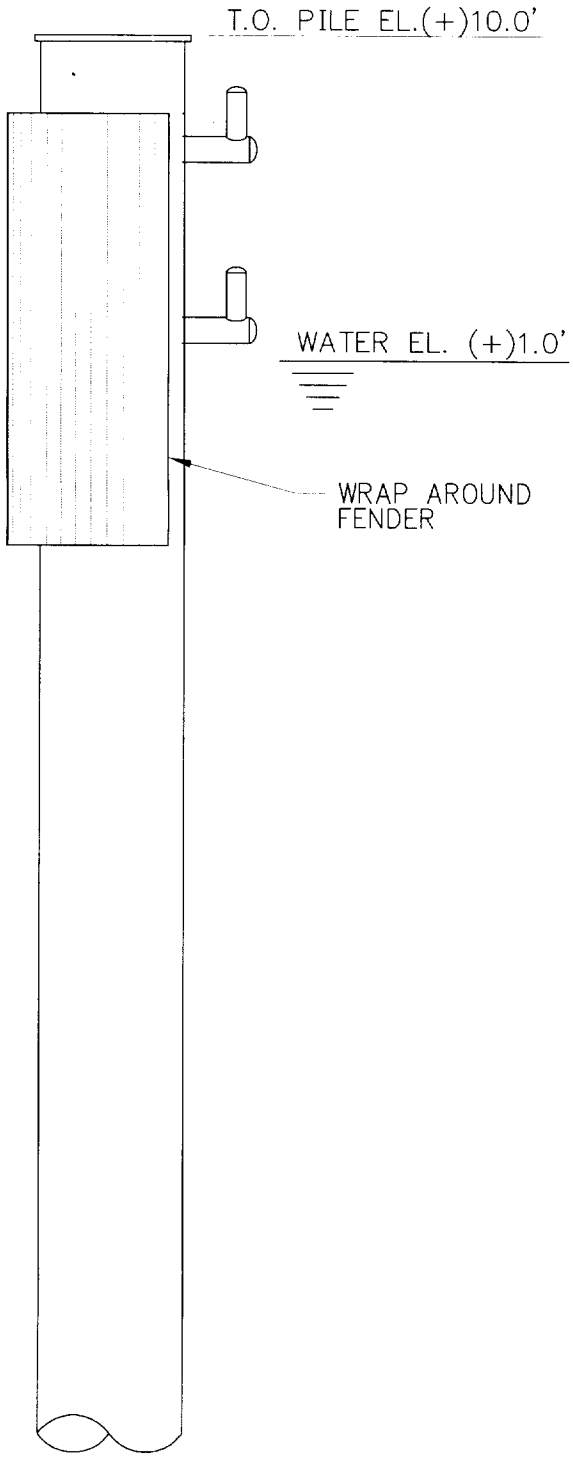

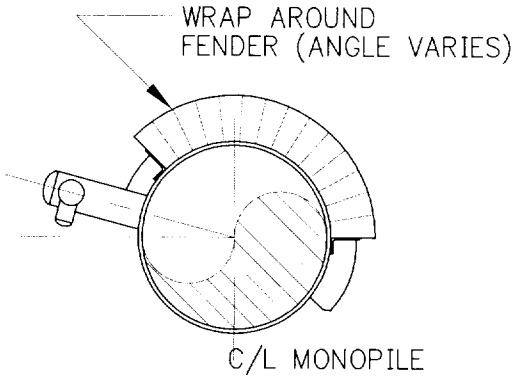

BREASTING DOLPHIN MONOPILE

SCALE: 1/4"=1'-0"

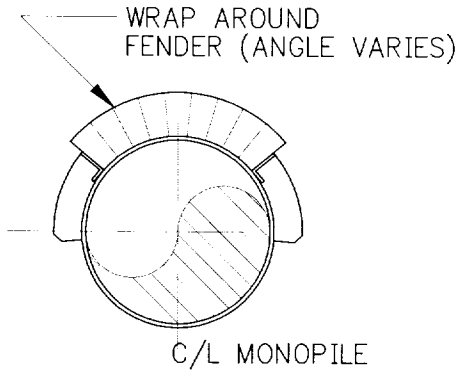

PROTECTION DOLPHIN MONOPILE

SCALE: 1/4"=1'-0"

6085-P11

LANIER & ASSOCIATES
CONSULTING ENGINEERS
INCORPORATED
NEW ORLEANS, LA · HOUSTON, TX

VALERO REFINING COMPANY

DATE NOV. '02

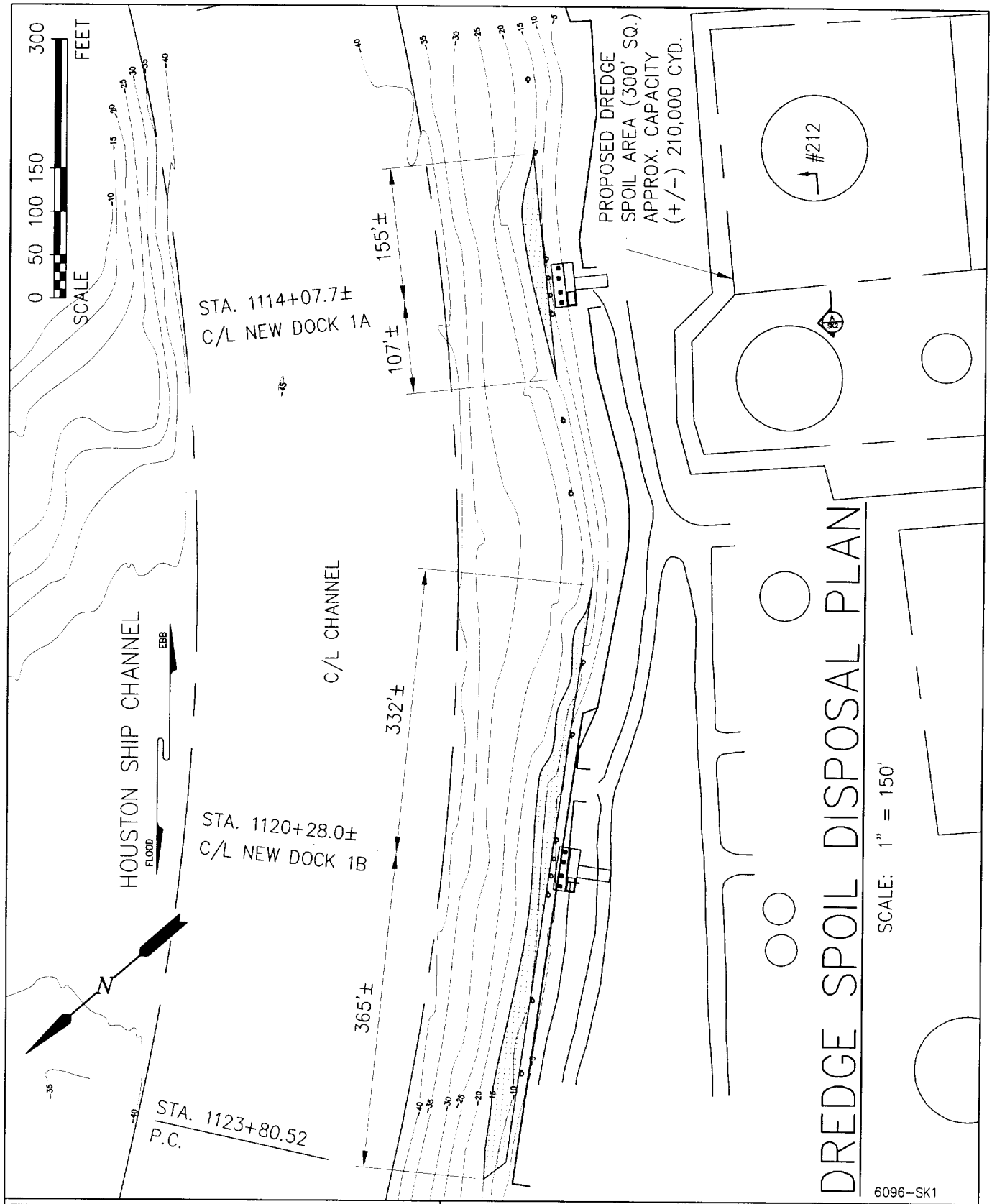

LANIER & ASSOCIATES
CONSULTING ENGINEERS
INCORPORATED
NEW ORLEANS, LA · HOUSTON, TX

VALERO REFINING COMPANY
HOUSTON TEXAS

HOUSTON SHIP CHANNEL
PROPOSED NEW BARGE DOCKS

DATE JAN. '03
DESIGN NOC
DRAWN CAP
CHECK NOC
CONTRACT 6096
SHEET No. 2

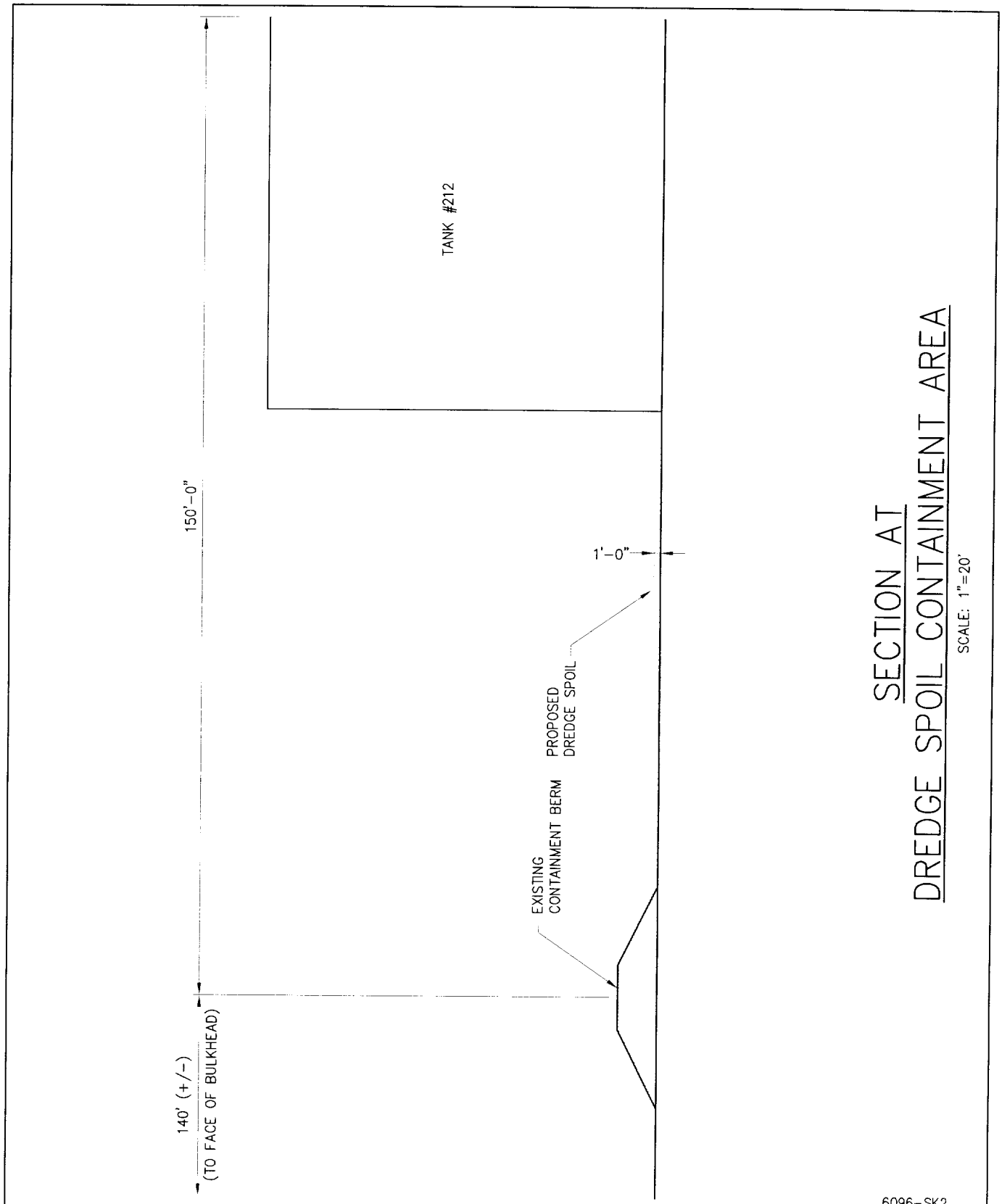

6096-SK2

LANIER & ASSOCIATES
CONSULTING ENGINEERS
INCORPORATED
NEW ORLEANS, LA · HOUSTON, TX

VALERO REFINING CORPORATION
HOUSTON TEXAS

HOUSTON SHIP CHANNEL
PROPOSED NEW BARGE DOCKS
PROPOSED DREDGE DISPOSAL SECTION

DATE NOV. '02
DESIGN NOC
DRAWN KL/CP
CHECK NOC
CONTRACT 6096
SHEET No.
SK2 OF 2