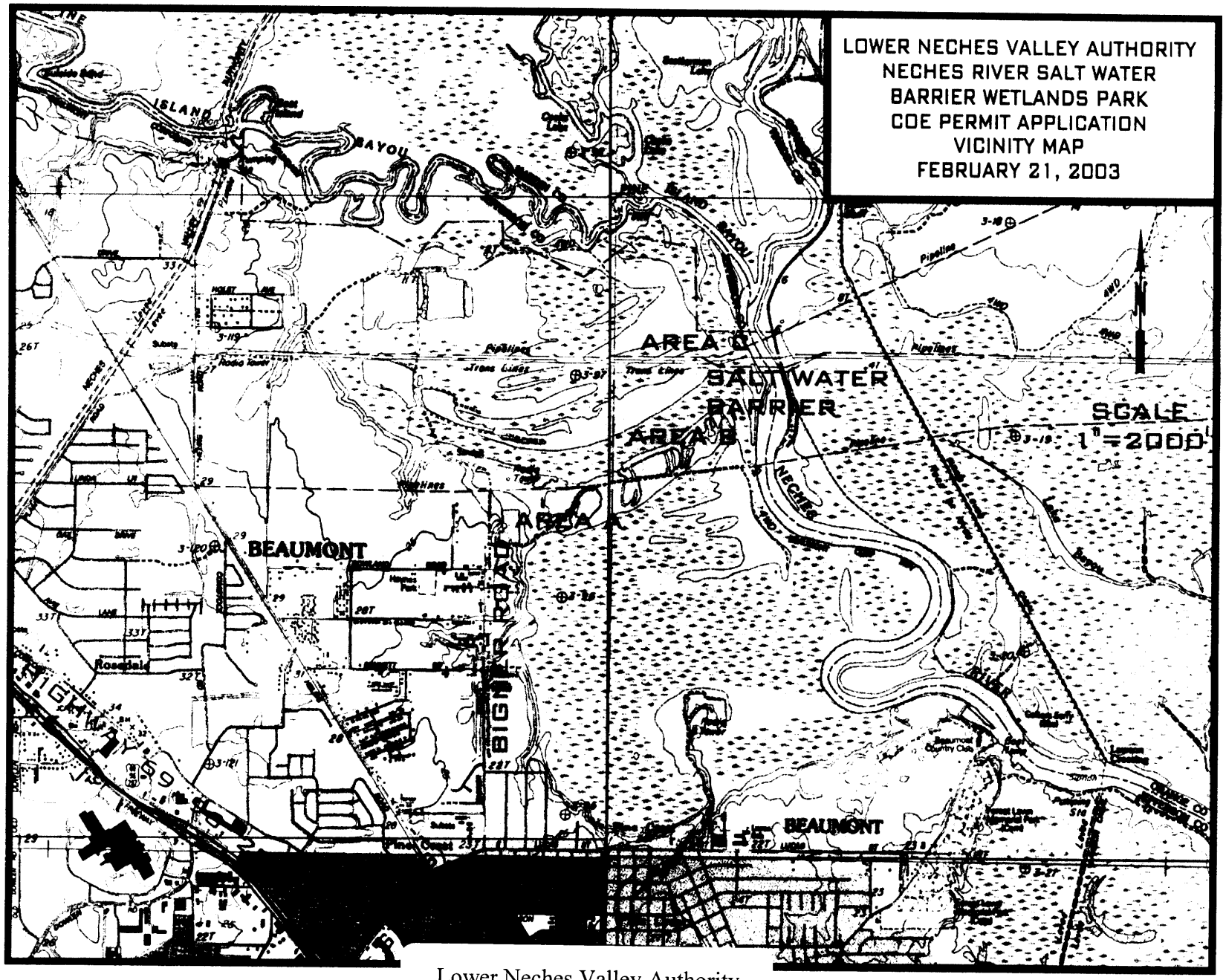

Lower Neches Valley Authority
22998
Sheet 1 of 10

FEB 27 2003

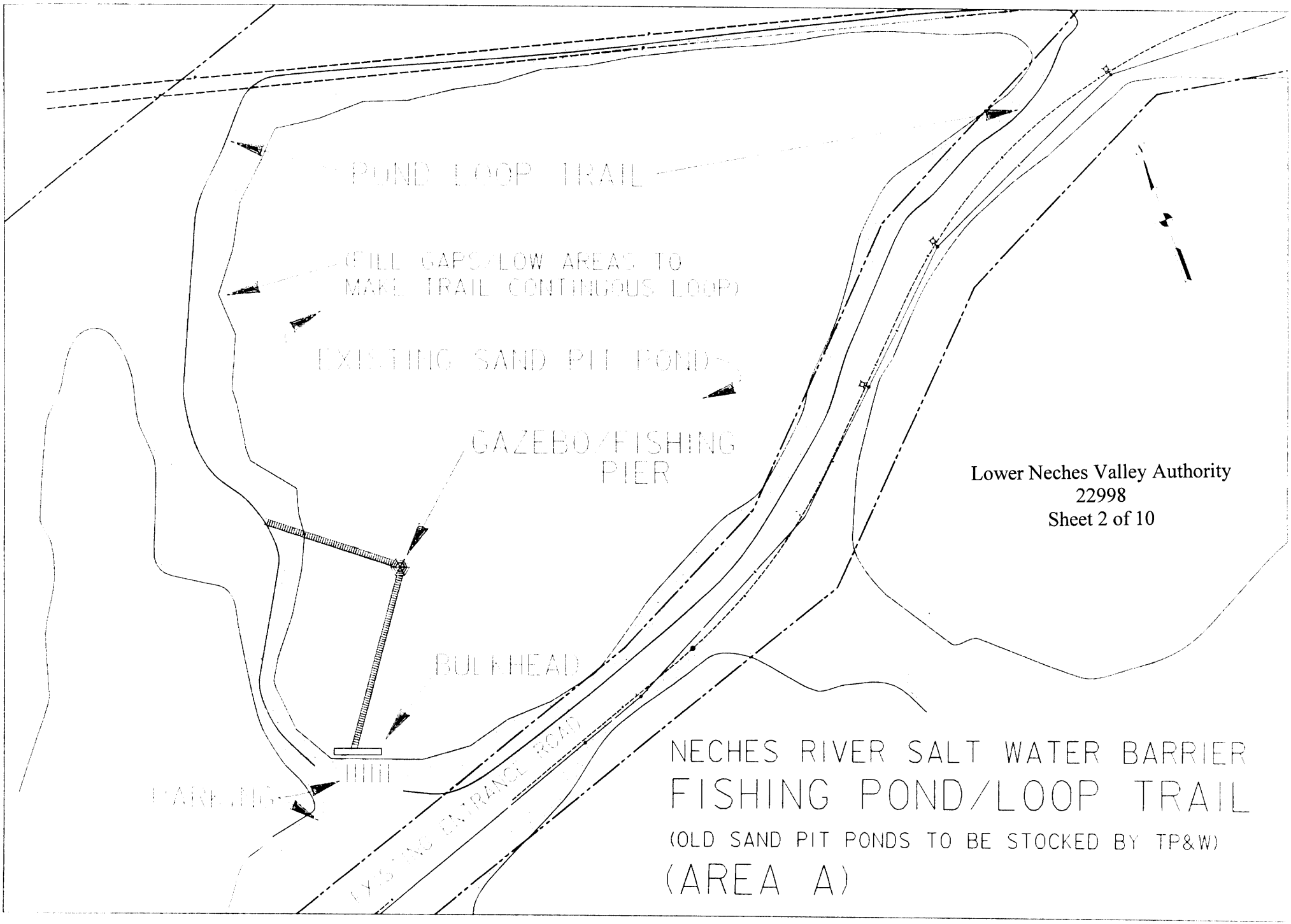

Lower Neches Valley Authority
22998
Sheet 2 of 10

FEB 27 2003

MAR 7 2003

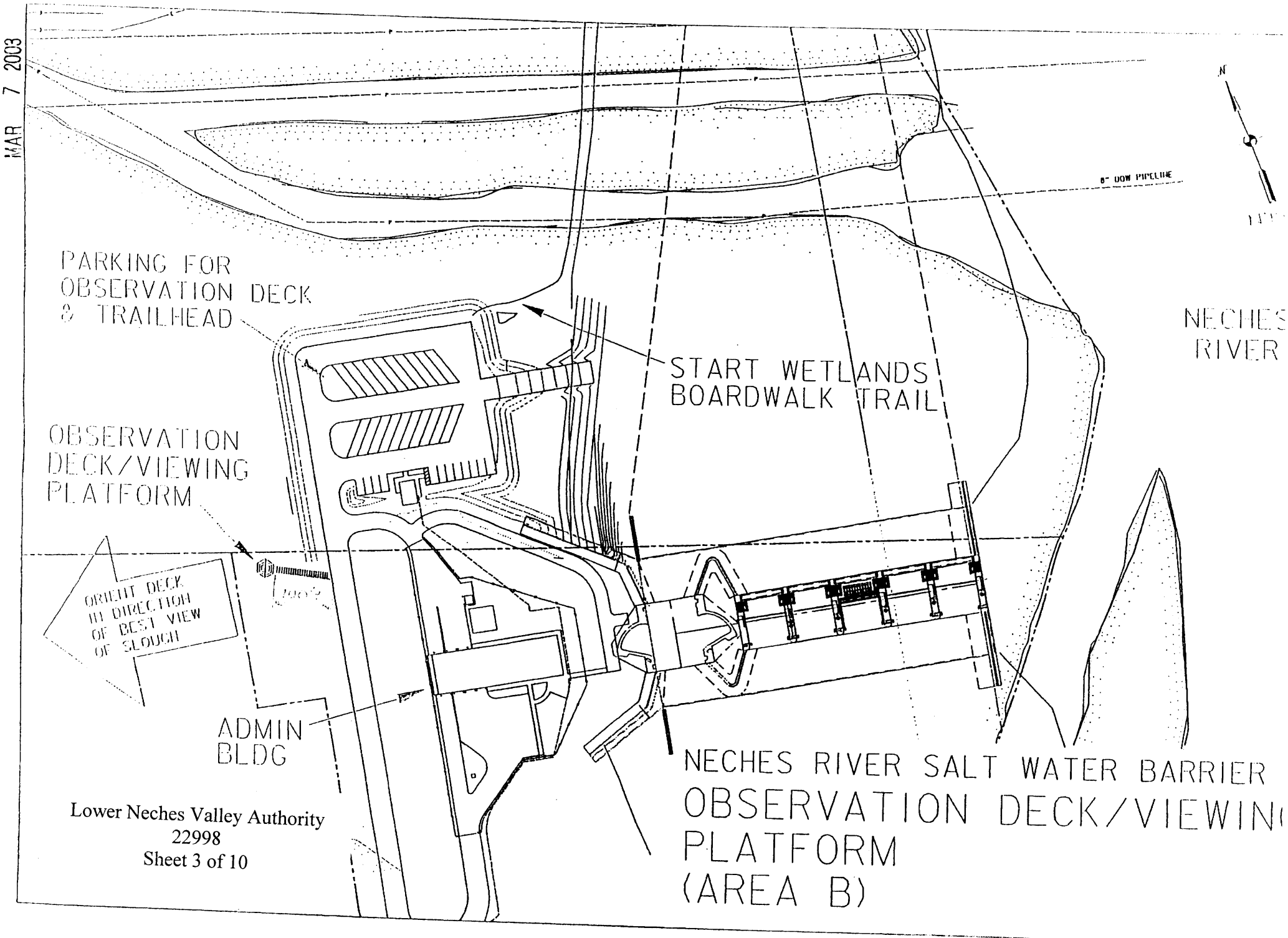

Lower Neches Valley Authority
22998
Sheet 3 of 10

FEB 27 2003

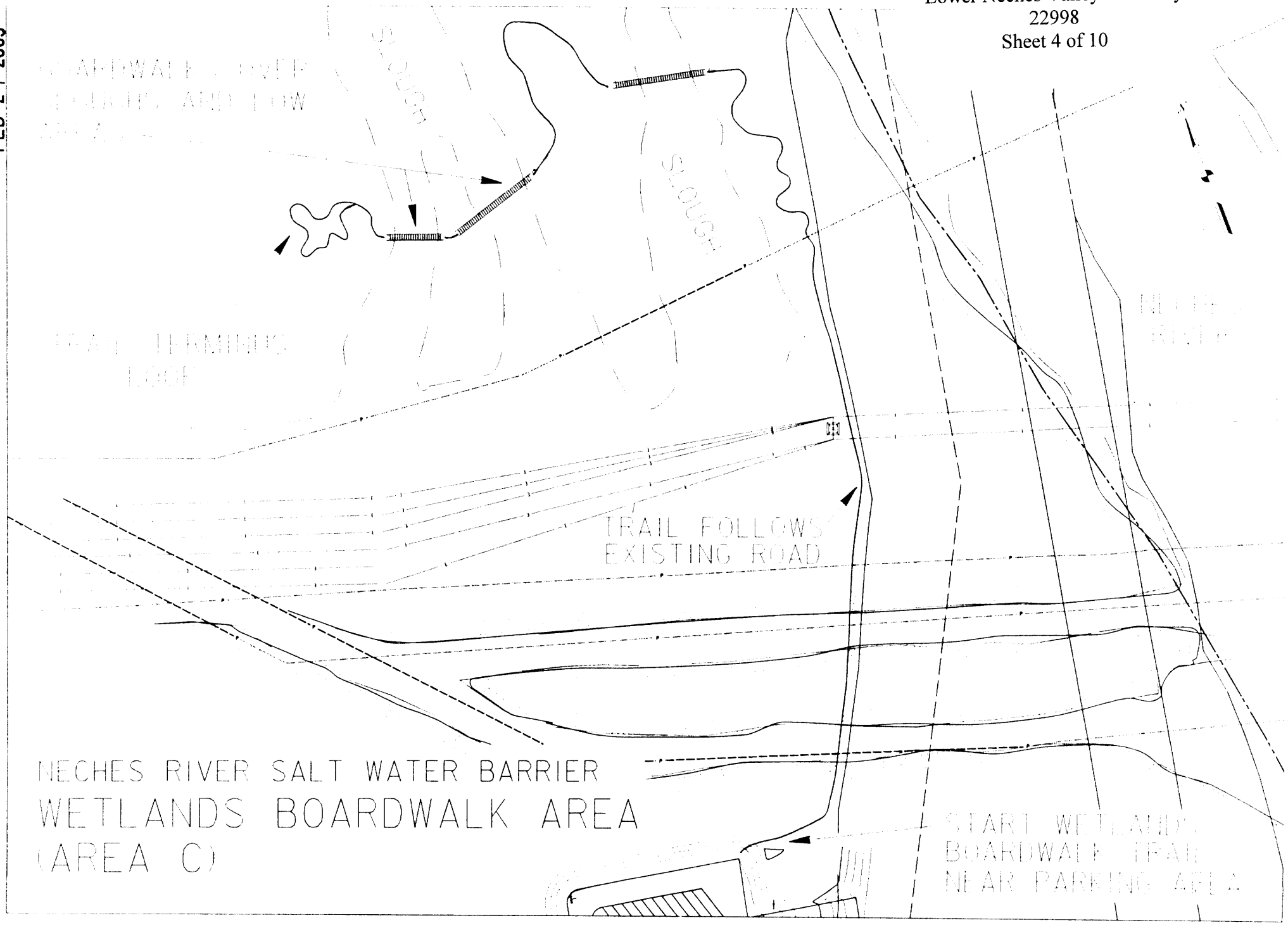
SLOUGH
SLOUGH
TRAIL FOLLOWS
EXISTING ROAD
NECHES RIVER SALT WATER BARRIER
WETLANDS BOARDWALK AREA
(AREA C)

MAR 7 2003

NOTES:

THE WATER ELEVATION SHOWN WAS OBTAINED BY THE CONTRACTOR DURING CONSTRUCTION OF THE ROAD AND DOES NOT INDICATE A NORMAL FLOW LEVEL.

THE GROUND LEVEL SHOWN ON THE WEST SIDE IS AN ESTIMATE AND IS TO BE USED FOR APPROXIMATIONS ONLY.

THE EROSION CONTROL USED IS TO BE GRASS PLANTED ON THE SIDE SLOPES. THE GRASS IS TO BE BERMUDA AND IS TO BE BROADCAST SEEDED AT A RATE OF 20 LBS. PER ACRE PLS.

THE LIMESTONE ON THE TOP OF THE ROAD IS TO BE INSTALLED ALONG WITH A MORE DEFINATIVE ROUTE FOR THE ROAD CURRENTLY IN SERVICE TO OBTAIN A ROAD AS SHOWN ON THE PERMIT APPLICATION.

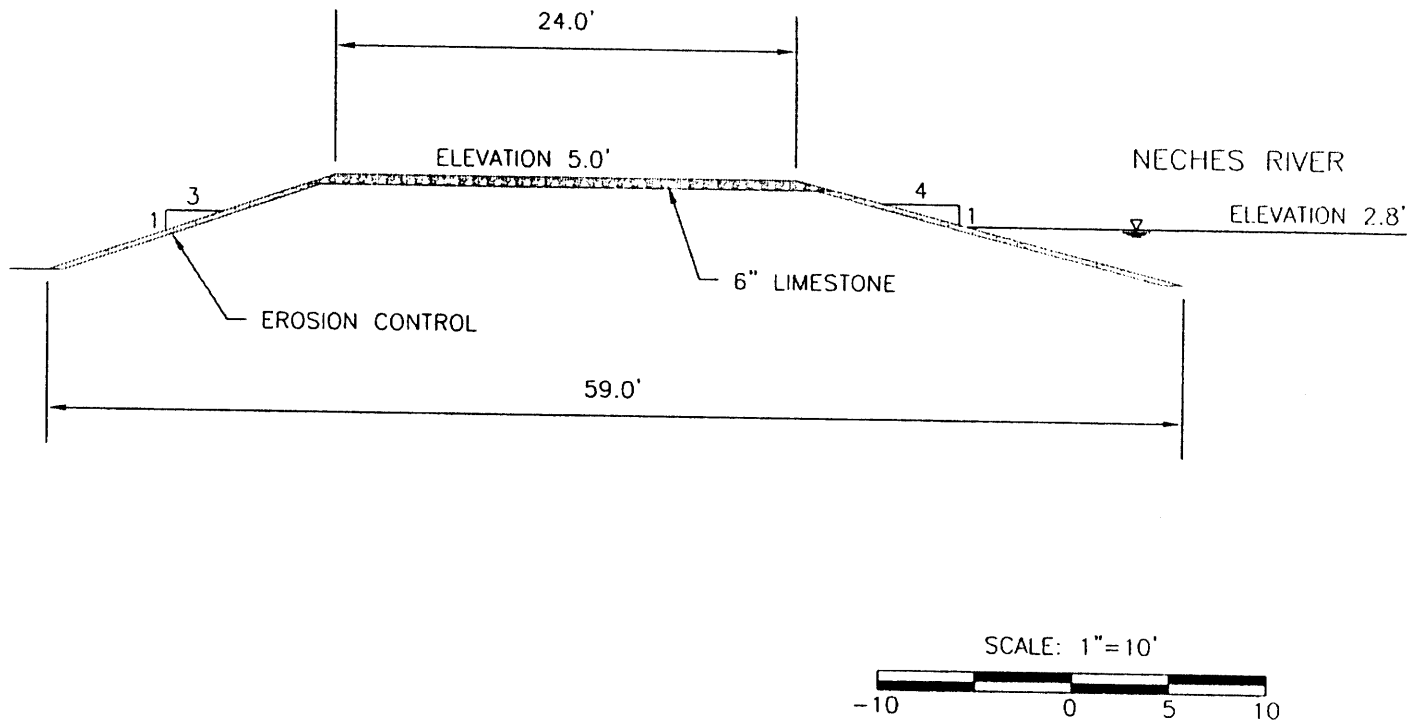

NECHES RIVER SALT WATER BARRIER WETLANDS PARK

LOWER NECHES VALLEY AUTHORITY

TYPICAL CROSS SECTION OF ROAD IN AREA C

Lower Neches Valley Authority
22998
Sheet 5 of 10

MAR 7 2003

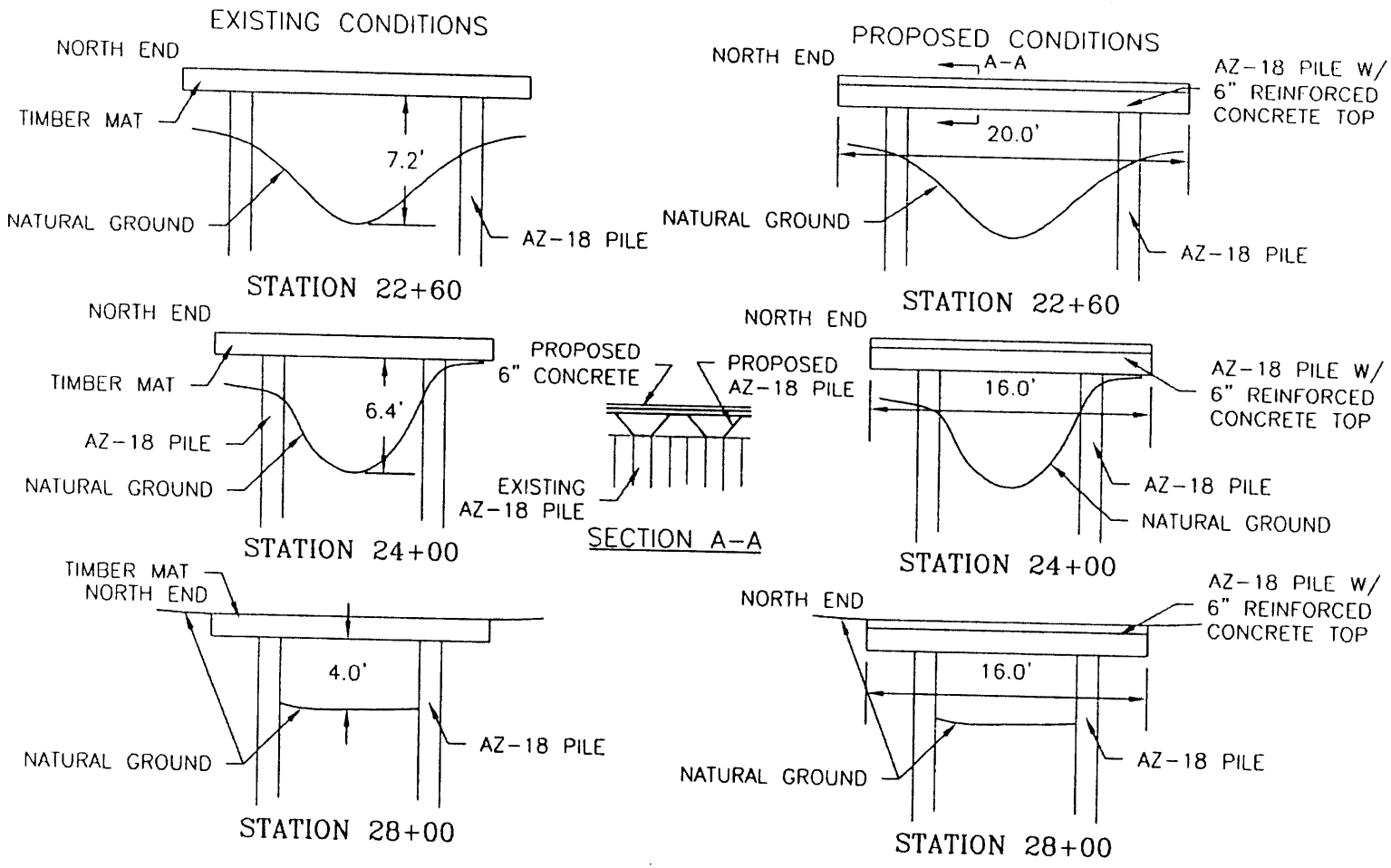

NOTE: ALL DIMENSIONS WERE OBTAINED FROM THE WEST SIDE OF THE BRIDGE.

SCALE: 1"=10'

-10 0 5 10

NECHES RIVER SALT WATER BARRIER WETLANDS PARK

LOWER NECHES VALLEY AUTHORITY

TYPICAL BRIDGE DETAILS FOR AREA C

Lower Neches Valley Authority
22998
Sheet 6 of 10

MAR 7 2003

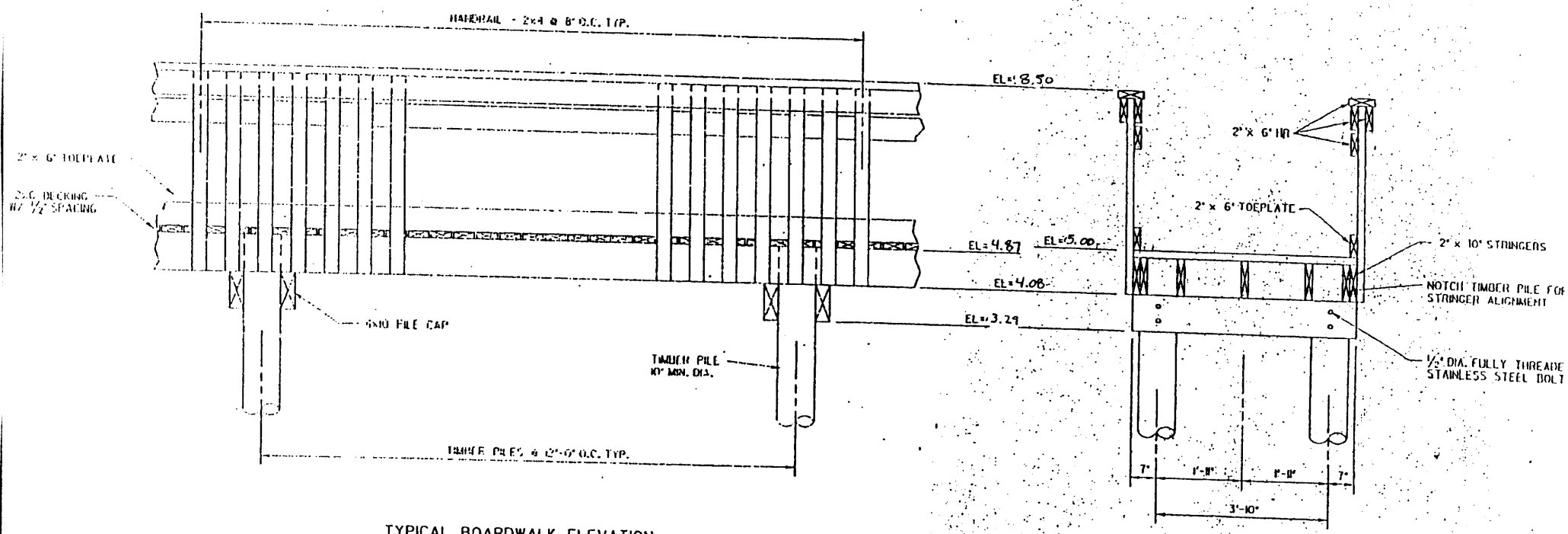

TYPICAL BOARDWALK ELEVATION
N.T.S.

TYPICAL BOARDWALK SECTION
N.T.S.

NECHES RIVER SALT WATER BARRIER WETLANDS PARK

LOWER NECHES VALLEY AUTHORITY

TYPICAL BOARDWALK DETAILS FOR ALL AREAS (A, B & C)

NECHES RIVER SALT WATER BARRIER WETLANDS PARK

LOWER NECHES VALLEY AUTHORITY

TYPICAL BOARDWALK DETAILS FOR ALL AREAS (A, B & C)

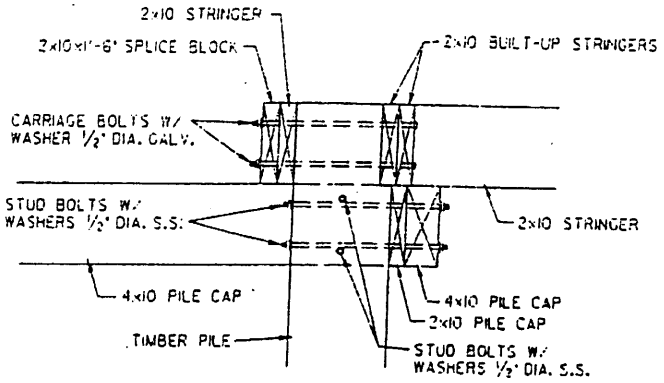

A 35/S5 TYP. SECTION
N.T.S.

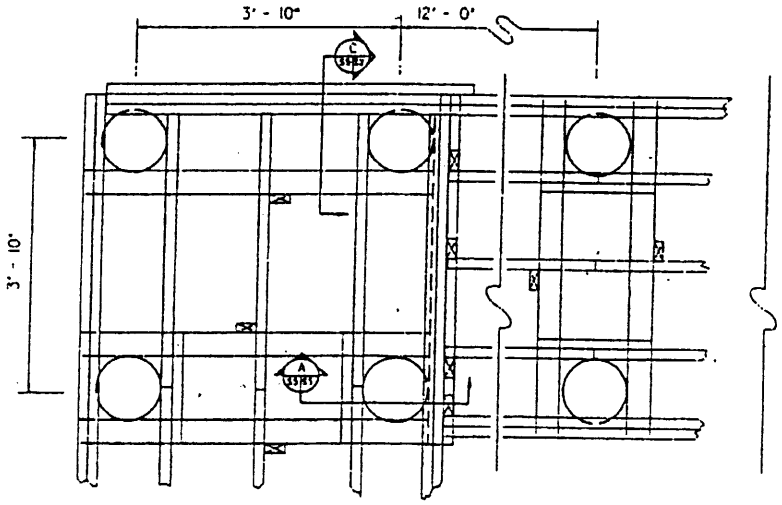

BOARDWALK CORNER
N.T.S.

NOTES:

1. TIMBER PILE SHALL BE A MINIMUM OF 10 INCHES IN DIAMETER.
2. BUILT-UP OUTSIDE STRINGERS SHALL BE NAILED W/ 10d NAILS - STAGGERED.
3. HANDRAIL SHALL BE NAILED W/ 16d NAILS UNLESS OTHERWISE SHOWN.
4. DECKING SHALL HAVE 1/2" SPACING AND SHALL BE NAILED W/ 2 - 16d NAILS PER SUPPORT.
5. ALL NAILS SHALL BE RING OR SCREW SHANK HOT DIP GALVANIZED.
6. HANDRAIL AND DECKING NOT SHOWN FOR CLARITY.

MAR 7 2003

NECHES RIVER SALT WATER BARRIER WETLANDS PARK

LOWER NECHES VALLEY AUTHORITY

TYPICAL BOARDWALK DETAILS FOR ALL AREAS (A, B & C)

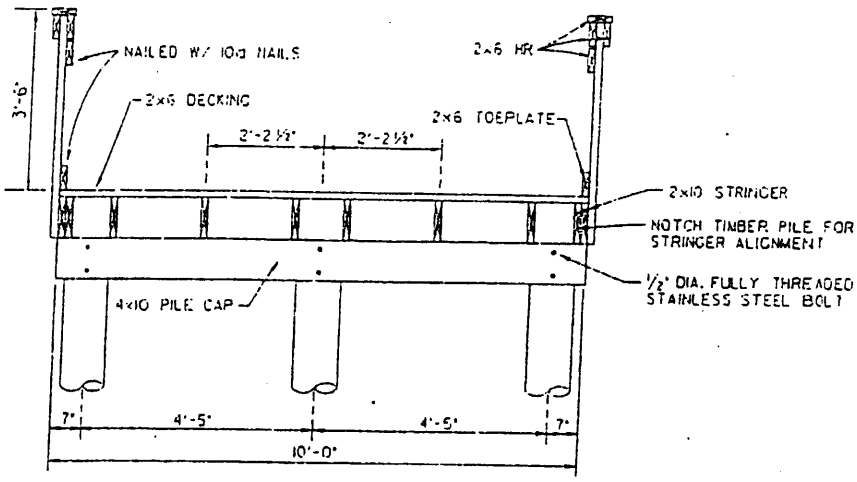

A 52/52 TYP. SECTION
N.T.S.

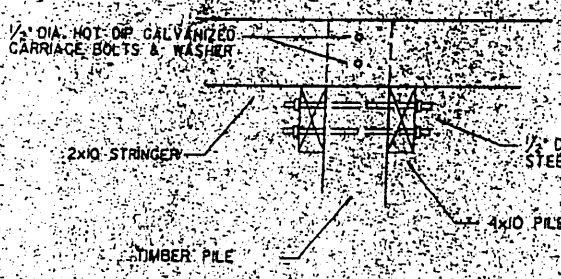

B 52/52 TYP. SECTION
N.T.S.

NOTES:

1. TIMBER PILE SHALL BE A MINIMUM OF 10 INCHES IN DIAMETER.
2. BUILT-UP OUTSIDE STRINGERS SHALL BE NAILED W/ 10d NAILS - STAGGERED.
3. STRINGERS NAILED TO TIMBER PILES SHALL BE NAILED W/ 20d NAILS.
4. HANDRAIL SHALL BE NAILED W/ 16d NAILS UNLESS OTHERWISE SHOWN.
5. DECKING SHALL BE NAILED W/ 2 - 16d NAILS PER SUPPORT.
6. ALL NAILS SHALL BE RING OR SCREW SHANK HOT DIP GALVANIZED.
7. EXISTING PINE TREES ON BOTH SIDES OF DECK AND STUMP AT END OF DECK SHALL NOT BE DAMAGED OR DISTURBED.

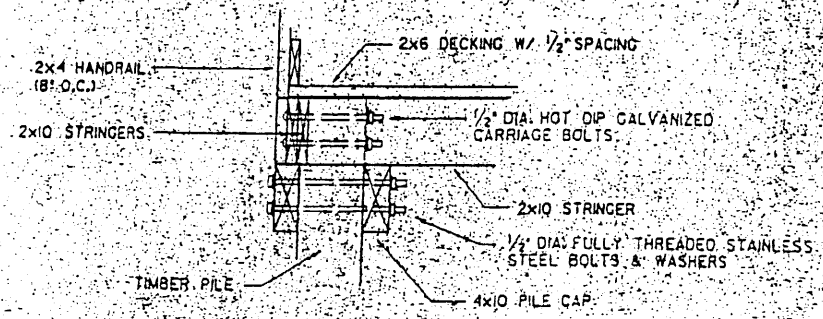

C 52/52 TYP. SECTION
N.T.S.

Lower Neches Valley Authority
22998
Sheet 9 of 10

NECHES RIVER SALT WATER BARRIER CONCEPTUAL RECREATION PLAN

AREA A

Existing pond to be circled by natural/gravel surface trail w/ picnic tables scattered throughout area. A bulkhead is proposed for southern location of pond where fishing pier is to start. Gazebo is proposed at axis of two piers. Location and length of piers to be determined by owner. Six-foot min. width is recommended for piers. Parking is proposed near bulkhead.

AREA B

Proposed observation deck/viewing platform to be accessed by pedestrians from existing road. Location of observation deck & length of boardwalk access to be determined in the field by owner to obtain best view of existing slough.

AREA C

Proposed wetlands boardwalk trail to be natural/gravel surface. Trail to be marked in the field by owner, based on best alignment relating to existing elevations and habitat views. Boardwalks shall be located where necessary to cross sloughs or lower elevations. Four-foot min. width is recommended for boardwalks on wetlands trail.

Lower Neches Valley Authority
22998
Sheet 10 of 10

FEB 2 7 2003