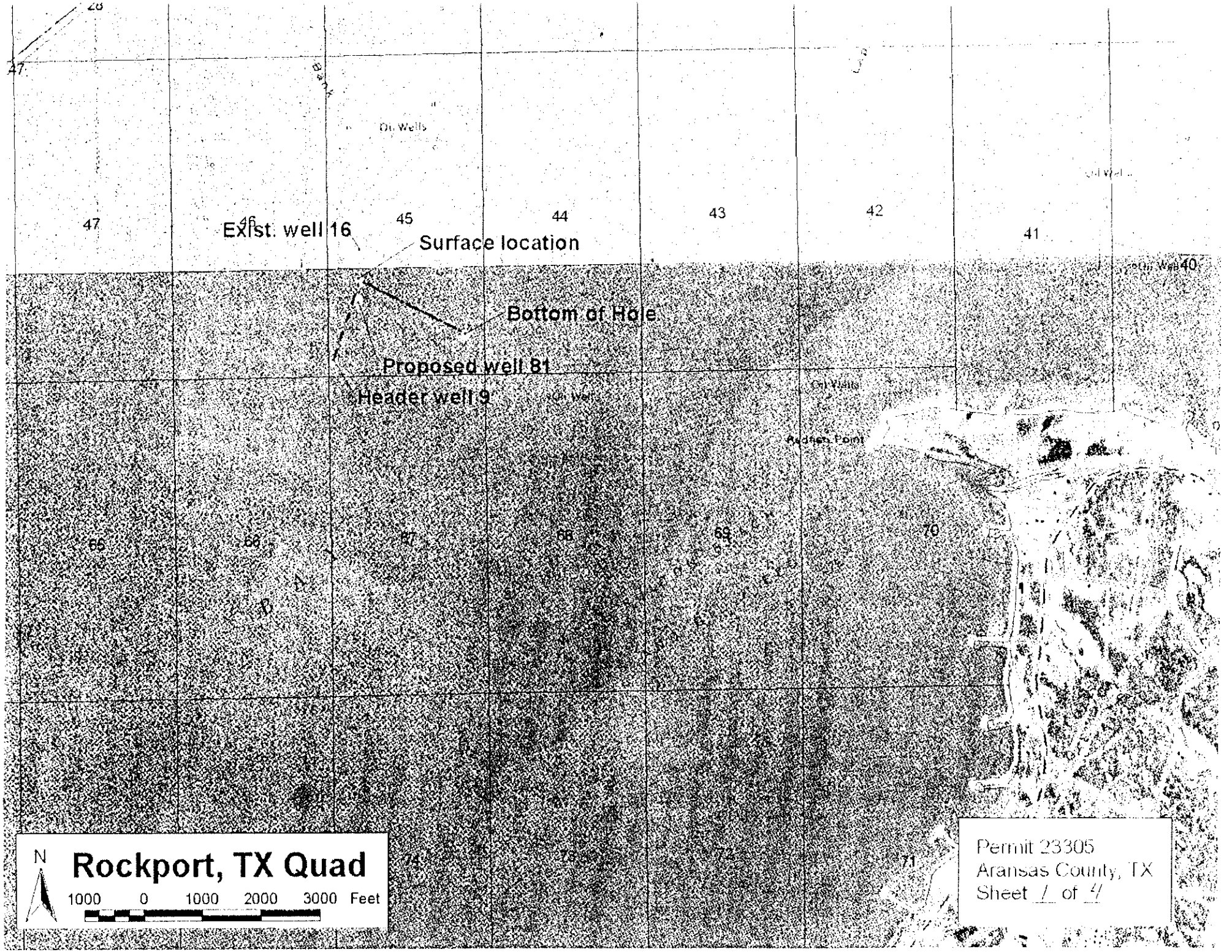
Exist. well 16
Surface location
Bottom of Hole
Proposed well 81
Header well 9
Oil Wells
Rockport, TX Quad
N
1000 0 1000 2000 3000 Feet
Permit 23305
Aransas County, TX
Sheet 1 of 4

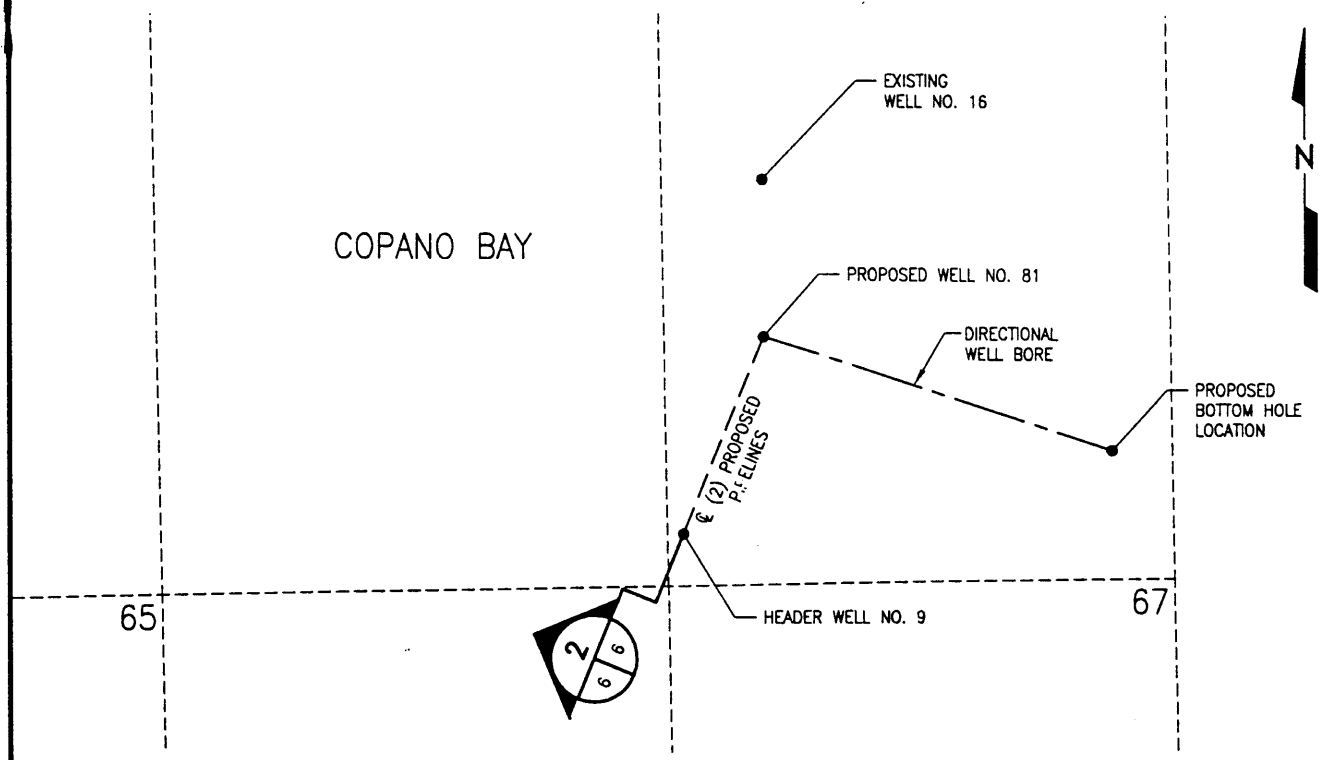

1 | 6 **PLAN**

SCALE: N.T.S.

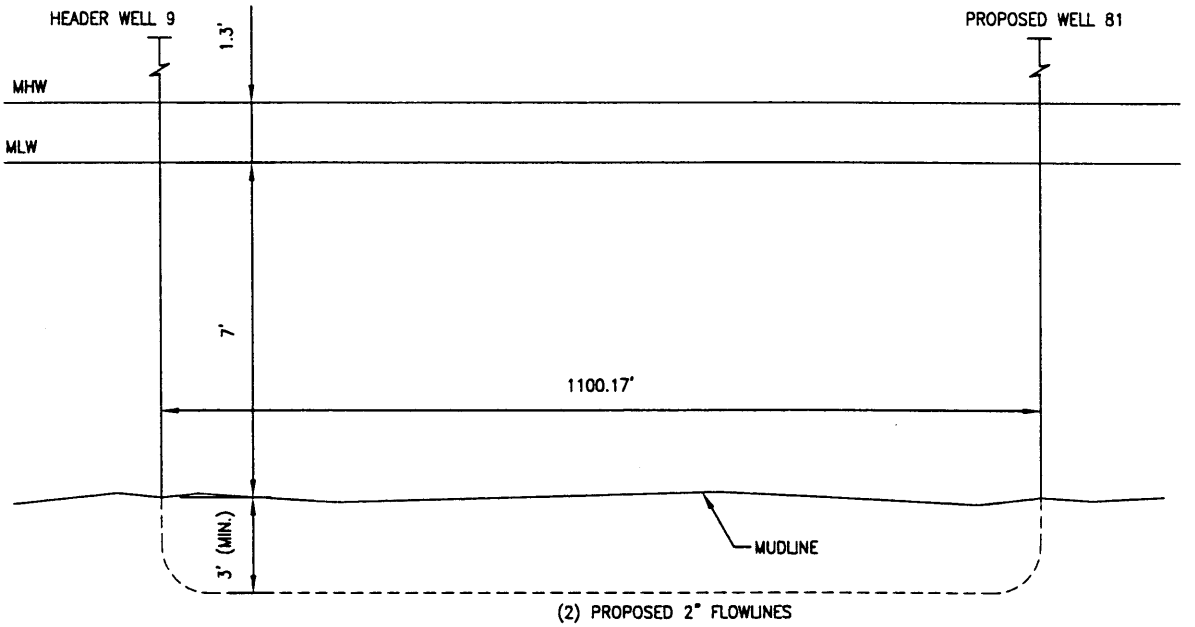

2 | 6 **PROFILE**

SCALE: N.T.S.

PERMIT 23305
Sheet 2 of 4

ACTIVITY: INSTALLATION OF TWO – 2 INCH NATURAL GAS PIPELINES AND ASSOCIATED DIRECTIONAL WELL – COPANO BAY STATE TRACT #45

APPLICANT: LIVE OAK RESERVES

SHINER MOSELEY AND ASSOCIATES, INC.
ENGINEERS & CONSULTANTS
555 North Carancahua Street, Suite 1650 Corpus Christi, Texas 78478

DATE: 12-2-2003	COUNTY: ARANSAS	DATUM: NGVD'29	SMA Job No: 200.30226

J:\SMACAD\Projects\2003\30226\dwg\00\PERMITS\30226p6.dwg 12/03/2003 01:25:54 PM CST

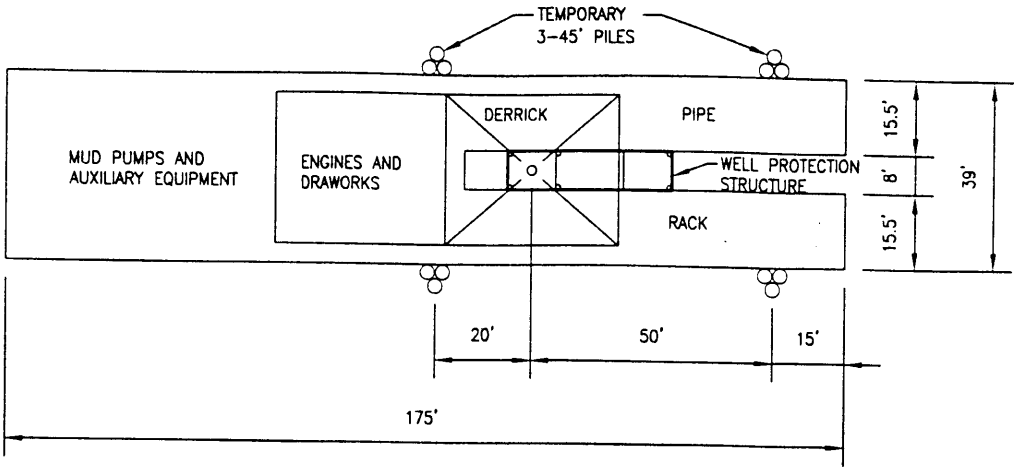

PLAN

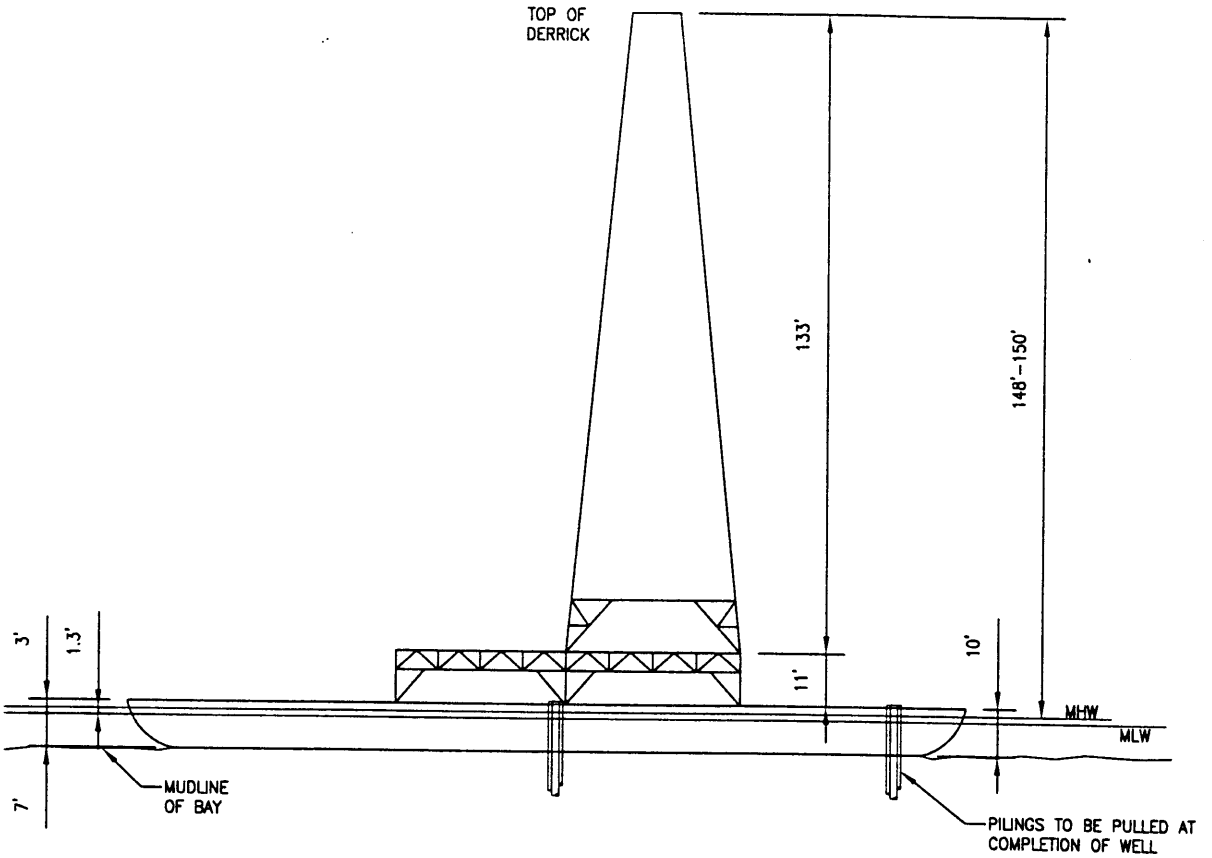

ELEVATION

Permit 23305
Sheet 3 of 4

1 / 4 **DRILLING BARGE**

SCALE: N.T.S.

ACTIVITY: INSTALLATION OF TWO – 2 INCH NATURAL GAS PIPELINES AND ASSOCIATED DIRECTIONAL WELL – COPANO BAY STATE TRACT #45

APPLICANT: LIVE OAK RESERVES

SHINER MOSELEY AND ASSOCIATES, INC.
ENGINEERS & CONSULTANTS
555 North Carancahua Street, Suite 1650 Corpus Christi, Texas 78478

DATE: 12-2-2003	COUNTY: ARANSAS	DATUM: NGVD'29	SMA Job No: 200.30226

J:\SMACAD\Projects\2003\30226\dwg\00\PERMITS\30226p4.dwg 12/03/2003 01:16:05 PM CST

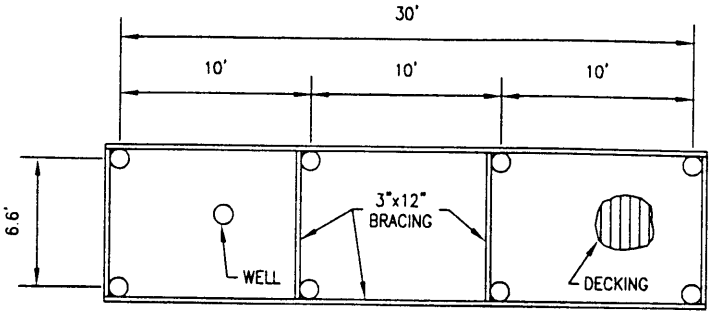

PLAN

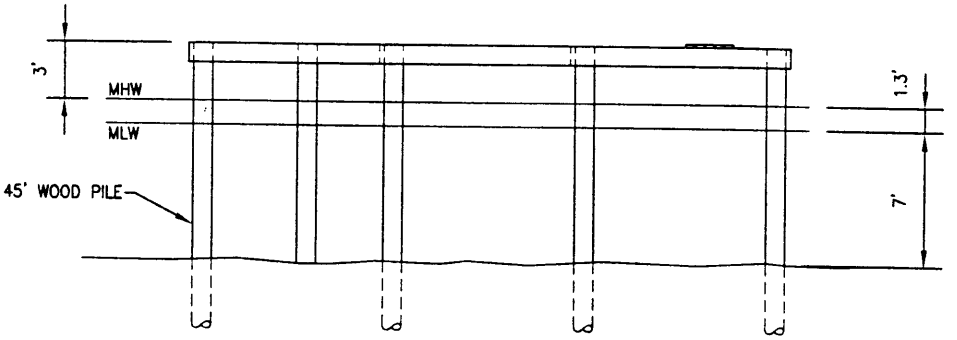

ELEVATION

1 / 5 **PERMANENT WELL PROTECTION STRUCTURE (TYPICAL)**

SCALE: N.T.S.

Permit 23305
Sheet 4 of 4

ACTIVITY: INSTALLATION OF TWO – 2 INCH NATURAL GAS PIPELINES AND ASSOCIATED DIRECTIONAL WELL – COPANO BAY STATE TRACT #45

APPLICANT: LIVE OAK RESERVES

SHINER MOSELEY AND ASSOCIATES, INC.
ENGINEERS & CONSULTANTS
555 North Carancahua Street, Suite 1650 Corpus Christi, Texas 78478

DATE: 12-2-2003	COUNTY: ARANSAS	DATUM: NGVD'29	SMA Job No: 200.30226

J:\SMACAD\Projects\2003\30226\dwg\00\PERMITS\30226p5.dwg 12/03/2003 01:18:05 PM CST