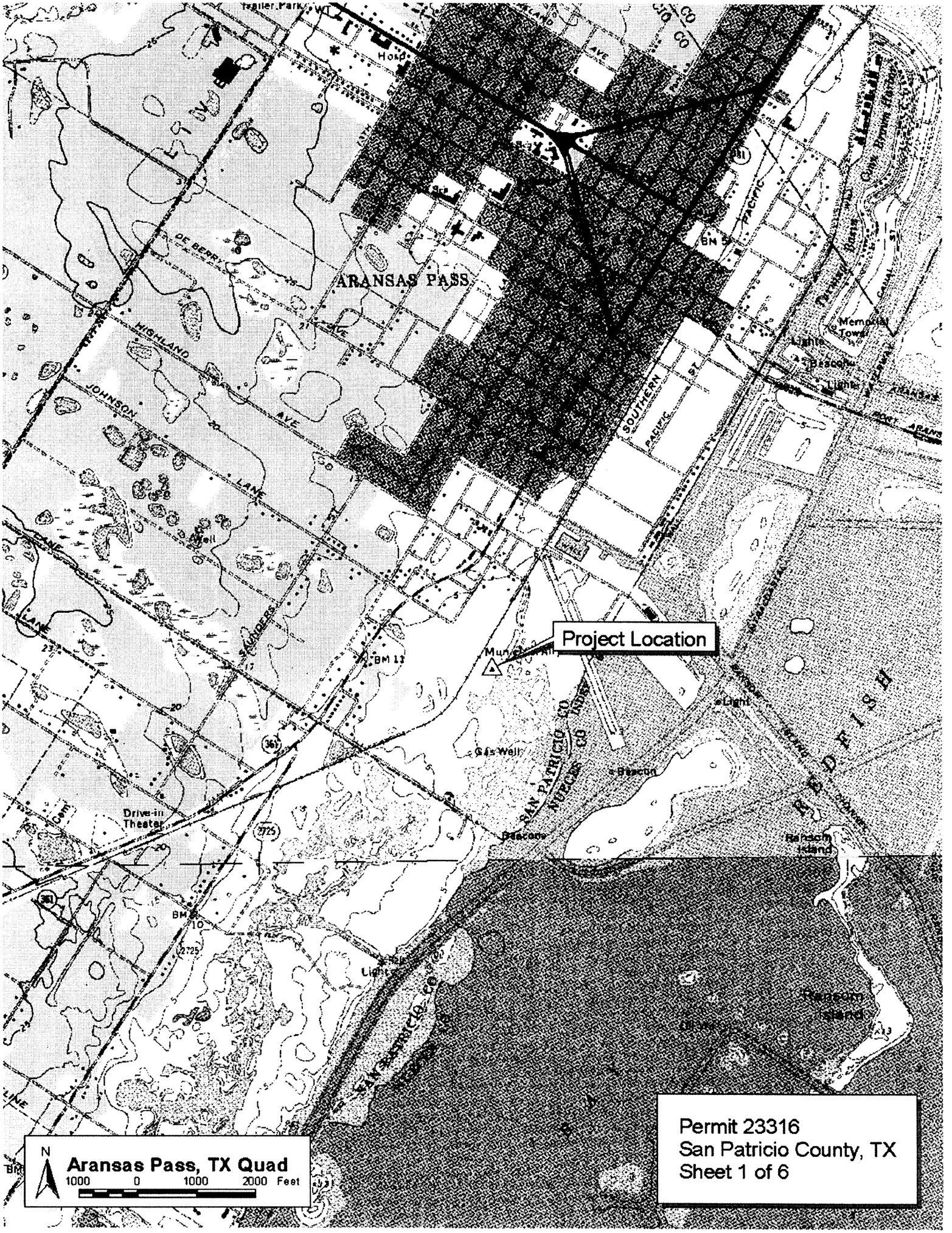
ARANSAS PASS
Project Location
Aransas Pass, TX Quad
1000 0 1000 2000 Feet
N
Permit 23316
San Patricio County, TX
Sheet 1 of 6

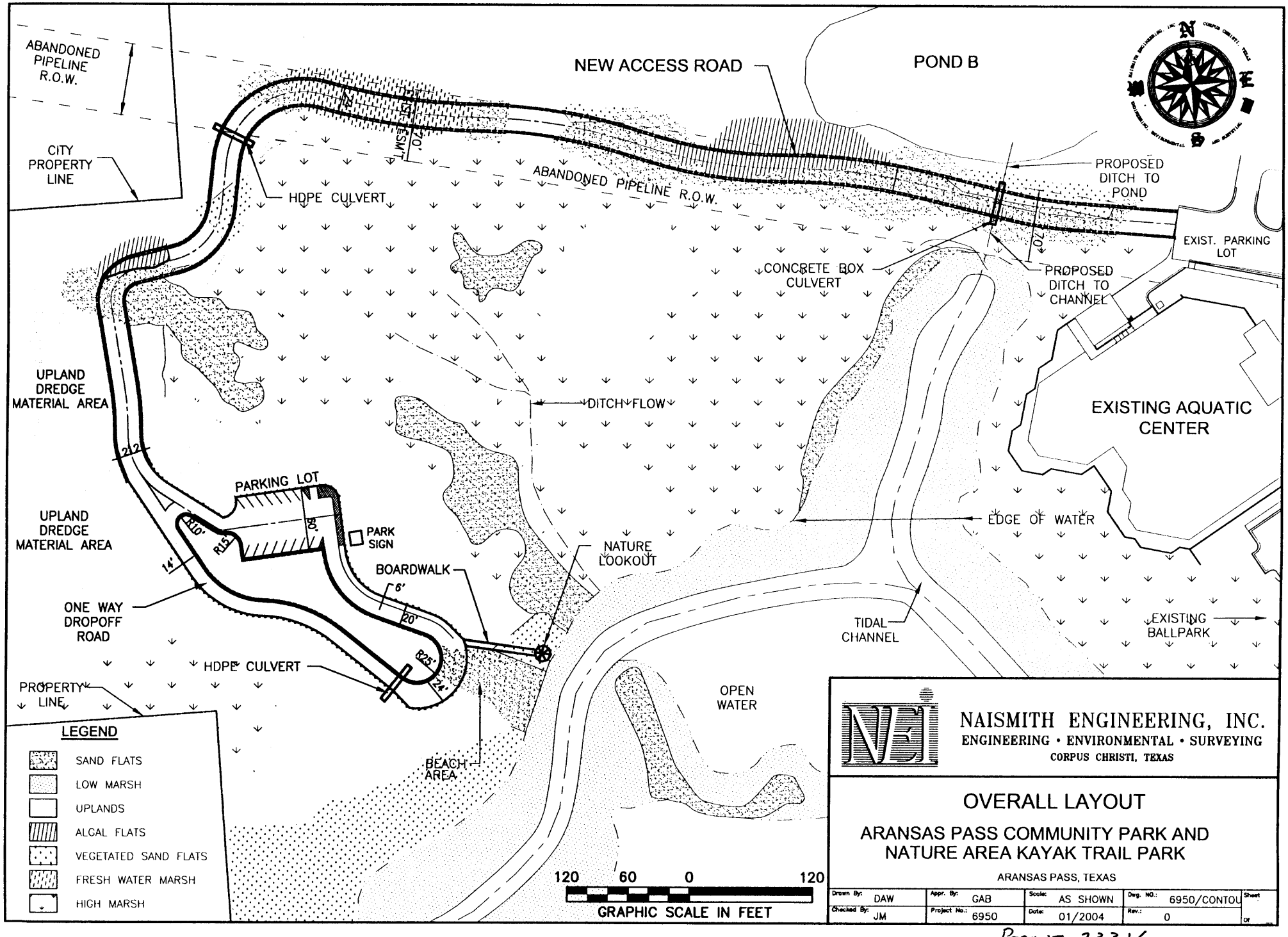

PERMIT 23316
Sheet 2 of 6

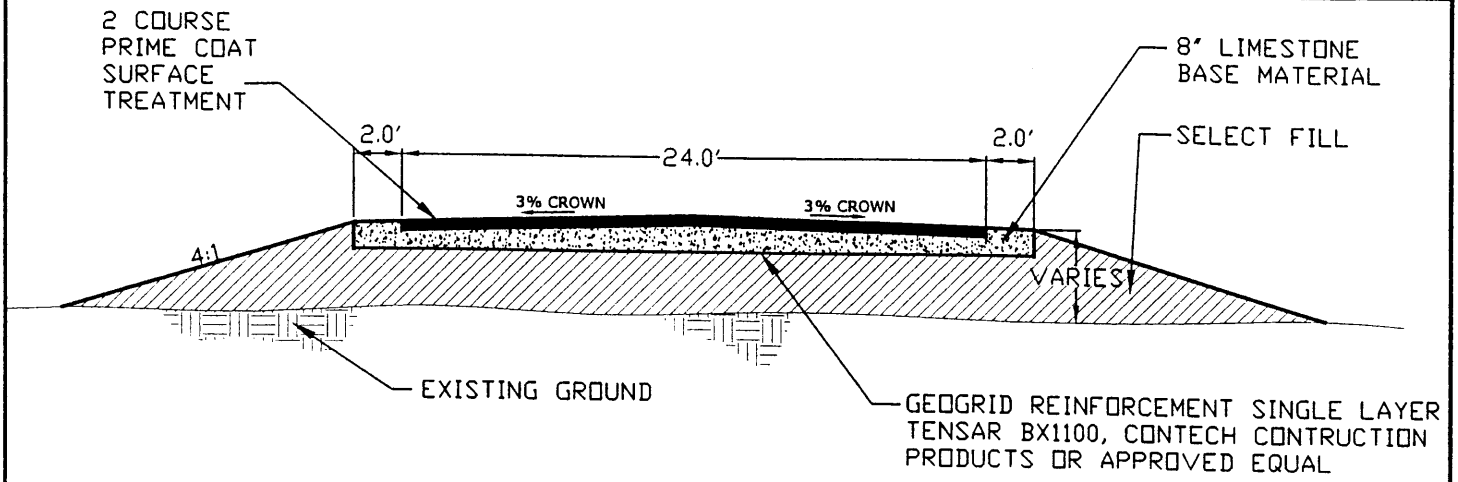

TYPICAL ACCESS ROAD CROSS-SECTION

N.T.S.

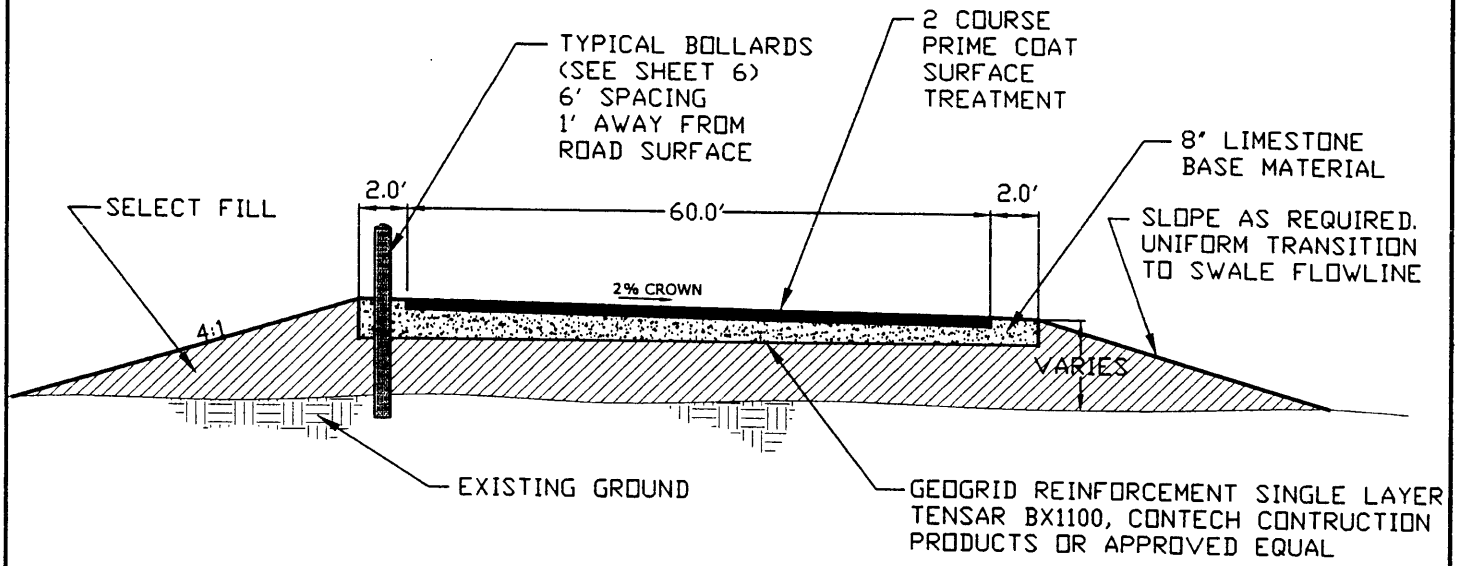

PARKING LOT CROSS-SECTION

N.T.S.

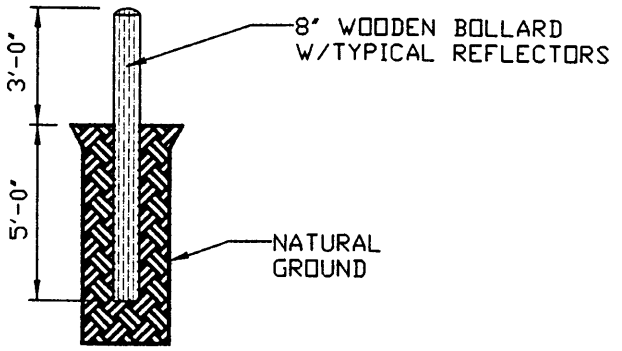

NOTE: WOOD SHALL BE CCA TREATED LUMBER. BOLLARDS SHALL BE PLACED BY MEANS OF JETTING OR AUGER DRILL. COMPACT SOIL AROUND BOLLARD AFTER PLACEMENT.

BOLLARD

N.T.S.

PERMIT 23316
Sheet 3 of 6

NAISMITH ENGINEERING, INC.
ENGINEERING • ENVIRONMENTAL • SURVEYING
CORPUS CHRISTI, TEXAS

ACCESS ROAD SECTION AND BOLLARD DETAIL
ARANSAS PASS COMMUNITY PARK AND NATURE
AREA KAYAK TRAIL FACILITIES
ARANSAS PASS, TEXAS

Drawn By: BR	Appr. By:	Scale: AS SHOWN	Dwg. No.: PERMIT-BOLLARD
Checked By:	Project No.: 6950	Date: 12/2003	Rev.: 0

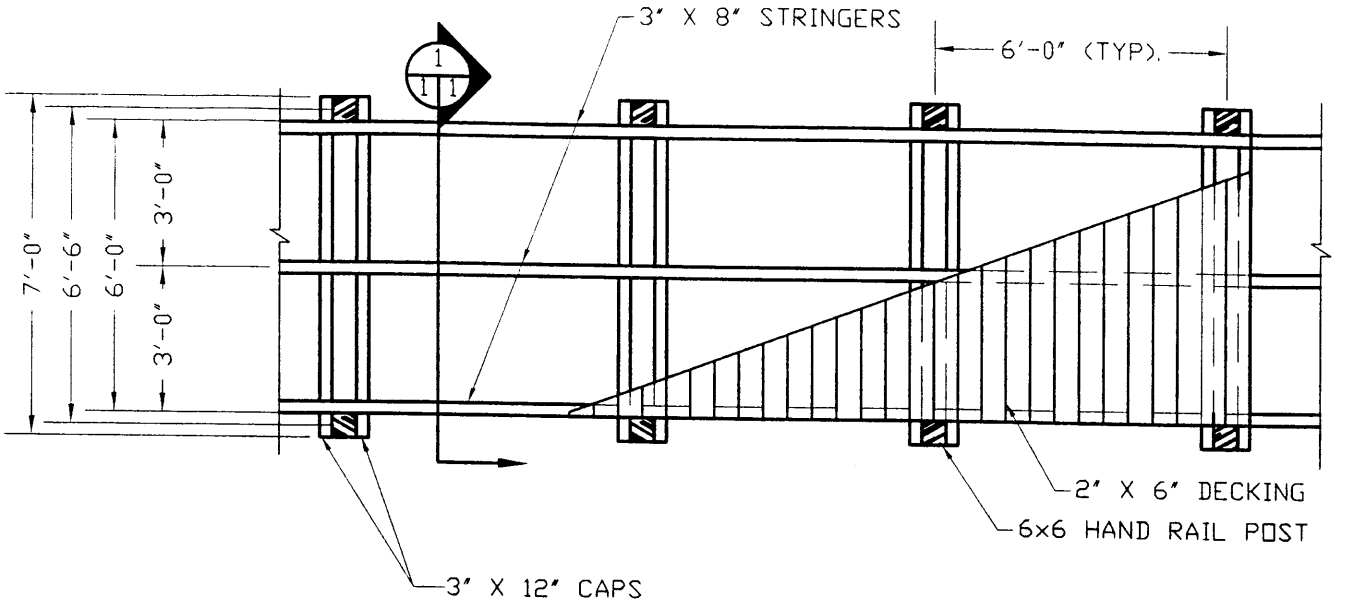

BOARDWALK PLAN DETAIL

N.T.S

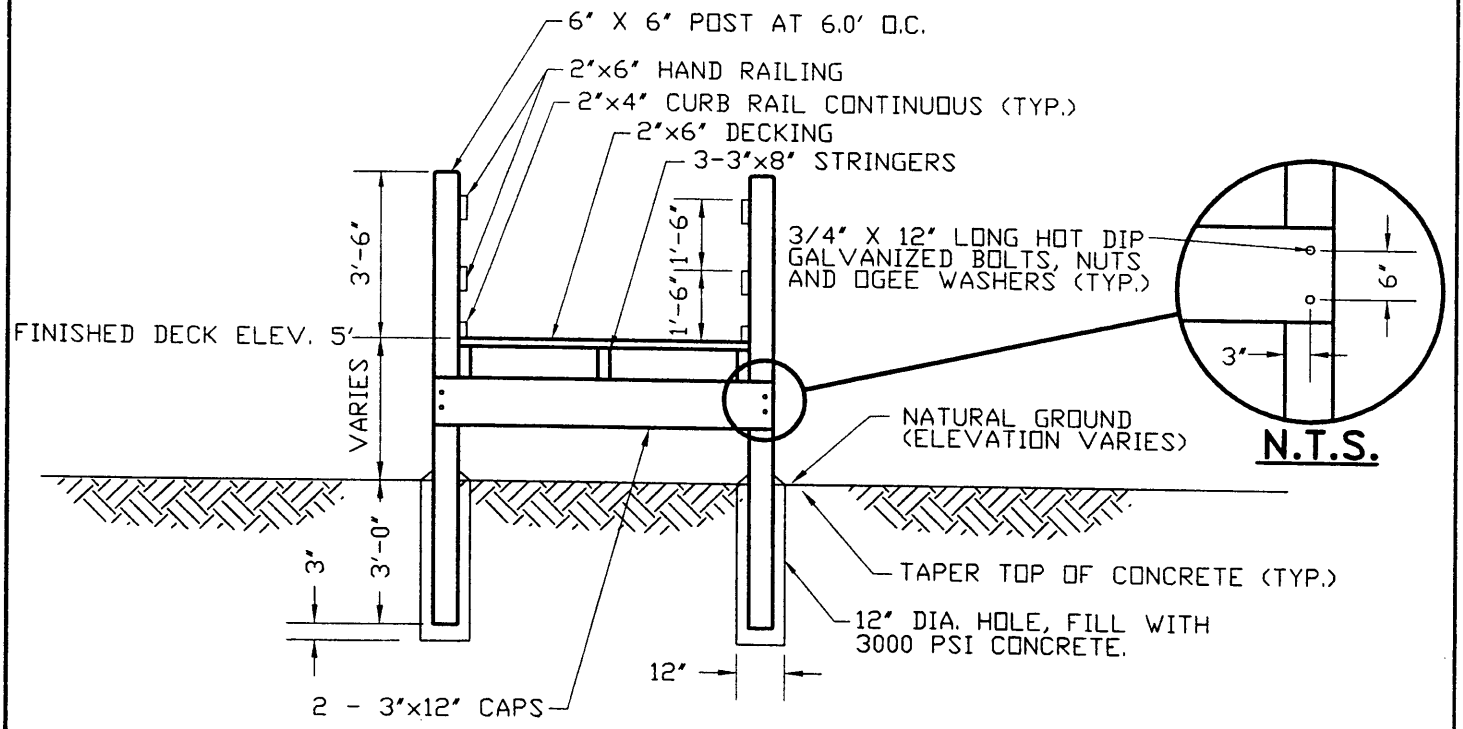

1 | 1 1

BOARDWALK SECTION

N.T.S

PERMIT 23316
Sheet 4 of 6

NAISMITH ENGINEERING, INC.
ENGINEERING • ENVIRONMENTAL • SURVEYING
CORPUS CHRISTI, TEXAS

BOARDWALK DETAIL AND SECTION
ARANSAS PASS COMMUNITY PARK AND NATURE AREA KAYAK TRAIL FACILITIES
ARANSAS PASS, TEXAS

Drawn By: BR	Appr. By:	Scale: AS SHOWN	Dwg. No.: PERMIT-BOARDWALK
Checked By:	Project No.: 6950	Date: 12/2003	Rev.: 0

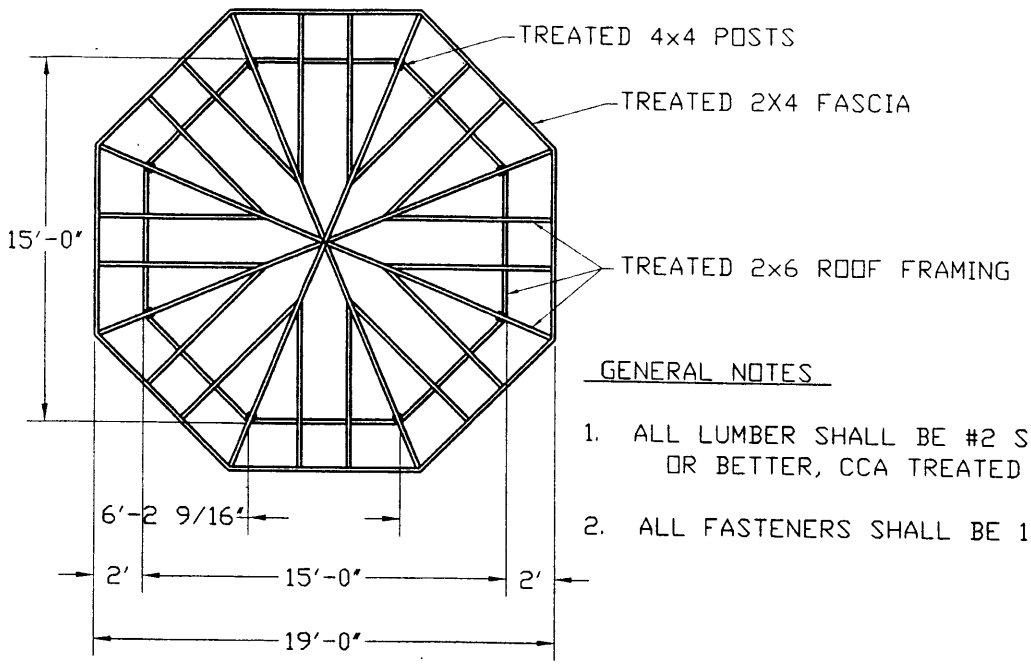

GENERAL NOTES

1. ALL LUMBER SHALL BE #2 SOUTHERN YELLOW PINE, OR BETTER, CCA TREATED TO 0.6 LBS.
2. ALL FASTENERS SHALL BE 16d GALV. RING SHANK NAILS.

LOOKOUT ROOF FRAMING

N.T.S

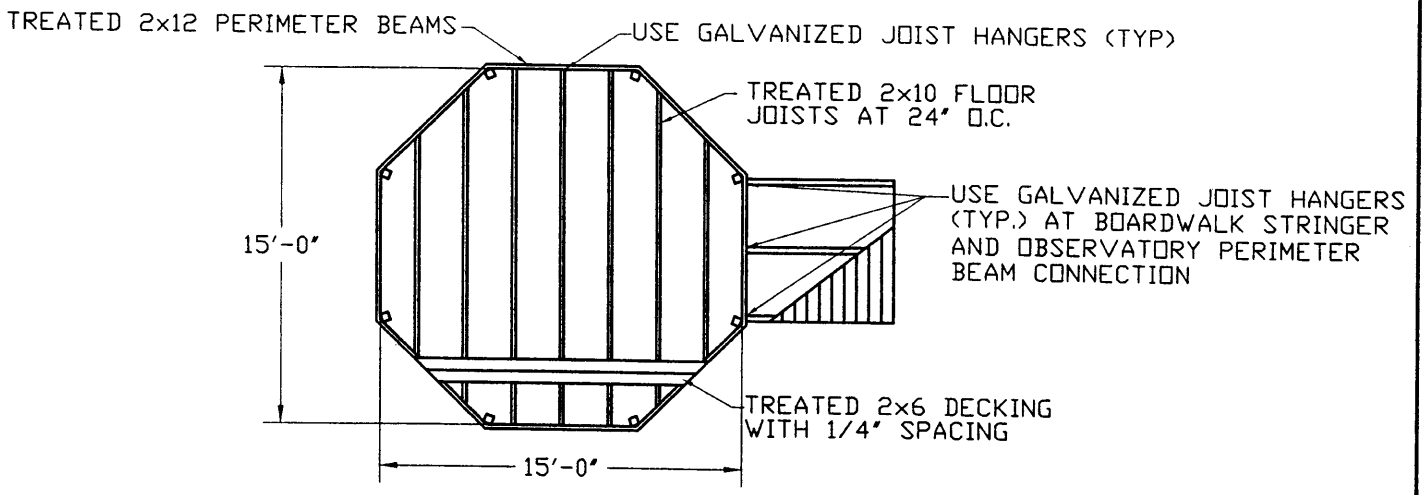

LOOKOUT FLOOR FRAMING

N.T.S

PERMIT 23316
Sheet 5 of 6

NAISMITH ENGINEERING, INC.
ENGINEERING • ENVIRONMENTAL • SURVEYING
CORPUS CHRISTI, TEXAS

LOOKOUT ROOF AND FLOOR FRAMING PLAN
ARANSAS PASS COMMUNITY PARK AND NATURE AREA KAYAK TRAIL FACILITIES
ARANSAS PASS, TEXAS

Drawn By: BR	Appr. By:	Scale: AS SHOWN	Dwg. NO.: PERMIT-KIOSK
Checked By:	Project No.: 6950	Date: 12/2003	Rev.: 0

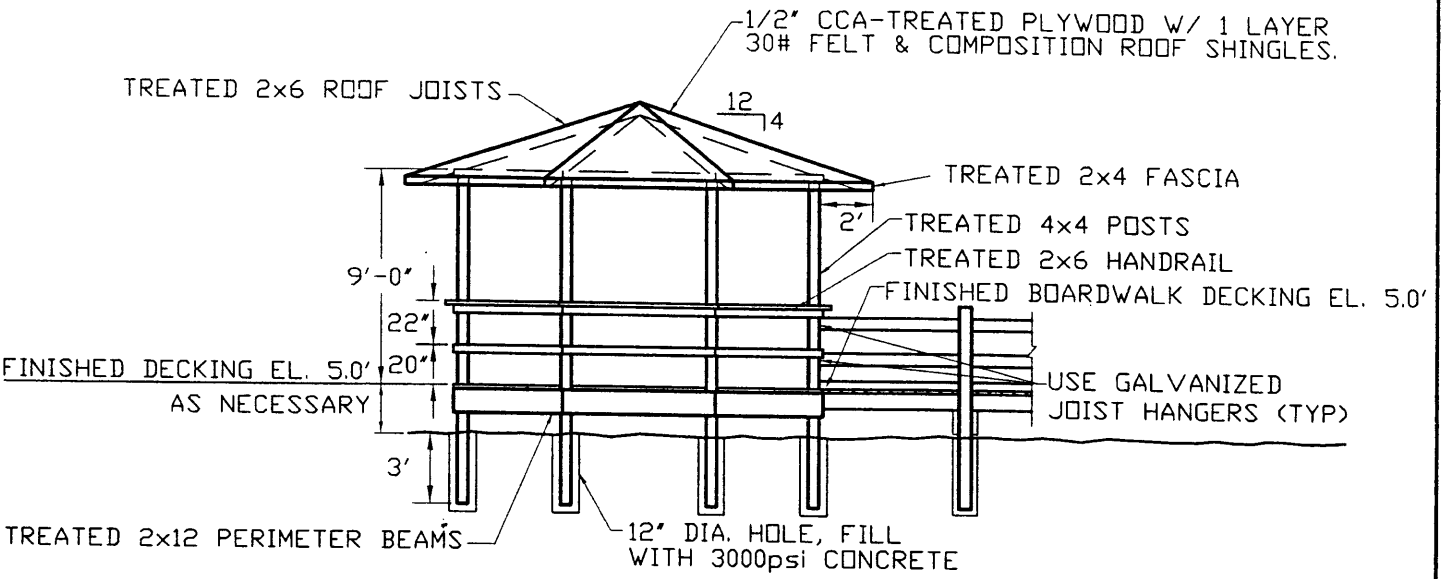

LOOKOUT ELEVATION

N.T.S.

PERMIT 23316
Sheet 6 of 6

NAISMITH ENGINEERING, INC.
ENGINEERING • ENVIRONMENTAL • SURVEYING
CORPUS CHRISTI, TEXAS

LOOKOUT ELEVATION
ARANSAS PASS COMMUNITY PARK AND NATURE
AREA KAYAK TRAIL FACILITIES
ARANSAS PASS, TEXAS

Drawn By: BR	Appr. By:	Scale: AS SHOWN	Dwg. NO.: PERMIT-KIOSKELEV
Checked By:	Project No.: 6950	Date: 12/2003	Rev.: 0