ENGINEERING APPENDIX A

APPENDIX 3

PLATES – RECOMMENDED PLAN

US Army Corps
of Engineers®

GULF INTRACOASTAL WATERWAY BRAZOS RIVER FLOODGATES AND COLORADO RIVER LOCKS SYSTEMS, FEASIBILITY STUDY ENGINEERING APPENDIX DRAWINGS

US Army Corps
of Engineers®
GALVESTON DISTRICT

MARK	DESCRIPTION	DATE	APPR.	MARK	DESCRIPTION	DATE	APPR.

U.S. ARMY CORPS OF ENGINEERS
GALVESTON DISTRICT
GALVESTON, TEXAS

DESIGNED BY: J.R.;J.K.
DWN BY: D.S.;V.R.
CKD BY: D.L.;G.K.
SUBMITTED BY: D.LOVETT/G.KOTZENBERGER
DATE: DD-MON-YYYY
SOLICITATION NO.: N/A
CONTRACT NO.: N/A
PLOT SCALE: 1:1
PLOT DATE: YYYY-MM-DD-YYYY
FILE NUMBER: 1-Initial-submit
SIZE: ANSI D
FILE NAME: G-001.dgn

TETRA TECH
400 112TH AVE NE
SUITE 300 BELLEVE, WA 98004

GULF INTRACOASTAL WATERWAY
BRAZOS RIVER FLOODGATES AND COLORADO
RIVER LOCKS SYSTEMS, FEASIBILITY STUDY
ENGINEERING APPENDIX DRAWINGS

COVER SHEET

SHEET
IDENTIFICATION
G-001

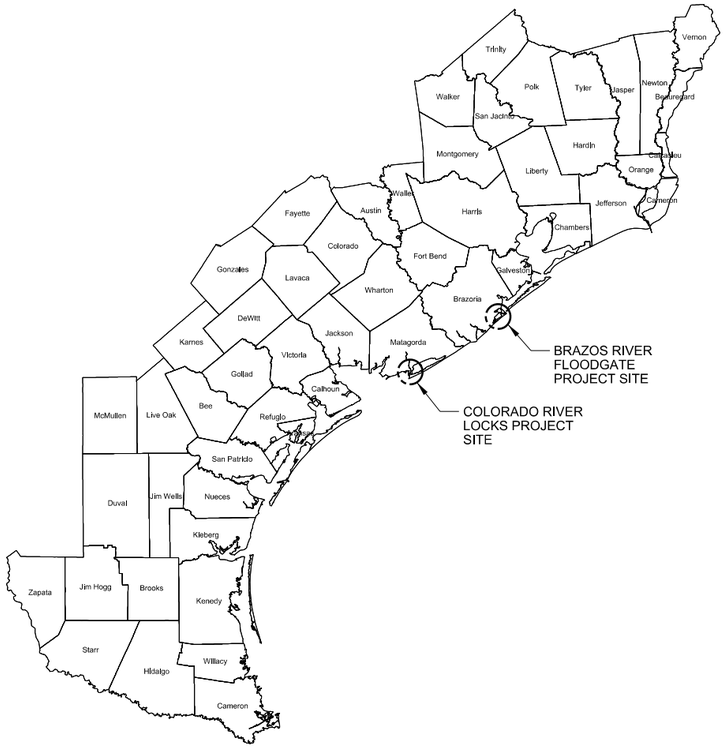

LOCATION MAP

SCALE: N.T.S.

VICINITY MAP

SCALE: N.T.S.

INDEX OF DRAWING

G-001	COVER SHEET	S-201	CHANNEL TRUSS - 125' SECTOR GATE
G-002	LOCATION AND VICINITY MAPS INDEX OF DRAWINGS	S-202	MIDDLE TRUSS - 125' SECTOR GATE
C-101	COLORADO RIVER LOCKS - EXISTING SITE PLAN	S-203	RECESS TRUSS - 125' SECTOR GATE
C-102	COLORADO RIVER LOCKS - FINAL SITE PLAN	S-301	MASONRY SECTIONS
C-103	COLORADO RIVER LOCKS - WEST FINAL SITE PLAN	S-302	NEEDLE GIRDER STORAGE PLATFORM SECTIONS
C-104	COLORADO RIVER LOCKS - EAST FINAL SITE PLAN	S-303	GUIDEWALL SECTION
C-110	BRAZOS RIVER FLOODGATE - PLAN	S-401	FENDER - 125' STEEL GATE LEAF
C-111	BRAZOS RIVER FLOODGATE - EAST SITE PLAN	S-402	NEEDLE GIRDER & SUPPORT TOWERS
C-301	COLORADO RIVER LOCKS - TYPICAL SECTION	S-403	DEWATERING NEEDLES
C-302	BRAZOS RIVER FLOODGATE - TYPICAL SECTION	S-404	END CELL DOLPHIN
S-101	MASONRY PLAN - 125' SECTOR GATE	S-405	COFFERDAM
S-102	FOUNDATION PLAN - 125' SECTOR GATE	S-501	HINGE ASSEMBLY AND DETAILS
S-103	TOP FRAME - 125' SECTOR GATE	S-502	PINTLE ASSEMBLY AND DETAILS
S-104	MIDDLE FRAME - 125' SECTOR GATE	E-601	ELECTRICAL DIAGRAM AND SCHEDULE
S-105	LOWER FRAME - 125' SECTOR GATE	M-901	GATE OPERATING MACHINERY
S-106	GUIDEWALL PLAN - 125' SECTOR GATE		
S-107	NEEDLE GIRDER STORAGE PLATFORM - 125' SECTOR GATE		

US Army Corps of Engineers®
GALVESTON DISTRICT

MARK	DESCRIPTION	DATE	APPR.	MARK	DESCRIPTION	DATE	APPR.

U.S. ARMY CORPS OF ENGINEERS
GALVESTON DISTRICT
GALVESTON, TEXAS

DESIGNED BY: JR/JK
DATE: DD-MON-YYYY
DWN BY: DJS/VR
CKD BY: DL/GK
SOLICITATION NO.: N/A
SUBMITTED BY: D.LOVETTG KOTZENBERGER
CONTRACT NO.: N/A
PLOT SCALE: 1:1
PLOT DATE: MMM-DD-YYYY
FILE NUMBER: H:\dwg\dwg\
SIZE: ANSI D
FILE NAME: G-002.dgn

TETRA TECH
400 112TH AVE NE
SUITE 300 BELIEVE, WA 98004

GULF INTRACOASTAL WATERWAY
BRAZOS RIVER FLOODGATES AND COLORADO RIVER LOCKS SYSTEMS, FEASIBILITY STUDY
ENGINEERING APPENDIX DRAWINGS

LOCATION AND VICINITY MAPS
INDEX OF DRAWINGS

SHEET IDENTIFICATION
G-002

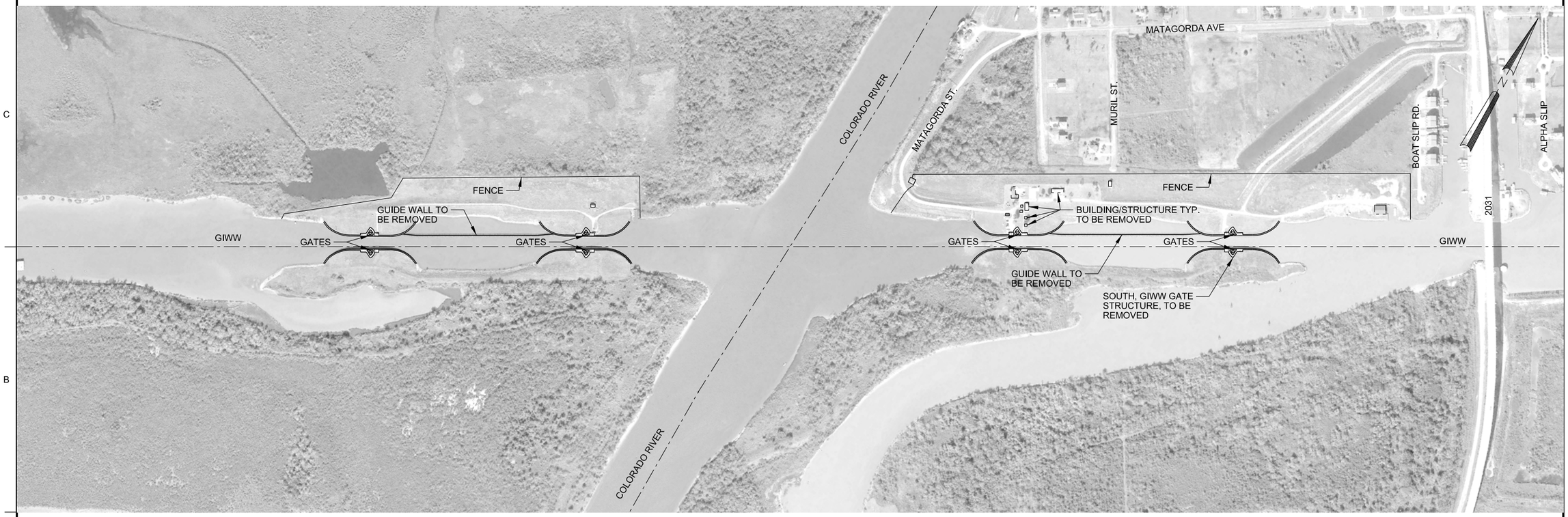

EXISTING SITE PLAN

SCALE:1"=300'

0 300' 600'

US Army Corps of Engineers®
GALVESTON DISTRICT

MARK	DESCRIPTION	DATE	APPR.	MARK	DESCRIPTION	DATE	APPR.

U.S. ARMY CORPS OF ENGINEERS
GALVESTON DISTRICT
GALVESTON, TEXAS

DESIGNED BY: JR/JJK
DATE: DD-MON-YYYY
DWN BY: DJ/JVR
CKD BY: DJ/JJK
SOLICITATION NO.: N/A
SUBMITTED BY: D.LOVETTG KOTZENBERGER
CONTRACT NO.: N/A
PLOT SCALE: 1:1
PLOT DATE: MMM-DD-YYYY
FILE NUMBER: 14444444
SIZE: ANSI D
FILE NAME: C-101.dgn

TETRA TECH
400 112TH AVE NE
SUITE 300 BELLEVUE, WA 98004

GULF INTRACOASTAL WATERWAY
BRAZOS RIVER FLOODGATES AND COLORADO RIVER LOCKS SYSTEMS, FEASIBILITY STUDY
ENGINEERING APPENDIX DRAWINGS

EXISTING SITE PLAN

SHEET IDENTIFICATION
C-101

CONSTRUCTION SEQUENCE

1. PILE TEST
2. DREDGE ACCESS CHANNEL ON GIWW SIDE OF EACH STRUCTURE FOR CRANE ACCESS.
3. DRIVE PRODUCTION PILING FOR GATE STRUCTURE IN WET.
4. PLACE COFFERDAM
5. CONSTRUCT GATE STRUCTURE
6. REMOVE COFFERDAM
7. CONSTRUCT GUIDE WALLS AND END CELLS (SOME CONCURRENT WITH GATE CONSTRICTION)
8. CONSTRUCT ROCK TRAINING WALL
9. COMPLETE DREDGING OF NEW CHANNEL
10. TRANSFER NAVIGATION TO NEW STRUCTURE
11. COMPLETE DEMOLITION/BUILD ACCESS LEVEE

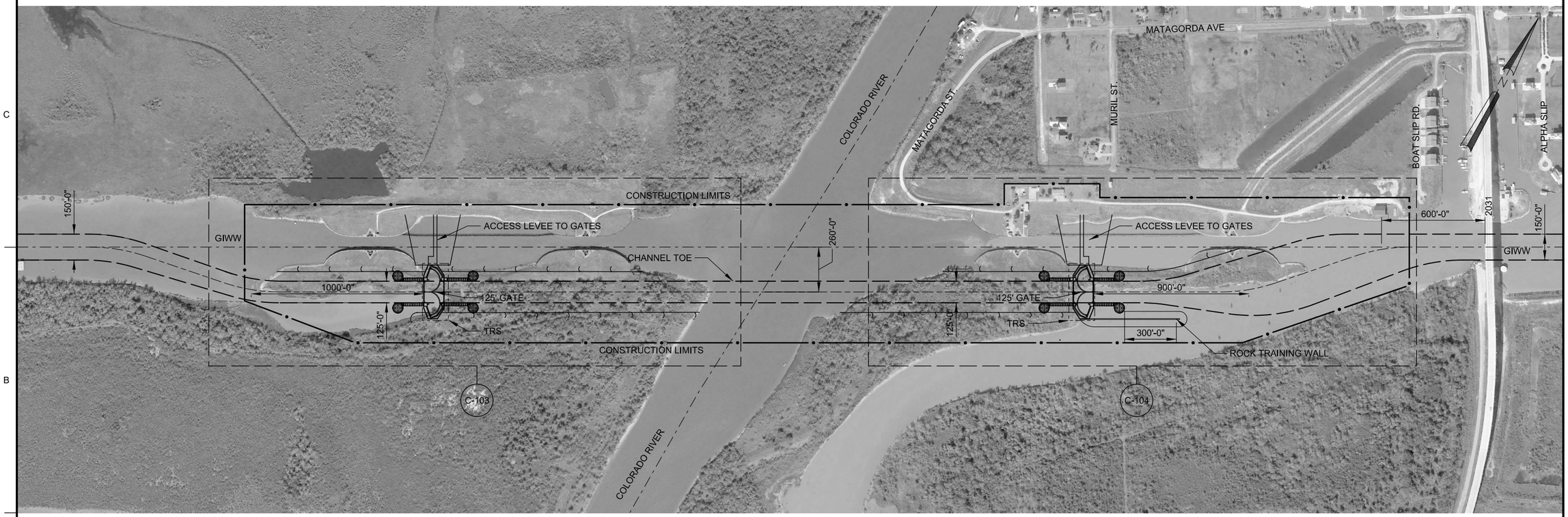

FINAL SITE PLAN

SCALE:1"=300'

0 300' 600'

US Army Corps of Engineers®
GALVESTON DISTRICT

MARK	DESCRIPTION	DATE	APPR.	MARK	DESCRIPTION	DATE	APPR.

U.S. ARMY CORPS OF ENGINEERS
GALVESTON DISTRICT
GALVESTON, TEXAS

DESIGNED BY: JR/JJK
DWN BY: DJS/ VR
CKD BY: DJL/GJK
SUBMITTED BY: D.LOVETT/G.KOTZENBERGER
PLOT SCALE: 1:1
PLOT DATE: YYYY/MM/DD
SIZE: ANSI D
FILE NAME: C-102.dgn
DATE: DD-MON-YYYY
SOLICITATION NO.: N/A
CONTRACT NO.: N/A
FILE NUMBER: HAM-00000
TETRA TECH
400 112TH AVE NE
SUITE 300 BELLEVE, WA 98004

GULF INTRACOASTAL WATERWAY
BRAZOS RIVER FLOODGATES AND COLORADO RIVER LOCKS SYSTEMS, FEASIBILITY STUDY
ENGINEERING APPENDIX DRAWINGS

COLORADO RIVER LOCK
FINAL SITE PLAN

SHEET IDENTIFICATION
C-102

US Army Corps of Engineers®
GALVESTON DISTRICT

MARK	DESCRIPTION	DATE	APPR.	MARK	DESCRIPTION	DATE	APPR.

U.S. ARMY CORPS OF ENGINEERS
GALVESTON DISTRICT
GALVESTON, TEXAS

TETRA TECH
400 112TH AVE NE
SUITE 300 BELLEVE, WA 98004

DESIGNED BY: JR;JJK
DATE: DD-MO-YYYY
DWN BY: DJ; VR
CKD BY: DJ; GJL
SOLICITATION NO.: N/A
SUBMITTED BY: D LOVETTG KOTZENBERGER
CONTRACT NO.: N/A
PLOT SCALE: 1:1
PLOT DATE: DD-MO-YYYY
FILE NUMBER: 1-1-1-1-1-1-1-1
SIZE: ANSI D
FILE NAME: C-103.dgn

GULF INTRACOASTAL WATERWAY
BRAZOS RIVER FLOODGATES AND COLORADO RIVER LOCKS SYSTEMS, FEASIBILITY STUDY
ENGINEERING APPENDIX DRAWINGS

COLORADO RIVER LOCKS
WEST FINAL SITE PLAN

SHEET IDENTIFICATION
C-103

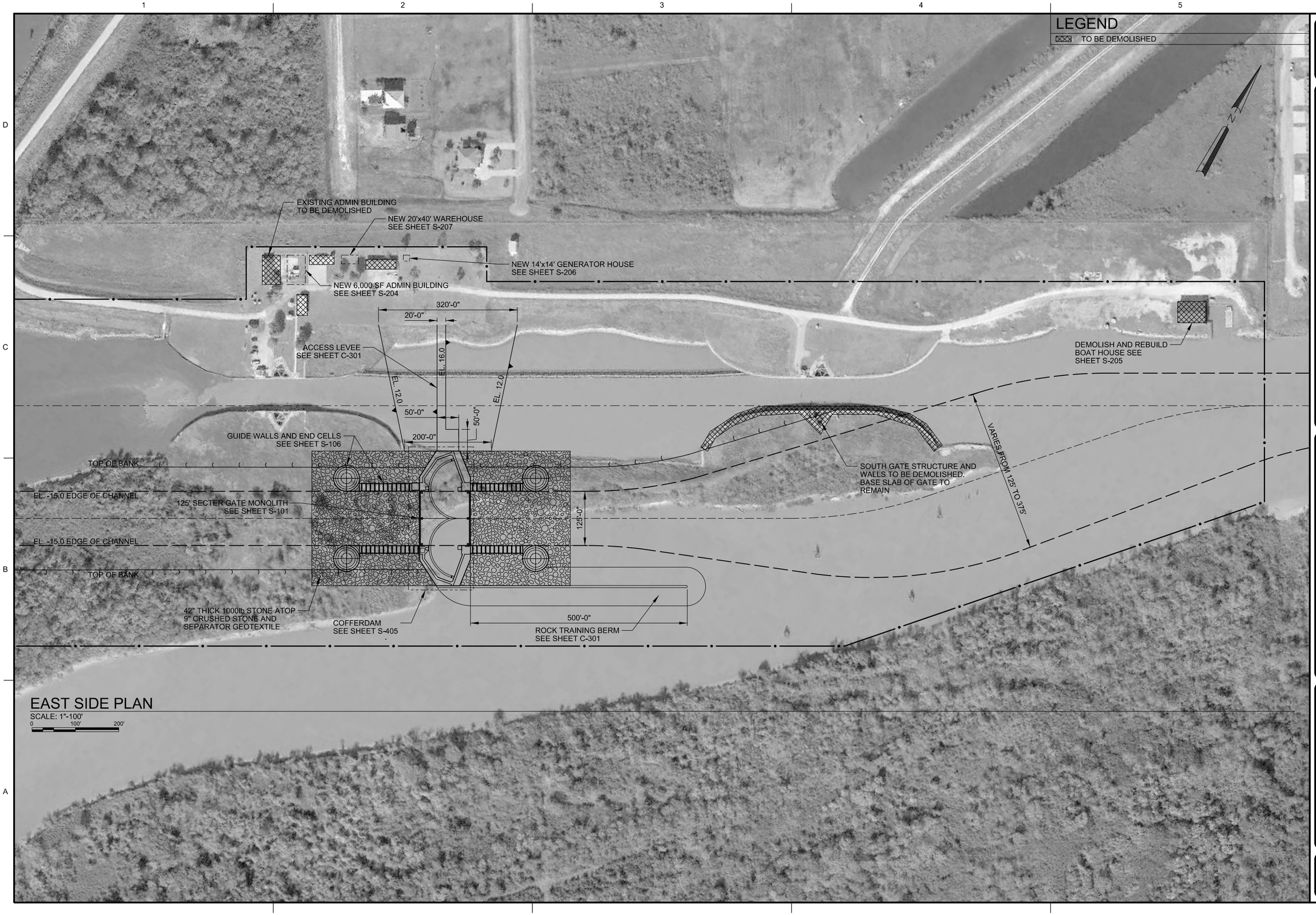

US Army Corps of Engineers
GALVESTON DISTRICT

MARK	DESCRIPTION	DATE	APPR.	MARK	DESCRIPTION	DATE	APPR.

U.S. ARMY CORPS OF ENGINEERS
GALVESTON DISTRICT
GALVESTON, TEXAS

TETRA TECH
400 112TH AVE NE
SUITE 300 BELIEVE, WA 98004

DESIGNED BY: J.R.;J.K.
DWN BY: D.S.;V.R.
CKD BY: D.L.;G.K.
SUBMITTED BY: D.LORETTO KOTZENBERGER
DATE: DD-MON-YYYY
SOLICITATION NO.: N/A
CONTRACT NO.: N/A
FILE NUMBER: Model-related
PLOT SCALE: 1:1
PLOT DATE: MM-DD-YY
SIZE: ANSI D
FILE NAME: C-104.dgn

GULF INTRACOASTAL WATERWAY
BRAZOS RIVER FLOODGATES AND COLORADO RIVER LOCKS SYSTEMS, FEASIBILITY STUDY
ENGINEERING APPENDIX DRAWINGS

COLORADO RIVER LOCKS
WEST FINAL SITE PLAN

SHEET IDENTIFICATION
C-104

SUGGESTED CONSTRUCTION SEQUENCE NOTES:

1. THE EXISTING FLOOD GATES ON THE EAST AND WEST SIDES OF THE BRAZOS RIVER REMAIN FULLY OPERATIONAL DURING THE ESTIMATED 2-YEAR CONSTRUCTION PERIOD FOR THE NEW 125-FOOT GATE AND CHANNEL.
2. PILE TEST (CONTRACT PRIOR TO MAIN CONSTRUCTION CONTRACT)
3. DRIVE PRODUCTION PILING FOR GATE STRUCTURE IN WET
4. PLACE COFFERDAM
5. CONSTRUCT GATE STRUCTURE
6. REMOVE COFFERDAM
7. CONSTRUCT GUIDEWALLS AND END CELL (SOME COULD BE CONCURRENT WITH GATE CONSTRUCTION)
8. REMOVE PLUG AT RIVER ON BOTH SIDES OF RIVER AND COMPLETE DREDGING OF NEW CHANNEL (7 AND 8 COULD BE CONCURRENT.)
9. TRANSFER NAVIGATION TRAFFIC TO NEW STRUCTURE AND NEW GIWW CHANNEL
10. COMPLETE DEMOLITION/DECOMMISSIONING OF SOUTHERN EXISTING STRUCTURE AND BUILD LEVEE ACCESS TO NEW STRUCTURE (NOTE BOAT ACCESS ONLY FOR NEW GATE OPERATORS UNTIL THIS IS UNDER CONSTRUCTION)

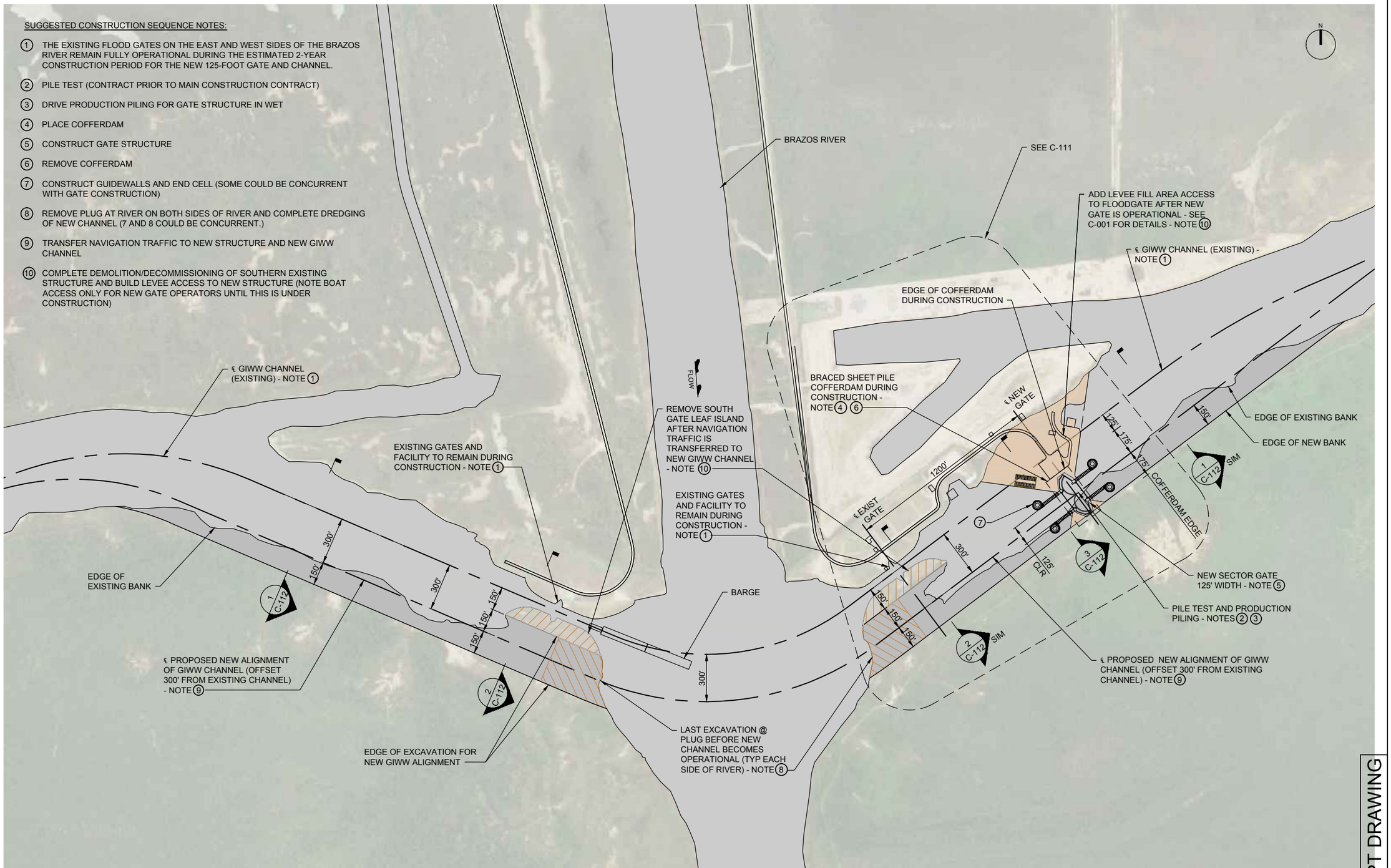

PLAN - TSP ALTERNATIVE 3A.1 - SOUTH SHIFT OF ALIGNMENT

SCALE: 1"=300'-0"

0 300' 600'

CONCEPT DRAWING

US Army Corps of Engineers®

MARK	DESCRIPTION	DATE

ISSUE DATE: 9/28/2018
SOLICITATION NO.:
CONTRACT NO.:

DESIGNED BY: J. KIKUTA
DRAWN BY: V.ROUSE
CHECKED BY: G.KATZENBERGER
SUBMITTED BY: G.KATZENBERGER
SIZE: ANSI D

GALVESTON DISTRICT
P.O. BOX 1229
GALVESTON, TX 77553-1229

TETRA TECH
400 112TH AVENUE NE
SUITE 300
BELLEVUE, WA 98004

BRAZOS RIVER FLOODGATES
FEASIBILITY STUDY
BRAZORIA COUNTY, TX

TSP ALTERNATIVE 3A.1
SOUTH SHIFT OF ALIGNMENT
PLAN

SHEET ID
C-110

%STATUS%

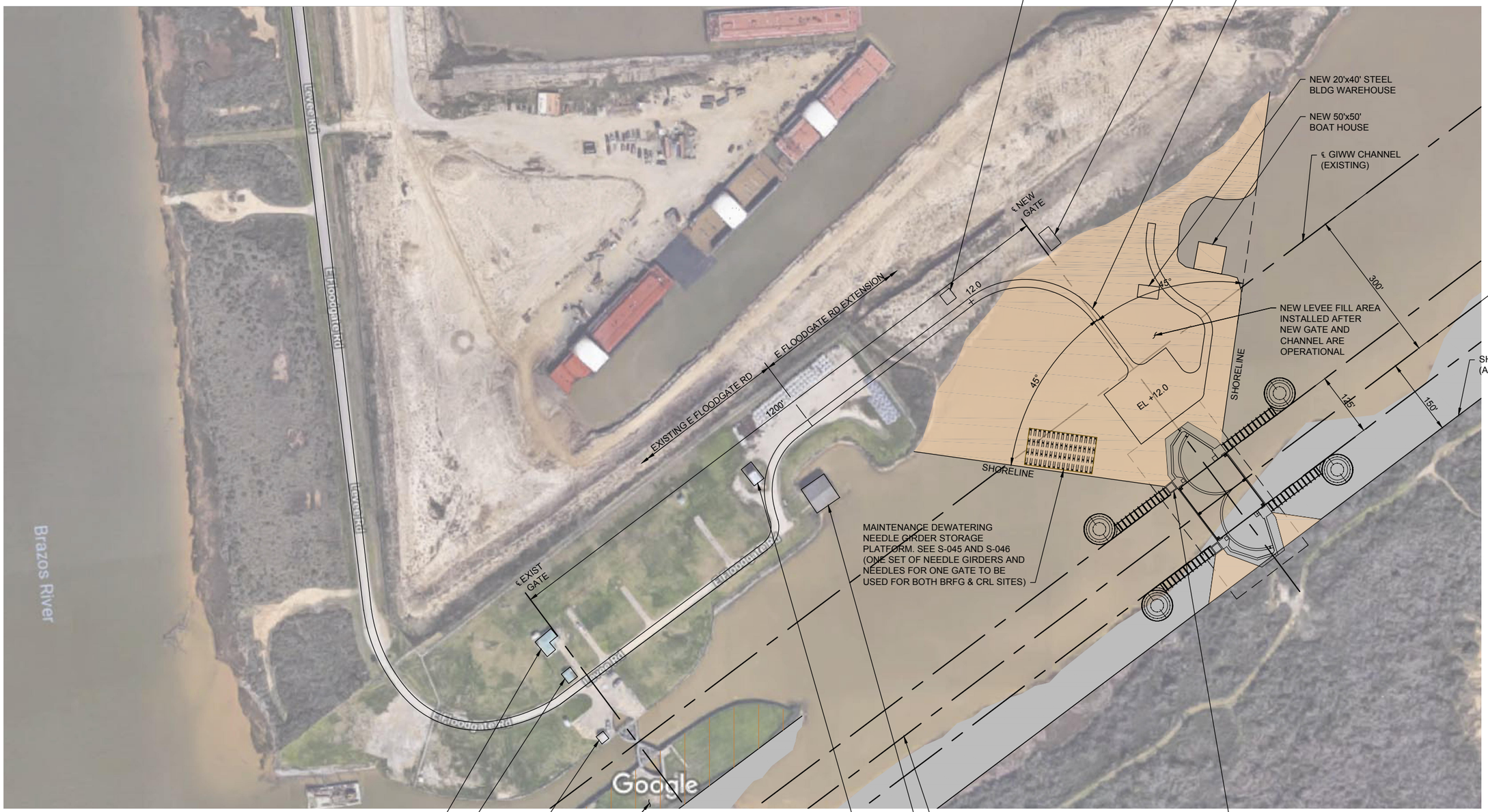

TSP SITE PLAN

SCALE: 1"=100'-0"

100' 0' 100' 200' 300'

CONCEPT DRAWING

US Army Corps of Engineers®

MARK	DESCRIPTION	DATE

DESIGNED BY: J. KIKUTA
DRAWN BY: V.ROUSE
CHECKED BY: G.KATZENBERGER
SUBMITTED BY: G.KATZENBERGER
SIZE: ANSI D
ISSUE DATE: 9/28/2018
SOLICITATION NO.:
CONTRACT NO.:

GALVESTON DISTRICT
P.O. BOX 1229
GALVESTON, TX 77553-1229

TETRA TECH
400 112TH AVENUE NE
SUITE 300
BELLEVUE, WA 98004

BRAZOS RIVER FLOODGATES
FEASIBILITY STUDY
BRAZORIA COUNTY, TX

TSP SITE PLAN

SHEET ID

C-111

%STATUS%

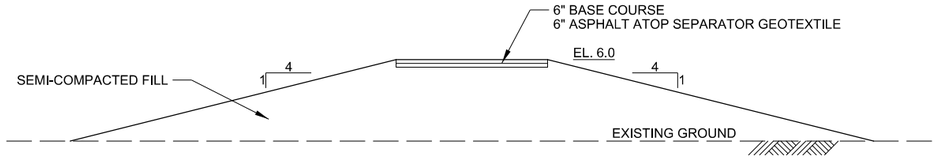

TYPICAL SECTION - ACCESS ROAD

SCALE: 1"=10'-0"

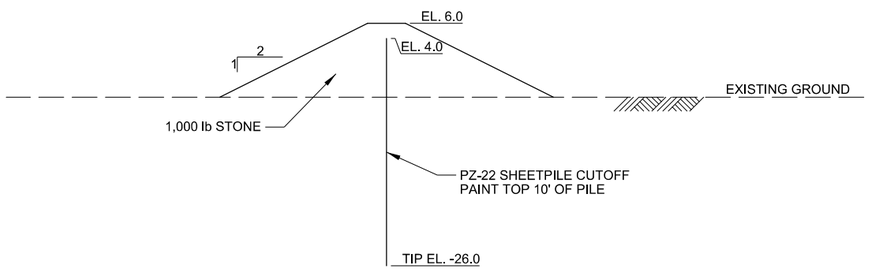

TYPICAL SECTION - ROCK TRAINING WALL

SCALE: 1"=10'-0"

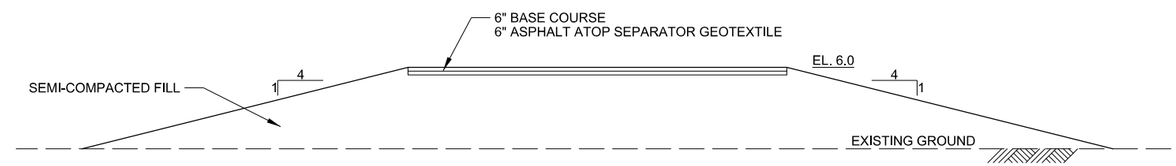

TYPICAL SECTION - ACCESS ROAD AT STRUCTURE

SCALE: 1"=10'-0"

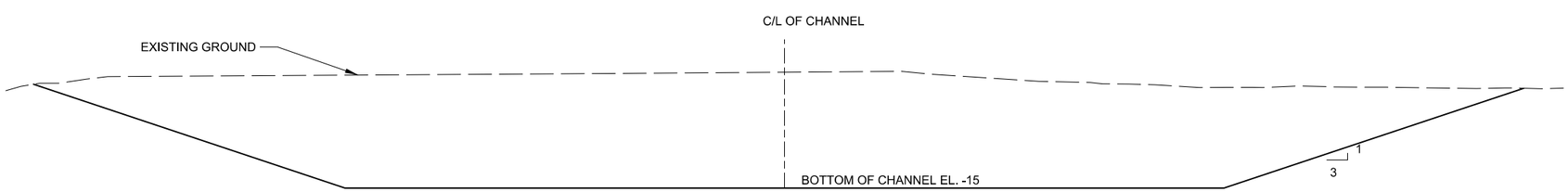

TYPICAL SECTION - CHANNEL

SCALE: 1"=10'-0"

US Army Corps of Engineers®
GALVESTON DISTRICT

MARK	DESCRIPTION	DATE	APPR.

MARK	DESCRIPTION	DATE	APPR.

U.S. ARMY CORPS OF ENGINEERS
GALVESTON DISTRICT
GALVESTON, TEXAS

DESIGNED BY: LR/JJK
DWN BY: DJL/VR
CKD BY: DJL/GJK
SUBMITTED BY: D LOVETTG KOTZENBERGER
PLOT SCALE: 1:1
PLOT DATE: MMM-DD-YYYY
DATE: DD-MMM-YYYY
SOLICITATION NO.: N/A
CONTRACT NO.: N/A
FILE NUMBER: H:\dist\dist\
SIZE: ANSI D
FILE NAME: C-301.dgn

TETRA TECH
400 112TH AVE NE
SUITE 300 BELIEVE, WA 98004

GULF INTRACOASTAL WATERWAY
BRAZOS RIVER FLOODGATES AND COLORADO RIVER LOCKS SYSTEMS, FEASIBILITY STUDY
ENGINEERING APPENDIX DRAWINGS

COLORADO RIVER
TYPICAL SECTIONS

SHEET IDENTIFICATION
C-301

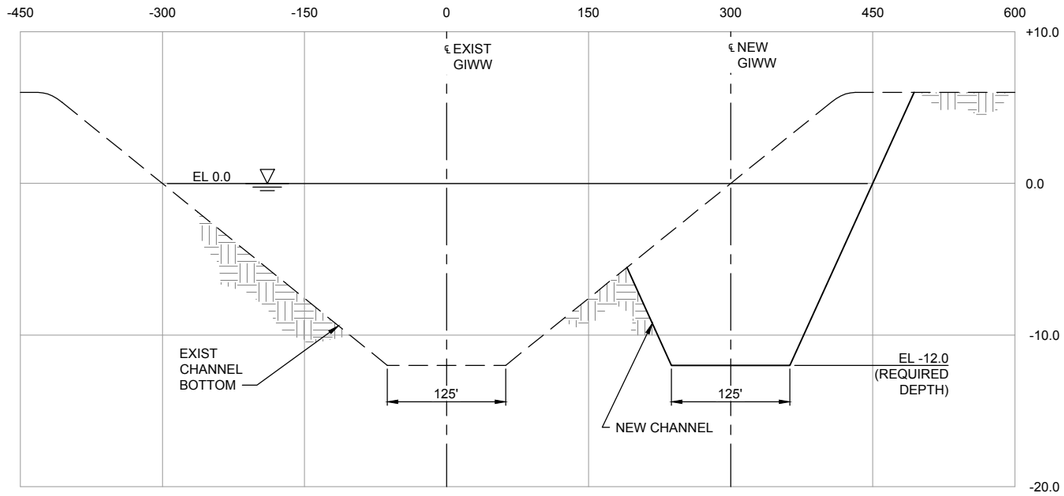

1 C-110 **SECTIONS**
HORIZONTAL SCALE: 1"=80'
VERTICAL SCALE: 1" = 5'

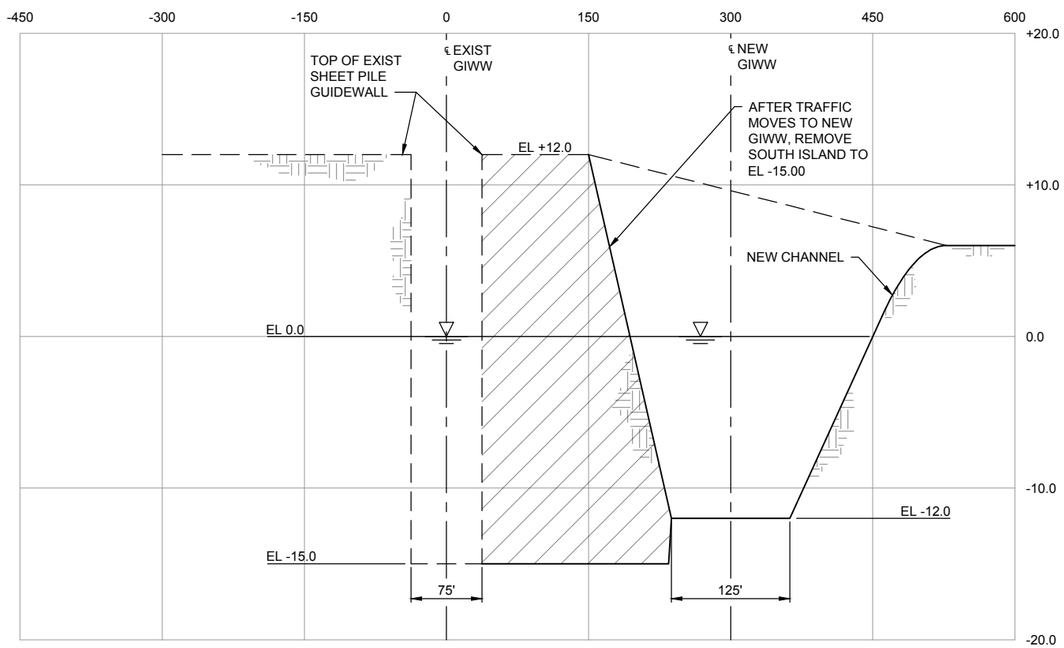

2 C-110 **SECTIONS**
HORIZONTAL SCALE: 1"=80'
VERTICAL SCALE: 1" = 5'

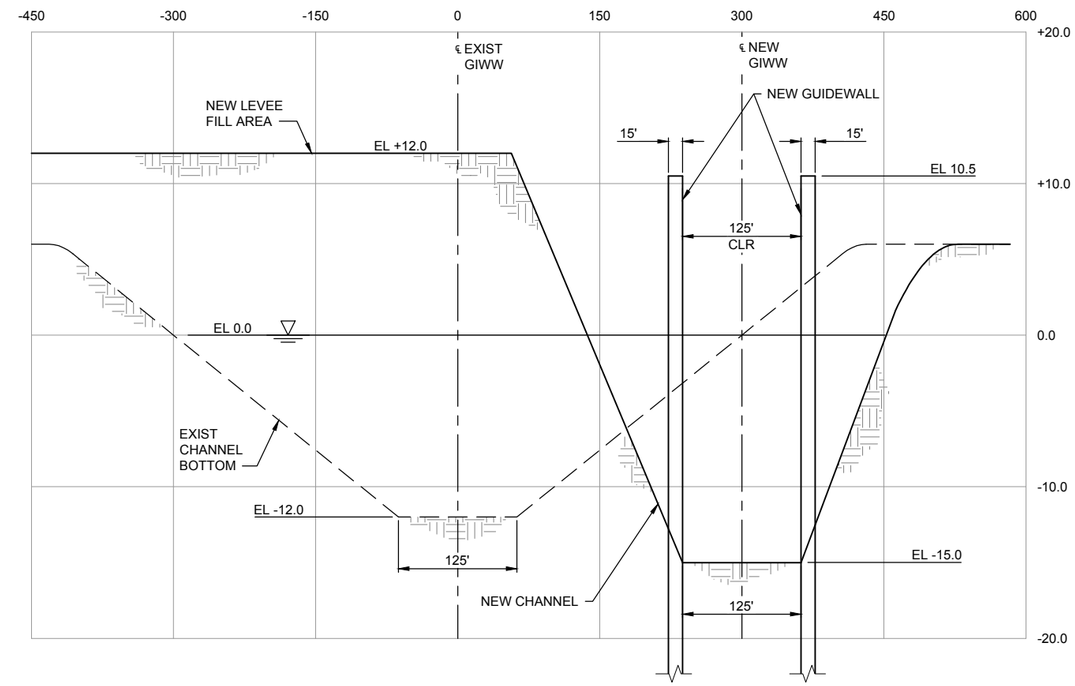

3 C-110 **SECTIONS**
HORIZONTAL SCALE: 1"=80'
VERTICAL SCALE: 1" = 5'

0 80' 160' 0 5' 10'

CONCEPT DRAWING

US Army Corps of Engineers®

MARK	DESCRIPTION	DATE

DESIGNED BY: J. KIKUTA
DRAWN BY: V.ROUSE
CHECKED BY: G.KATZENBERGER
SUBMITTED BY: G.KATZENBERGER
SIZE: ANSI D
ISSUE DATE: 9/28/2018
SOLICITATION NO.:
CONTRACT NO.:

GALVESTON DISTRICT
P.O. BOX 1229
GALVESTON, TX 77553-1229

TETRA TECH
400 112TH AVENUE NE
SUITE 300
BELLEVUE, WA 98004

BRAZOS RIVER FLOODGATES
FEASIBILITY STUDY
BRAZORIA COUNTY, TX

SECTIONS

SHEET ID
C-302

%STATUS%

NOTES:

1. ALL PILES SHALL RECEIVE TENSION ANCHORS.

2. ALL PIPE PILES SHALL MEET THE REQUIREMENTS OF API 5L, GRADE X 52.

3. SHEET PILING SHALL MEET THE REQUIREMENTS OF ASTM A572, GRADE 50.

LEGEND

30" PIPE PILE
BATTERED 1H ON 4V

INDICATES DIRECTION OF BATTER

LOCATION	PILE CUTOFF EL.	PILE TIP EL.	PILE LENGTH	SHEET PILE CUTOFF EL.	SHEET PILE TIP EL.
COLORADO EAST	-25.0	-105.0	83	-25.0	-46.0
COLORADO WEST	-25.0	-120.0	98	-25.0	-50.5
BRAZOS EAST	-25.0	-110.0	88	-25.0	-46.0

PROTECTED SIDE

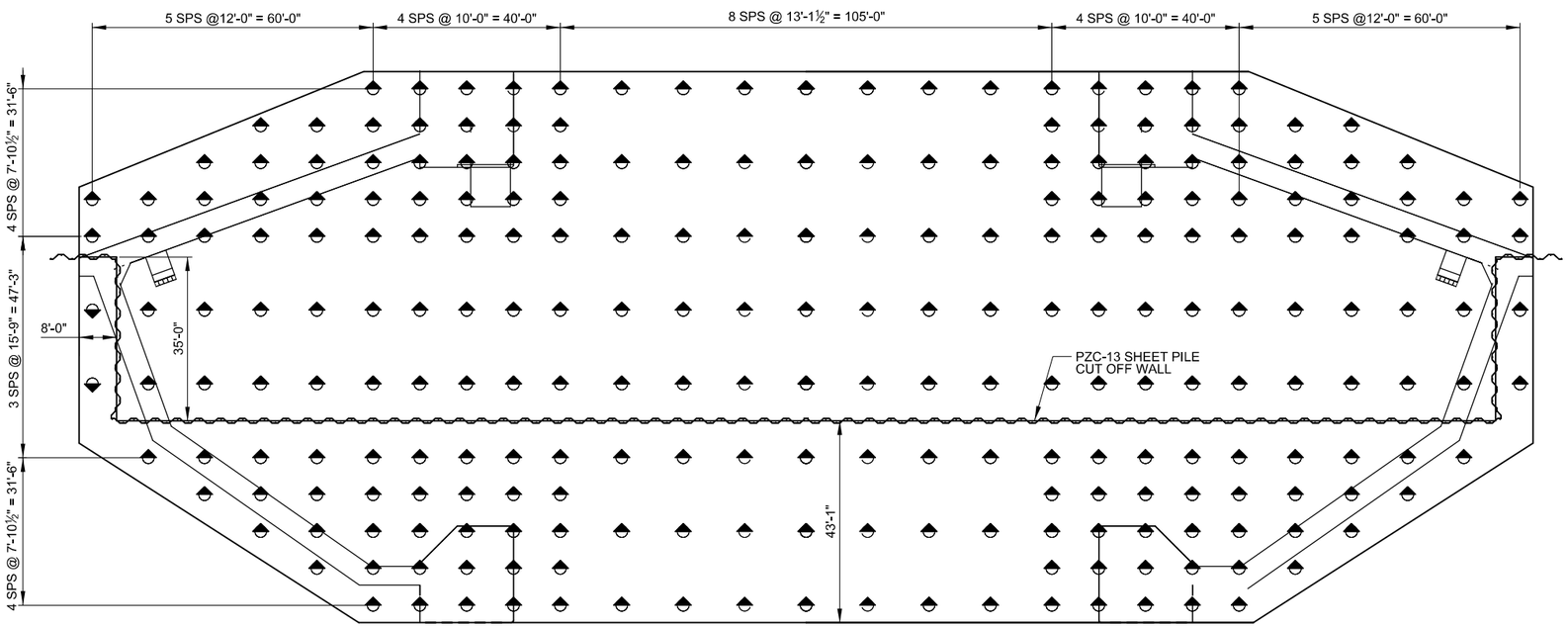

FLOOD SIDE

FOUNDATION PLAN

SCALE: 1/16" = 1'-0"

0 8' 16' 32'

US Army Corps of Engineers®
GALVESTON DISTRICT

MARK	DESCRIPTION	DATE	APPR.

MARK	DESCRIPTION	DATE	APPR.

U.S. ARMY CORPS OF ENGINEERS
GALVESTON DISTRICT
GALVESTON, TEXAS

DESIGNED BY: J.R.;J.K.
DWN BY: D.S.;V.R.
CKD BY: D.L.;G.K.
SUBMITTED BY: D LOVETTIG KOTZENBERGER
DATE: DD-MON-YYYY
SOLICITATION NO.: N/A
CONTRACT NO.: N/A
PLOT SCALE: 1:1
PLOT DATE: MMMDD,YYYY
FILE NUMBER: 0-000-00000
SIZE: ANSI D
FILE NAME: S-102.dgn

TETRA TECH
400 112TH AVE NE
SUITE 300 BELLEVUE, WA 98004

GULF INTRACOASTAL WATERWAY
BRAZOS RIVER FLOODGATES AND COLORADO RIVER LOCKS SYSTEMS, FEASIBILITY STUDY
ENGINEERING APPENDIX DRAWINGS

FOUNDATION PLAN

SHEET IDENTIFICATION
S-102

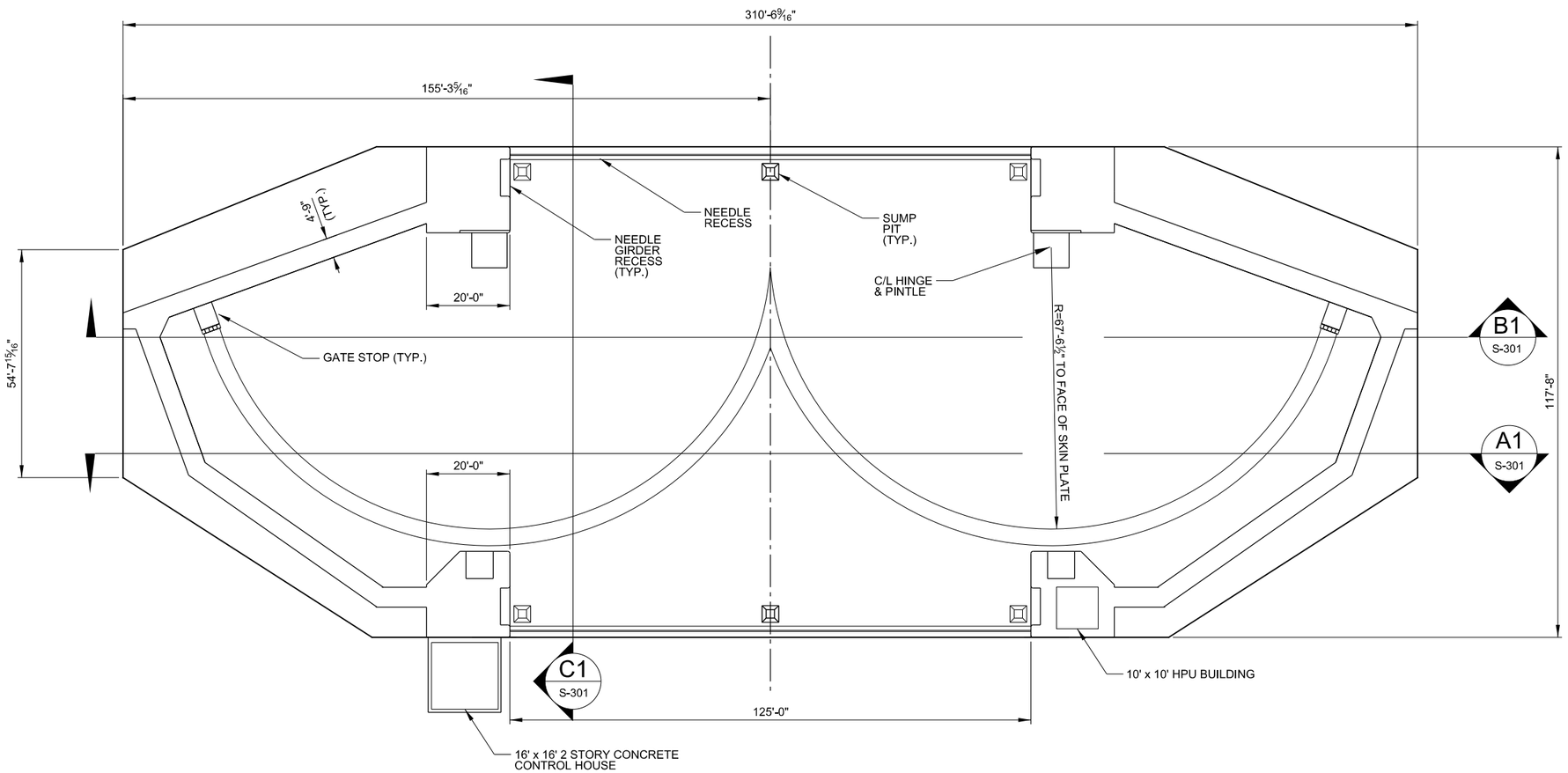

125' SECTOR GATE MASONRY PLAN

SCALE: 1/16" = 1'-0"

0 8' 16' 32'

US Army Corps of Engineers®
GALVESTON DISTRICT

MARK	DESCRIPTION	DATE	APPR.	MARK	DESCRIPTION	DATE	APPR.

U.S. ARMY CORPS OF ENGINEERS
GALVESTON DISTRICT
GALVESTON, TEXAS

TETRA TECH
400 112TH AVE NE
SUITE 300 BELLEVUE, WA 98004

DESIGNED BY: J.R.;J.K.
DWN BY: D.S.;V.R.
CKD BY: DL;GJC
SUBMITTED BY: D.LOVETTS KOTZENBERGER
DATE: DD-MON-YYYY
SOLICITATION NO.: N/A
CONTRACT NO.: N/A
FILE NUMBER: Auto update
PLOT SCALE: 1:1
PLOT DATE: MM-DD-YYYY
SIZE: ANSI D
FILE NAME: S-101.dgn

GULF INTRACOASTAL WATERWAY
BRAZOS RIVER FLOODGATES AND COLORADO RIVER LOCKS SYSTEMS, FEASIBILITY STUDY
ENGINEERING APPENDIX DRAWINGS

MASONRY PLAN

SHEET IDENTIFICATION
S-101

NOTES:

1. ALL PILES SHALL RECEIVE TENSION ANCHORS.

2. ALL PIPE PILES SHALL MEET THE REQUIREMENTS OF API 5L, GRADE X 52.

3. SHEET PILING SHALL MEET THE REQUIREMENTS OF ASTM A572, GRADE 50.

LEGEND

30" PIPE PILE
BATTERED 1H ON 4V

INDICATES DIRECTION OF BATTER

LOCATION	PILE CUTOFF EL.	PILE TIP EL.	PILE LENGTH	SHEET PILE CUTOFF EL.	SHEET PILE TIP EL.
COLORADO EAST	-25.0	-105.0	83	-46.0	-55.00
COLORADO WEST	-25.0	-120.0	93	-50.5	-55.00
BRAZOS EAST	-25.0	-110.0	88	-46.0	-55.00

PROTECTED SIDE

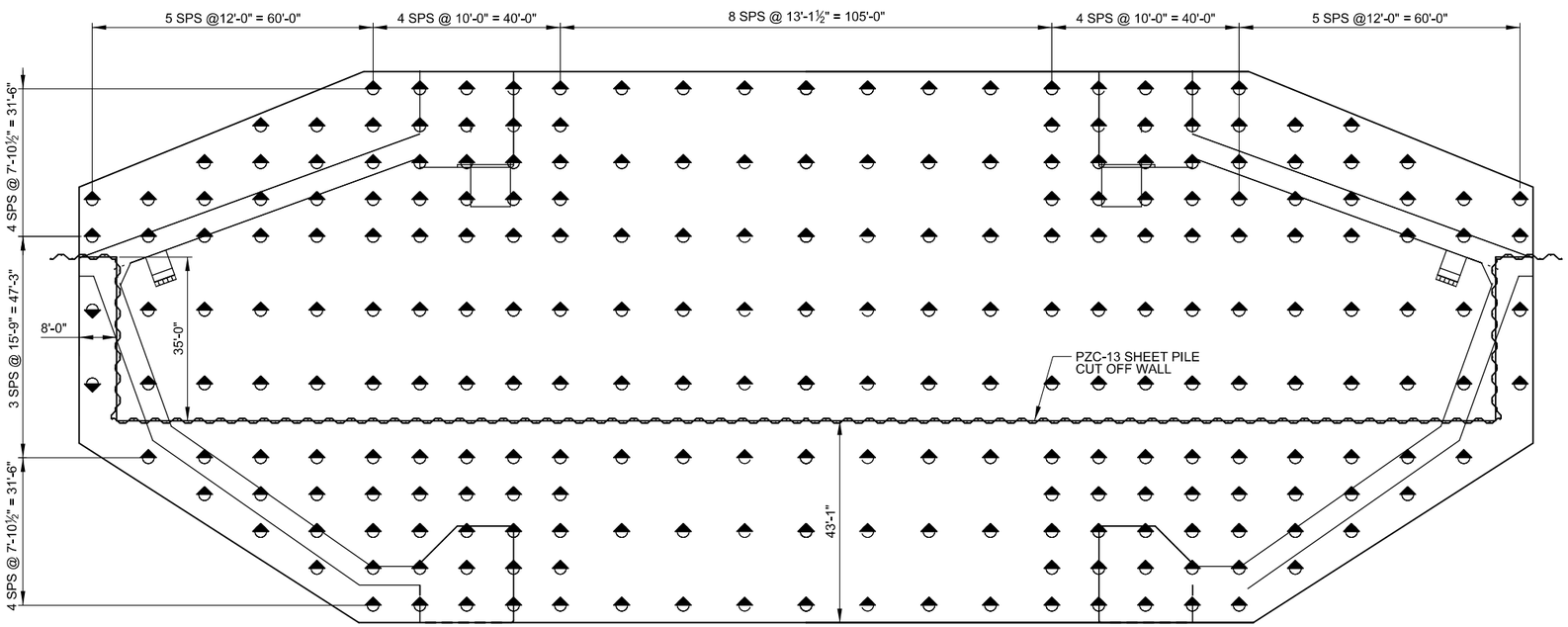

FLOOD SIDE

FOUNDATION PLAN

SCALE: 1/16" = 1'-0"

0 8' 16' 32'

US Army Corps of Engineers®
GALVESTON DISTRICT

MARK	DESCRIPTION	DATE	APPR.

MARK	DESCRIPTION	DATE	APPR.

U.S. ARMY CORPS OF ENGINEERS
GALVESTON DISTRICT
GALVESTON, TEXAS

DESIGNED BY: J.R.;J.K.
DWN BY: D.S.;V.R.
CKD BY: D.L.;G.K.
SUBMITTED BY: D LOVETTIG KOTZENBERGER
DATE: DD-MON-YYYY
SOLICITATION NO.: N/A
CONTRACT NO.: N/A
PLOT SCALE: 1:1
PLOT DATE: MMMDD,YYYY
FILE NUMBER: 0-0-0-0-0-0-0
SIZE: ANSI D
FILE NAME: S-102.dgn

TETRA TECH
400 112TH AVE NE
SUITE 300 BELLEVE, WA 98004

GULF INTRACOASTAL WATERWAY
BRAZOS RIVER FLOODGATES AND COLORADO RIVER LOCKS SYSTEMS, FEASIBILITY STUDY
ENGINEERING APPENDIX DRAWINGS

FOUNDATION PLAN

SHEET IDENTIFICATION
S-102

NOTE:

1.) ALL PIPE SECTION SHALL MEET THE REQUIREMENTS OF API 5L, GRADE X52

2.) ALL PLATE AND INTERCOSTALS SHALL MEET THE REQUIREMENTS OF ASTM A709, GRADE 50.

3.) ALL STEEL SHALL BE PAINTED W/ SYSTEM 6AZ, COAL TAR EPOXY WITH ZINC RICH PRIMER.

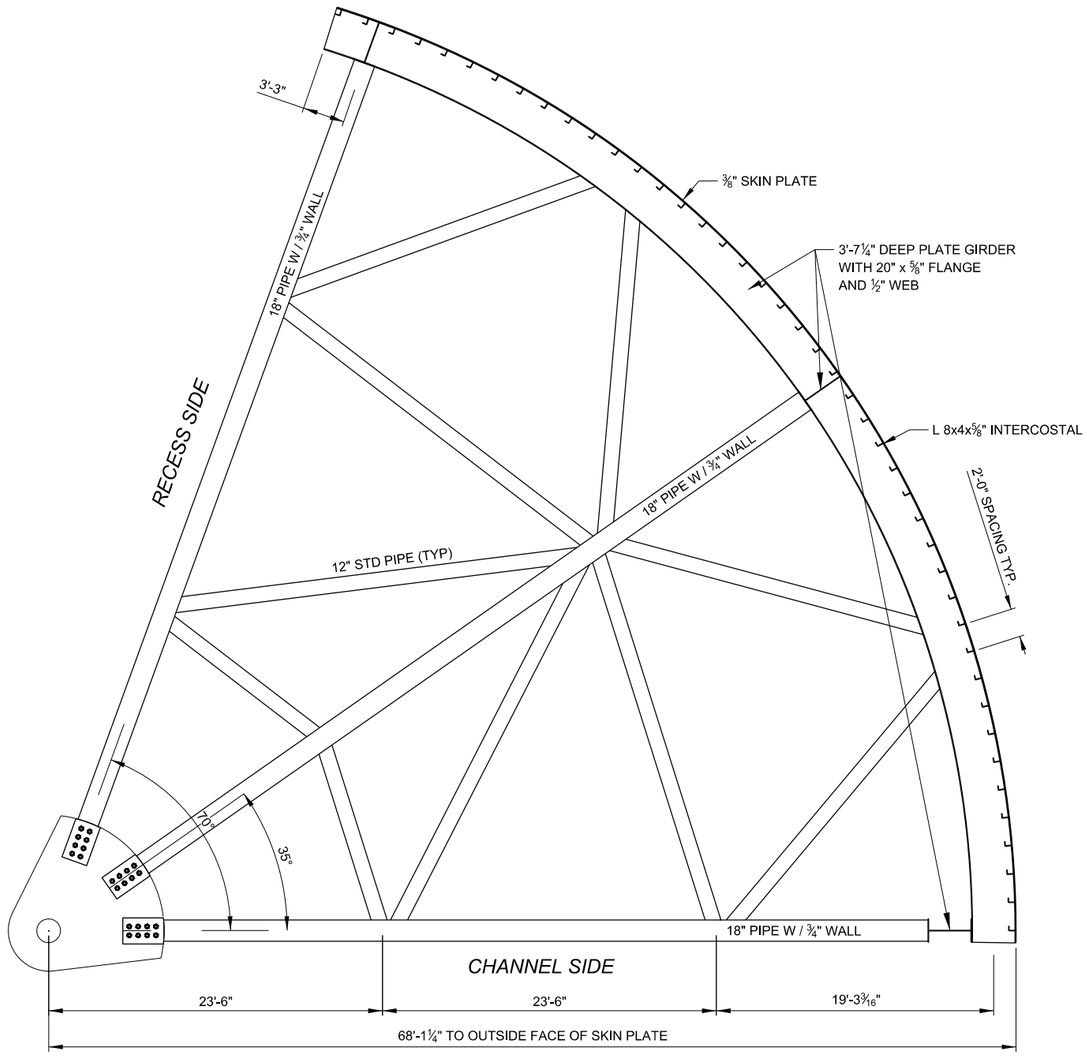

PLAN-TOP HORIZONTAL FRAME

SCALE: 3/16" = 1'-0"

0 4' 8' 16'

US Army Corps of Engineers®
GALVESTON DISTRICT

MARK	DESCRIPTION	DATE	APPR.

MARK	DESCRIPTION	DATE	APPR.

U.S. ARMY CORPS OF ENGINEERS
GALVESTON DISTRICT
GALVESTON, TEXAS

DESIGNED BY: J.R.;J.K.;
DWN BY: D.S.;V.R.;
CKD BY: DJL;GJK;
SUBMITTED BY: D LOVETTIG KOTZENBERGER
PLOT SCALE: 1:1
PLOT DATE: MMDDYYYY
SIZE: ANSI D
FILE NAME: S-103.dgn
DATE: DD-MON-YYYY
SOLICITATION NO.: N/A
CONTRACT NO.: N/A
FILE NUMBER: Filefilefilefile

TETRA TECH
400 112TH AVE NE
SUITE 300 BELIEVE, WA 98004

GULF INTRACOASTAL WATERWAY
BRAZOS RIVER FLOODGATES AND COLORADO RIVER LOCKS SYSTEMS, FEASIBILITY STUDY
ENGINEERING APPENDIX DRAWINGS

TOP FRAME

SHEET IDENTIFICATION
S-103

NOTE:

1.) ALL PIPE SECTION SHALL MEET THE REQUIREMENTS OF API 5L, GRADE X52

2.) ALL PLATE AND INTERCOSTALS SHALL MEET THE REQUIREMENTS OF ASTM A709, GRADE 50.

3.) ALL STEEL SHALL BE PAINTED W/ SYSTEM 6AZ, COAL TAR EPOXY WITH ZINC RICH PRIMER.

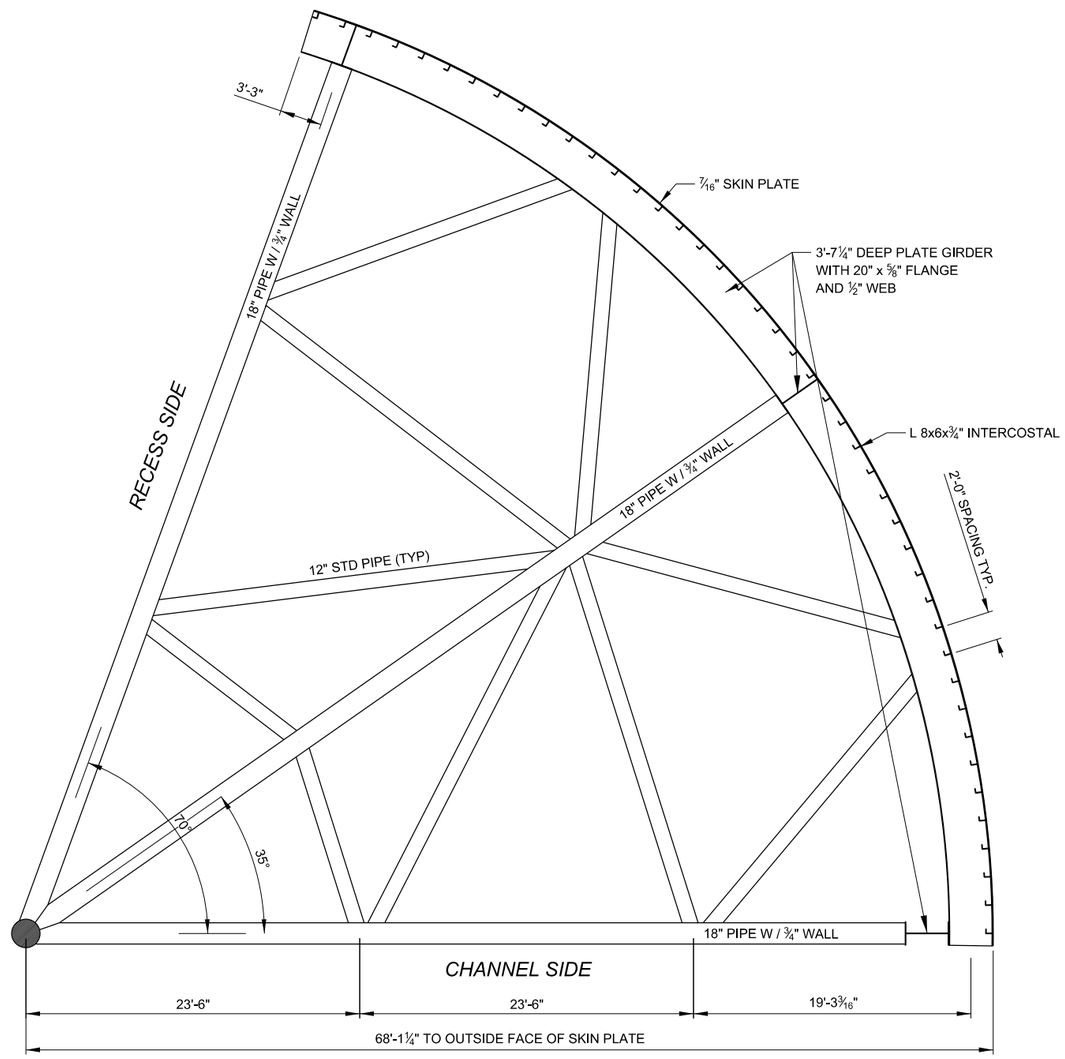

PLAN-MIDDLE HORIZONTAL FRAME

SCALE: 3/16" = 1'-0"

0 4' 8' 16'

US Army Corps of Engineers®
GALVESTON DISTRICT

MARK	DESCRIPTION	DATE	APPR.

MARK	DESCRIPTION	DATE	APPR.

U.S. ARMY CORPS OF ENGINEERS
GALVESTON DISTRICT
GALVESTON, TEXAS

DESIGNED BY: J.R.;J.K.; DATE: DD-MON-YYYY
DWN BY: D.S.; V.R.; CKD BY: DL;GJK; SOLICITATION NO.: N/A
SUBMITTED BY: D LOVETTIG KOTZENBERGER; CONTRACT NO.: N/A
PLOT SCALE: 1:1; PLOT DATE: MMM-YYYY; FILE NUMBER: FUAR#####
SIZE: ANSI D; FILE NAME: S-104.dgn

TETRA TECH
400 112TH AVE NE
SUITE 300 BELIEVE, WA 98004

GULF INTRACOASTAL WATERWAY
BRAZOS RIVER FLOODGATES AND COLORADO RIVER LOCKS SYSTEMS, FEASIBILITY STUDY
ENGINEERING APPENDIX DRAWINGS

MIDDLE FRAME

SHEET IDENTIFICATION
S-104

NOTE:

1.) ALL PIPE SECTION SHALL MEET THE REQUIREMENTS OF API 5L, GRADE X52

2.) ALL PLATE AND INTERCOSTALS SHALL MEET THE REQUIREMENTS OF ASTM A709, GRADE 50.

3.) ALL STEEL SHALL BE PAINTED W/ SYSTEM 6AZ, COAL TAR EPOXY WITH ZINC RICH PRIMER.

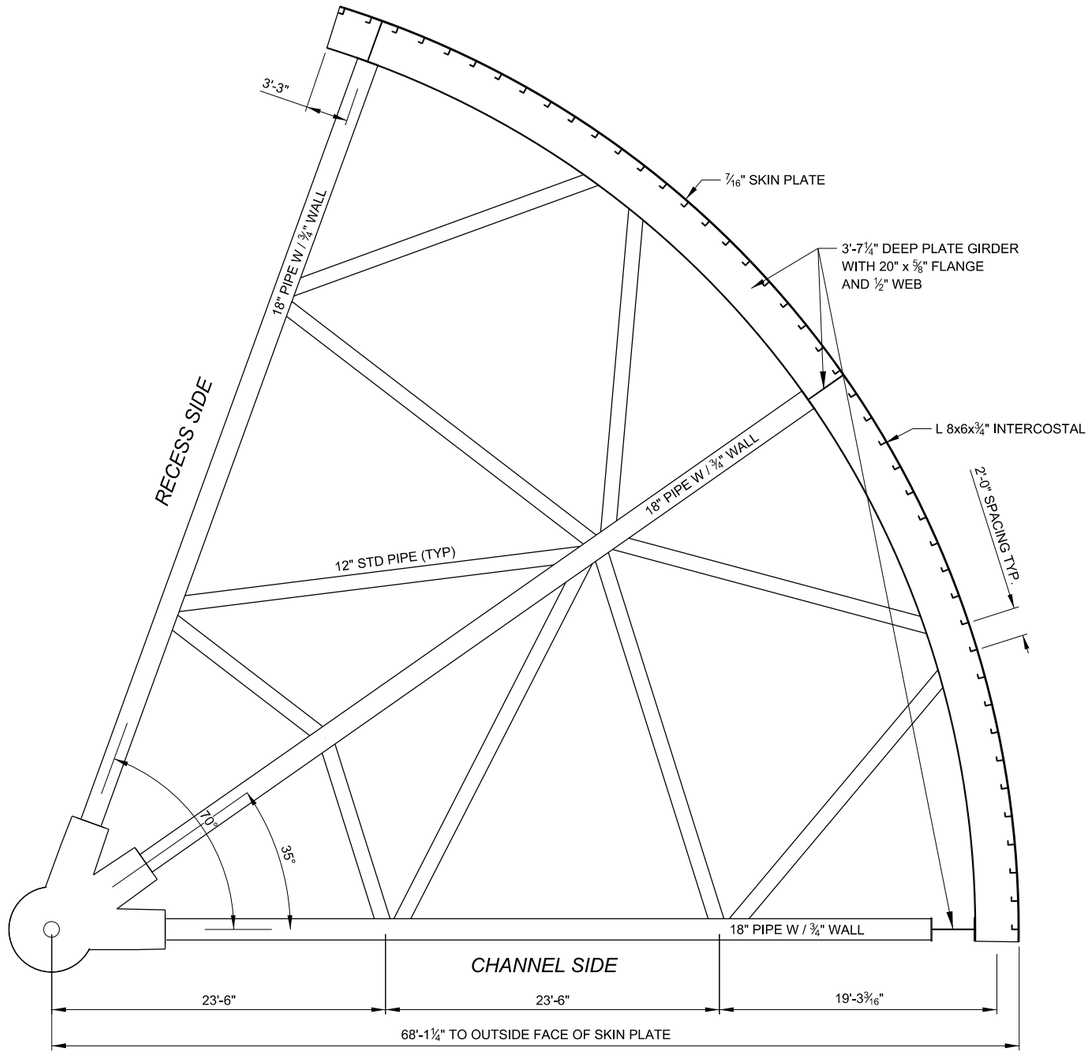

PLAN-LOWER HORIZONTAL FRAME

SCALE: 3/16" = 1'-0"

0 4' 8' 16'

US Army Corps of Engineers®
GALVESTON DISTRICT

MARK	DESCRIPTION	DATE	APPR.

MARK	DESCRIPTION	DATE	APPR.

U.S. ARMY CORPS OF ENGINEERS
GALVESTON DISTRICT
GALVESTON, TEXAS

DESIGNED BY: J.R.;J.K.
DWN BY: D.S.;V.R.
CKD BY: D.L.;G.K.
SUBMITTED BY: D LORETTO KOTZENBERGER
PLOT SCALE: 1:1
PLOT DATE: MMMDD YYYY
SIZE: ANSI D
FILE NAME: S-105.dgn
DATE: DD-MMM-YYYY
SOLICITATION NO.: N/A
CONTRACT NO.: N/A
FILE NUMBER: Fluid solution

TETRA TECH
400 112TH AVE NE
SUITE 300 BELLEVUE, WA 98004

GULF INTRACOASTAL WATERWAY
BRAZOS RIVER FLOODGATES AND COLORADO RIVER LOCKS SYSTEMS, FEASIBILITY STUDY
ENGINEERING APPENDIX DRAWINGS

LOWER FRAME

SHEET IDENTIFICATION
S-105

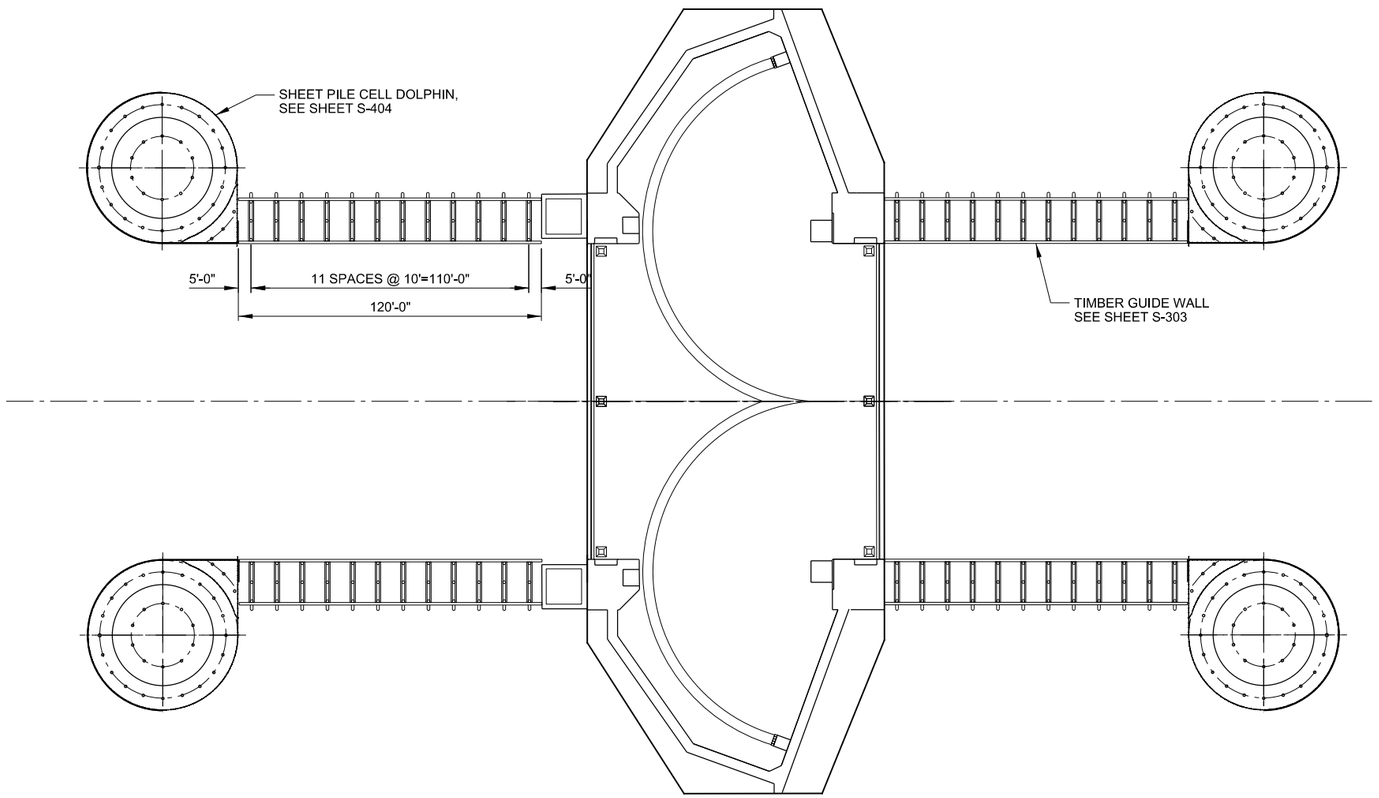

GUIDEWALL PLAN

SCALE: 1" - 30'

0 30' 60'

US Army Corps of Engineers®
GALVESTON DISTRICT

MARK	DESCRIPTION	DATE	APPR.

MARK	DESCRIPTION	DATE	APPR.

U.S. ARMY CORPS OF ENGINEERS
GALVESTON DISTRICT
GALVESTON, TEXAS

TETRA TECH
400 112TH AVE NE
SUITE 300 BELIEVE, WA 98004

DESIGNED BY: JR;JK.
DWN BY: DJ;VR.
CKD BY: DL;GK.
SUBMITTED BY: D LOVETTG KOTZENBERGER
PLOT SCALE: 1:1
PLOT DATE: YYYY/MM/DD
DATE: DD-MON-YYYY
SOLICITATION NO.: N/A
CONTRACT NO.: N/A
FILE NUMBER: H:\dwg\dwg\
SIZE: ANSI D
FILE NAME: S-106.dgn

GULF INTRACOASTAL WATERWAY
BRAZOS RIVER FLOODGATES AND COLORADO RIVER LOCKS SYSTEMS, FEASIBILITY STUDY
ENGINEERING APPENDIX DRAWINGS

GUIDEWALL PLAN

SHEET IDENTIFICATION
S-106

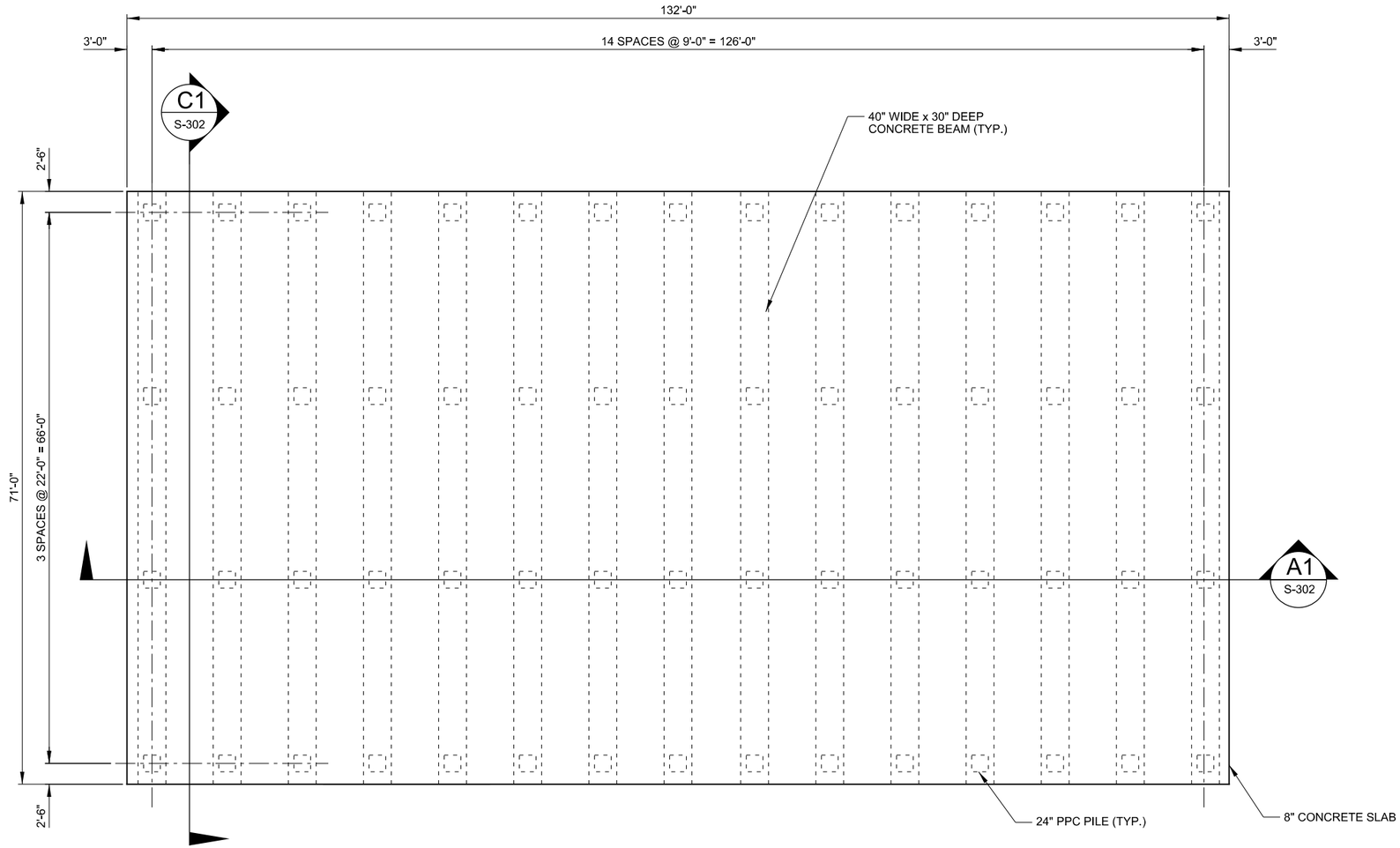

NEEDLE GIRDER STORAGE MASONRY PLAN

SCALE: ⅛" = 1'-0"

0 4' 8' 16'

US Army Corps of Engineers®
GALVESTON DISTRICT

MARK	DESCRIPTION	DATE	APPR.

MARK	DESCRIPTION	DATE	APPR.

U.S. ARMY CORPS OF ENGINEERS
GALVESTON DISTRICT
GALVESTON, TEXAS

DESIGNED BY: JR/JK
DATE: DD-MON-YYYY
DWN BY: DJ/JV/R
CKD BY: DL/GJK
SOLICITATION NO.: N/A
SUBMITTED BY: D.LOVETTIG KOTZENBERGER
CONTRACT NO.: N/A
PLOT SCALE: 1:1
PLOT DATE: YYYY/MM/DD
FILE NUMBER: H:\dwg\dwg\
SIZE: ANSI D
FILE NAME: S-107.dgn

TETRA TECH
400 112TH AVE NE
SUITE 300 BELLEVUE, WA 98004

GULF INTRACOASTAL WATERWAY
BRAZOS RIVER FLOODGATES AND COLORADO RIVER LOCKS SYSTEMS, FEASIBILITY STUDY
ENGINEERING APPENDIX DRAWINGS

NEEDLE GIRDER STORAGE PLATFORM

SHEET IDENTIFICATION
S-107

NOTE:

1.) ALL PIPE SECTION SHALL MEET THE REQUIREMENTS OF API 5L, GRADE X52

2.) ALL PLATE AND INTERCOSTALS SHALL MEET THE REQUIREMENTS OF ASTM A709, GRADE 50.

3.) ALL STEEL SHALL BE PAINTED W/ SYSTEM 6AZ, COAL TAR EPOXY WITH ZINC RICH PRIMER.

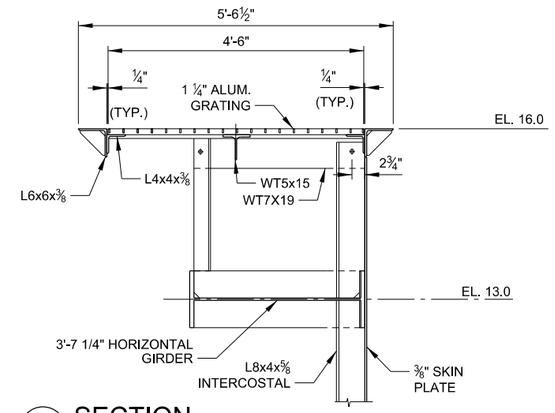

C4 SECTION

SCALE: ¾" = 1'-0"

0 1' 2' 3'

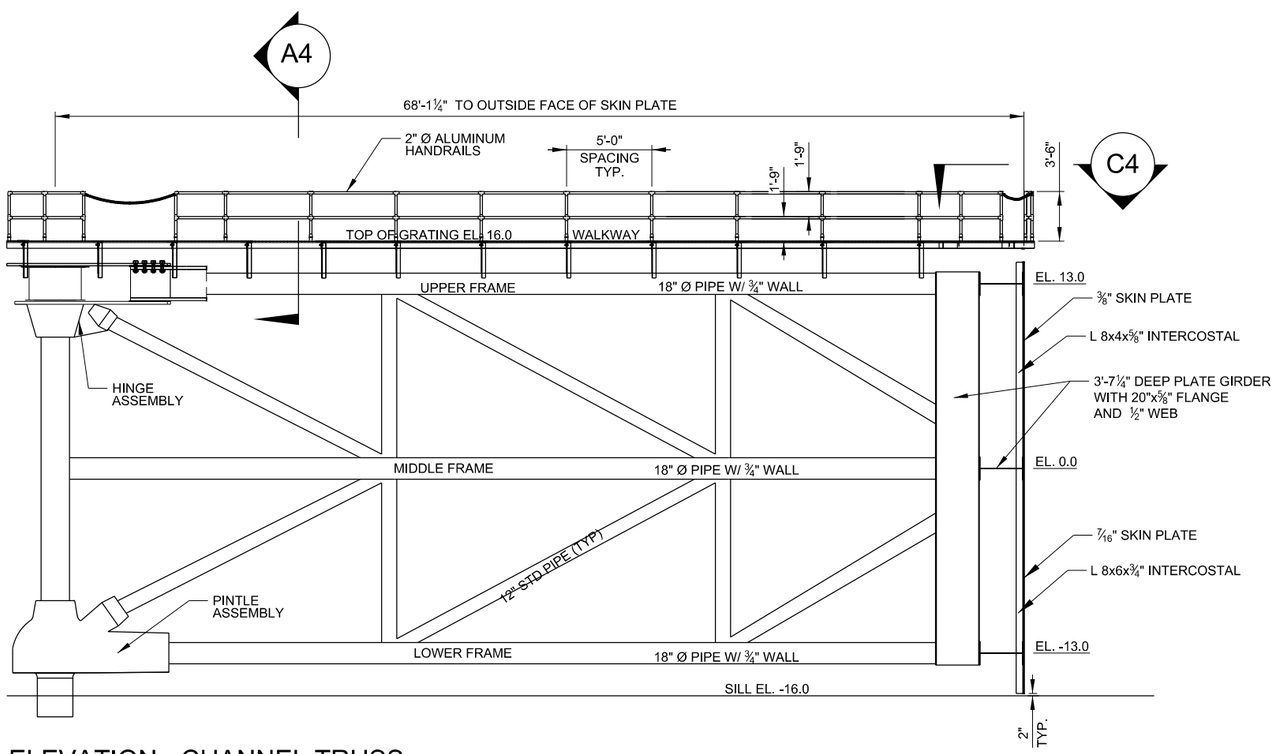

ELEVATION - CHANNEL TRUSS

SCALE: 3/16" = 1'-0"

0 4' 8' 16'

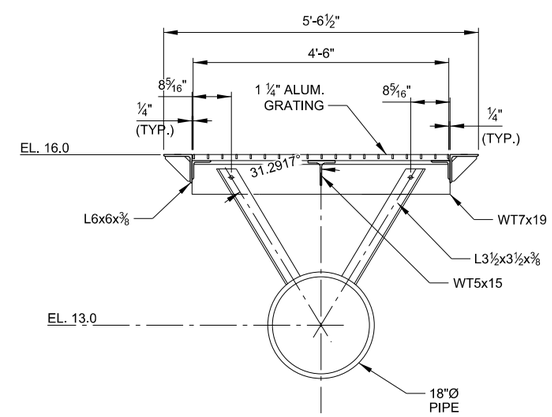

A4 SECTION

SCALE: ¾" = 1'-0"

0 1' 2' 3'

US Army Corps of Engineers®
GALVESTON DISTRICT

MARK	DESCRIPTION	DATE	APPR.	MARK	DESCRIPTION	DATE	APPR.

U.S. ARMY CORPS OF ENGINEERS
GALVESTON DISTRICT
GALVESTON, TEXAS

DESIGNED BY: J.R.;J.K.
DWN BY: D.S.;V.R.
CKD BY: D.L.;G.K.
SUBMITTED BY: D.LOVETT/G.KOTZENBERGER
DATE: DD-MON-YYYY
SOLICITATION NO.: N/A
CONTRACT NO.: N/A
PLOT SCALE: 1:1
PLOT DATE: YYYY-MM-DD-YYYY
FILE NUMBER: 1-####-####
SIZE: ANSI D
FILE NAME: S-201.dgn

TETRA TECH
400 112TH AVE NE
SUITE 300 BELIEVE, WA 98004

GULF INTRACOASTAL WATERWAY
BRAZOS RIVER FLOODGATES AND COLORADO RIVER LOCKS SYSTEMS, FEASIBILITY STUDY
ENGINEERING APPENDIX DRAWINGS

CHANNEL TRUSS

SHEET IDENTIFICATION
S-201

NOTE:

1.) ALL PIPE SECTION SHALL MEET THE REQUIREMENTS OF API 5L, GRADE X52

2.) ALL PLATE AND INTERCOSTALS SHALL MEET THE REQUIREMENTS OF ASTM A709, GRADE 50.

3.) ALL STEEL SHALL BE PAINTED W/ SYSTEM 6AZ, COAL TAR EPOXY WITH ZINC RICH PRIMER.

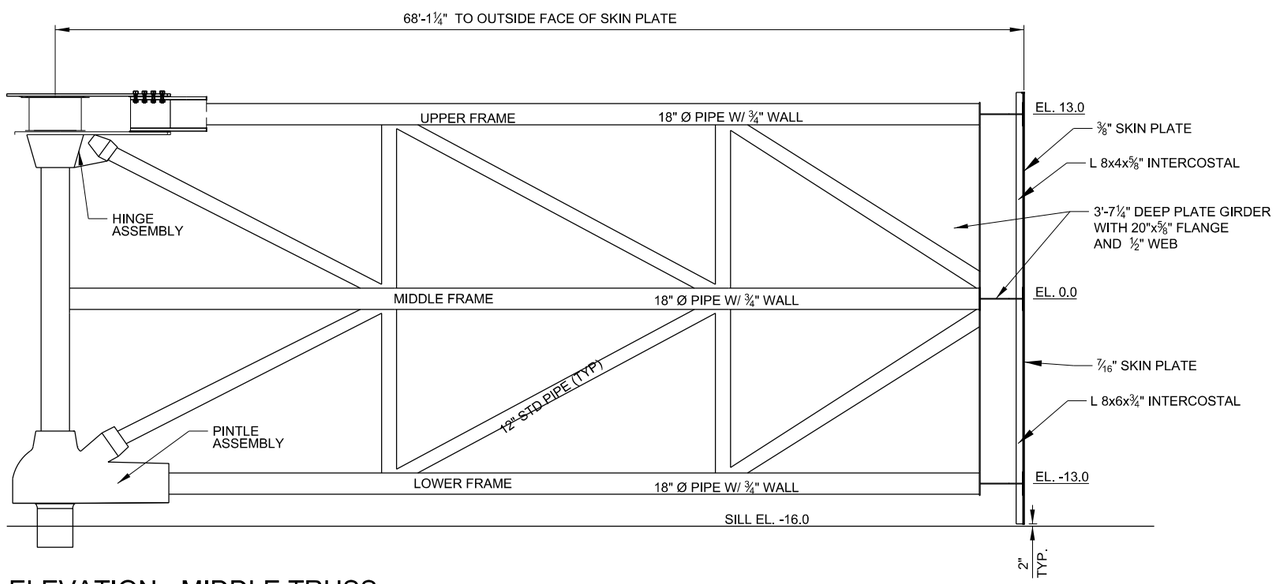

ELEVATION - MIDDLE TRUSS

SCALE: 3/16" = 1'-0"

0 4' 8' 16'

US Army Corps of Engineers®
GALVESTON DISTRICT

MARK	DESCRIPTION	DATE	APPR.

MARK	DESCRIPTION	DATE	APPR.

U.S. ARMY CORPS OF ENGINEERS
GALVESTON DISTRICT
GALVESTON, TEXAS

DESIGNED BY: J.R./J.K.
DATE: DD-MON-YYYY
DWN BY: D.S./ V.R.
CKD BY: D.L./G.K.
SOLICITATION NO.: N/A
SUBMITTED BY: D.LOVETT/G.KOTZENBERGER
CONTRACT NO.: N/A
PLOT SCALE: 1:1
PLOT DATE: YYYY/MM/DD
FILE NUMBER: H:\dwg\dwg\
SIZE: ANSI D
FILE NAME: S-202.dgn

TETRA TECH
400 112TH AVE NE
SUITE 300 BELLEVUE, WA 98004

GULF INTRACOASTAL WATERWAY
BRAZOS RIVER FLOODGATES AND COLORADO RIVER LOCKS SYSTEMS, FEASIBILITY STUDY
ENGINEERING APPENDIX DRAWINGS

MIDDLE TRUSS

SHEET IDENTIFICATION
S-202

NOTE:

1.) ALL PIPE SECTION SHALL MEET THE REQUIREMENTS OF API 5L, GRADE X52

2.) ALL PLATE AND INTERCOSTALS SHALL MEET THE REQUIREMENTS OF ASTM A709, GRADE 50.

3.) ALL STEEL SHALL BE PAINTED W/ SYSTEM 6AZ, COAL TAR EPOXY WITH ZINC RICH PRIMER.

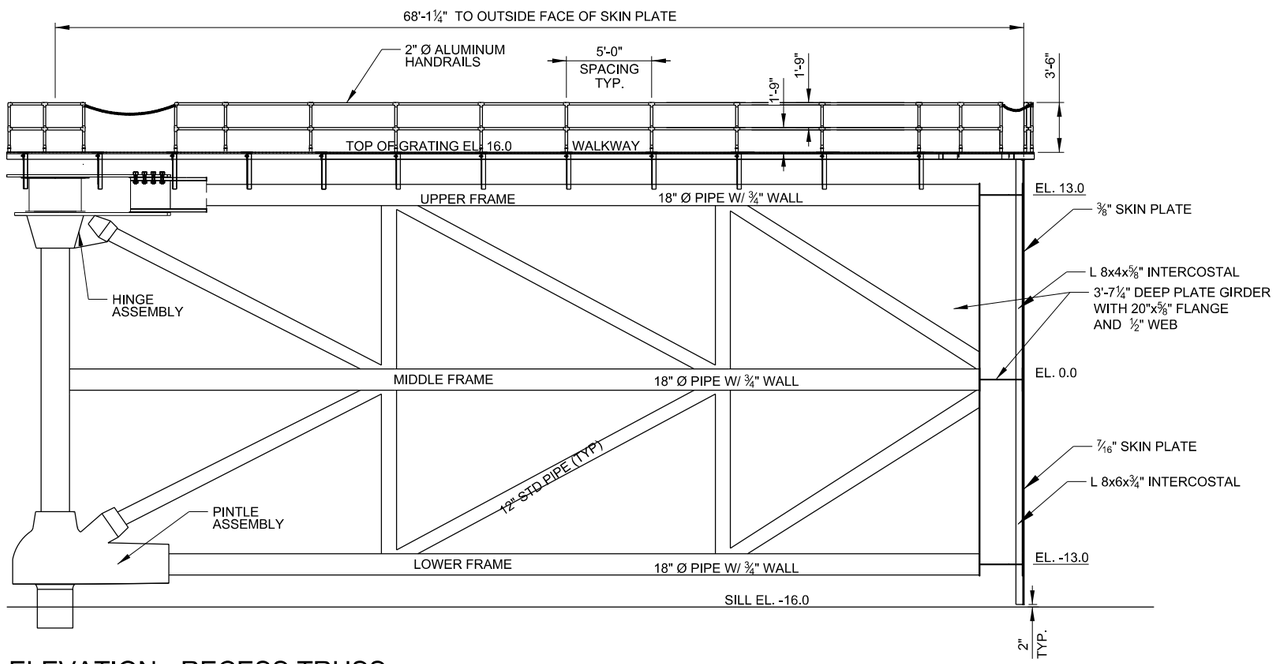

ELEVATION - RECESS TRUSS

SCALE: 3/16" = 1'-0"

0 4' 8' 16'

US Army Corps of Engineers®
GALVESTON DISTRICT

MARK	DESCRIPTION	DATE	APPR.

MARK	DESCRIPTION	DATE	APPR.

U.S. ARMY CORPS OF ENGINEERS
GALVESTON DISTRICT
GALVESTON, TEXAS

DESIGNED BY: J.R.;J.K.
DWN BY: D.S.J.;V.R.
CKD BY: D.L.;G.K.
SUBMITTED BY: D.LOVETT;G.KOTZENBERGER
PLOT SCALE: 1:1
PLOT DATE: YYYY/MM/DD
SIZE: ANSI D
FILE NAME: S-203.dgn
DATE: DD-MON-YYYY
SOLICITATION NO.: N/A
CONTRACT NO.: N/A
FILE NUMBER: HAM-xxxxx

TETRA TECH
400 112TH AVE NE
SUITE 300 BELIEVE, WA 98004

GULF INTRACOASTAL WATERWAY
BRAZOS RIVER FLOODGATES AND COLORADO RIVER LOCKS SYSTEMS, FEASIBILITY STUDY
ENGINEERING APPENDIX DRAWINGS

RECESS TRUSS

SHEET IDENTIFICATION
S-203

NOTES:

1. BUILDING SHALL BE 6,000 SF WITH CMU WALLS AND PRE-ENGINEERED STANDING SEAM ROOF.

2. BUILDING SHALL INCLUDE 5, 10'x10' ENCLOSED OFFICES, 20'x20' CONFERENCE ROOM, 10'x20' BREAK ROOM, AND A MINIMUM OF 2 RESTROOMS.

3. 1500SF OF BUILDING SHALL BE UNFINISHED STORAGE.

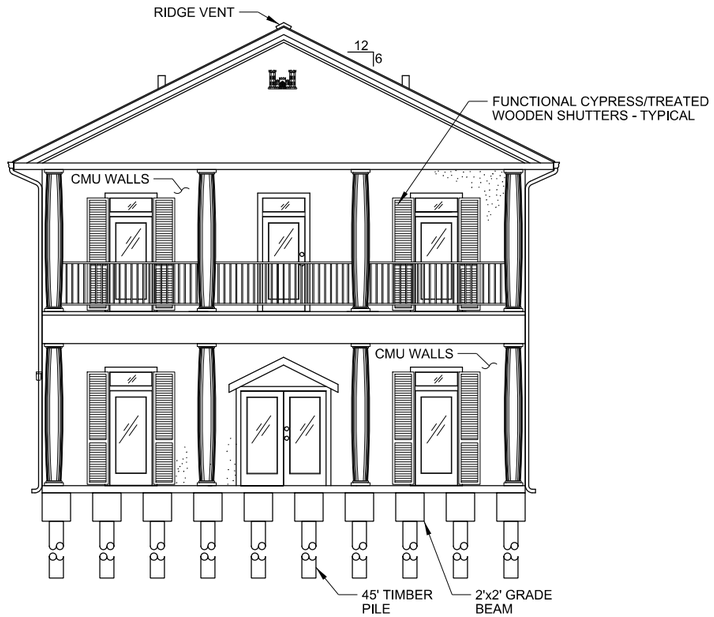

FRONT ELEVATION

SCALE: 3/16" = 1'-0"

0 4' 8' 16'

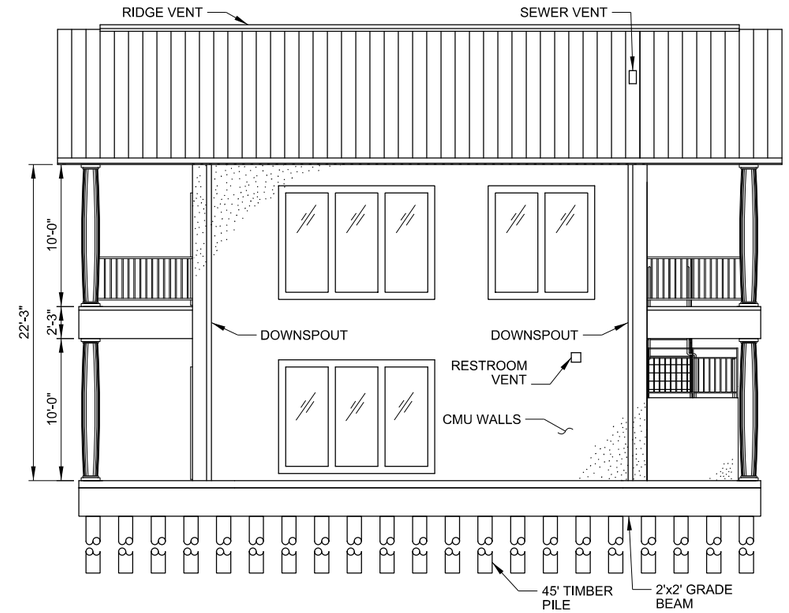

SIDE ELEVATION

SCALE: 3/16" = 1'-0"

0 4' 8' 16'

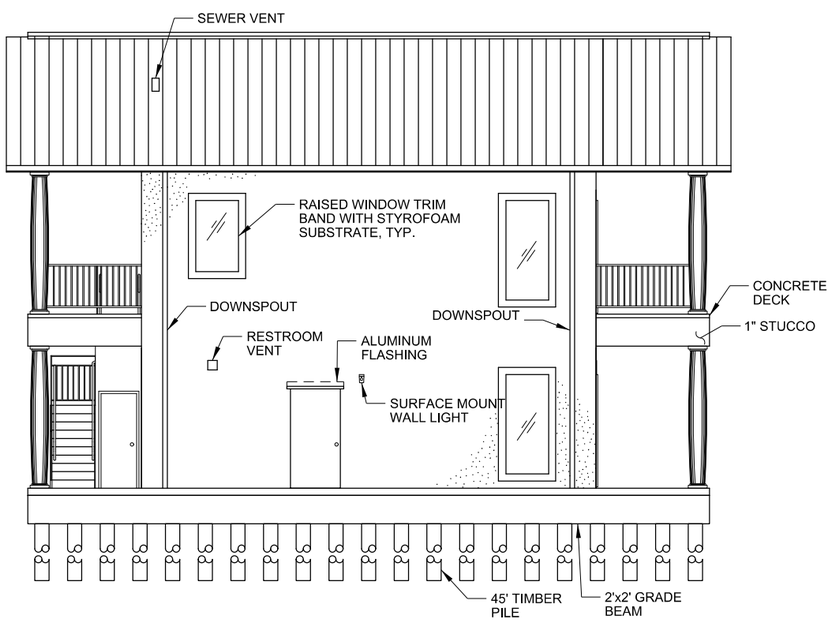

SIDE ELEVATION

SCALE: 3/16" = 1'-0"

0 4' 8' 16'

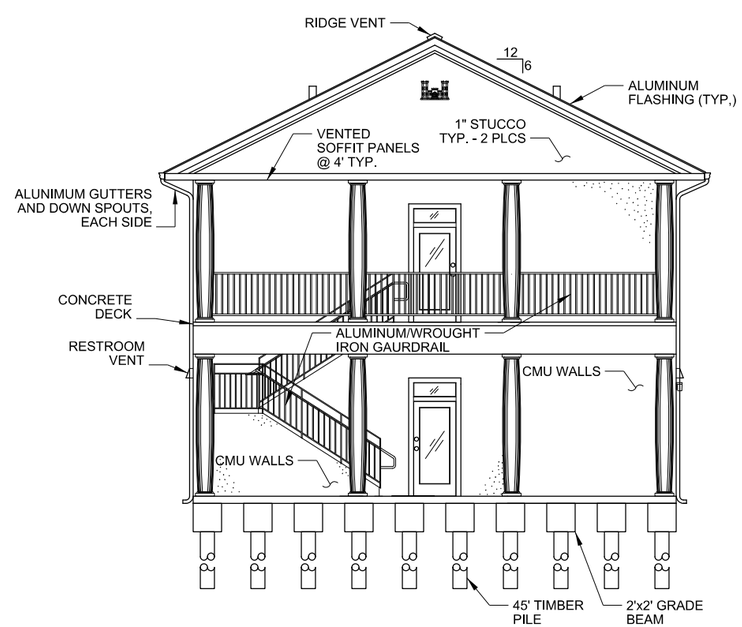

BACK ELEVATION

SCALE: 3/16" = 1'-0"

0 4' 8' 16'

US Army Corps of Engineers
GALVESTON DISTRICT

MARK	DESCRIPTION	DATE	APPR.	MARK	DESCRIPTION	DATE	APPR.

U.S. ARMY CORPS OF ENGINEERS
GALVESTON DISTRICT
GALVESTON, TEXAS

DESIGNED BY: LR/JJK
DWN BY: DJL/VR
CKD BY: DLL/GJK
SUBMITTED BY: D LOVETTIG KOTZENBERGER
PLOT SCALE: 1:1
PLOT DATE: MM/DD/YYYY
SIZE: ANSI D
FILE NAME: S-204.dgn
DATE: DD-MON-YYYY
SOLICITATION NO.: N/A
CONTRACT NO.: N/A
FILE NUMBER: H:\dist\ut\dwg\

TETRA TECH
400 112TH AVE NE
SUITE 300 BELLEVUE, WA 98004

GULF INTRACOASTAL WATERWAY
BRAZOS RIVER FLOODGATES AND COLORADO RIVER LOCKS SYSTEMS, FEASIBILITY STUDY
ENGINEERING APPENDIX DRAWINGS

ADMINISTRATION BUILDING

SHEET IDENTIFICATION
S-204

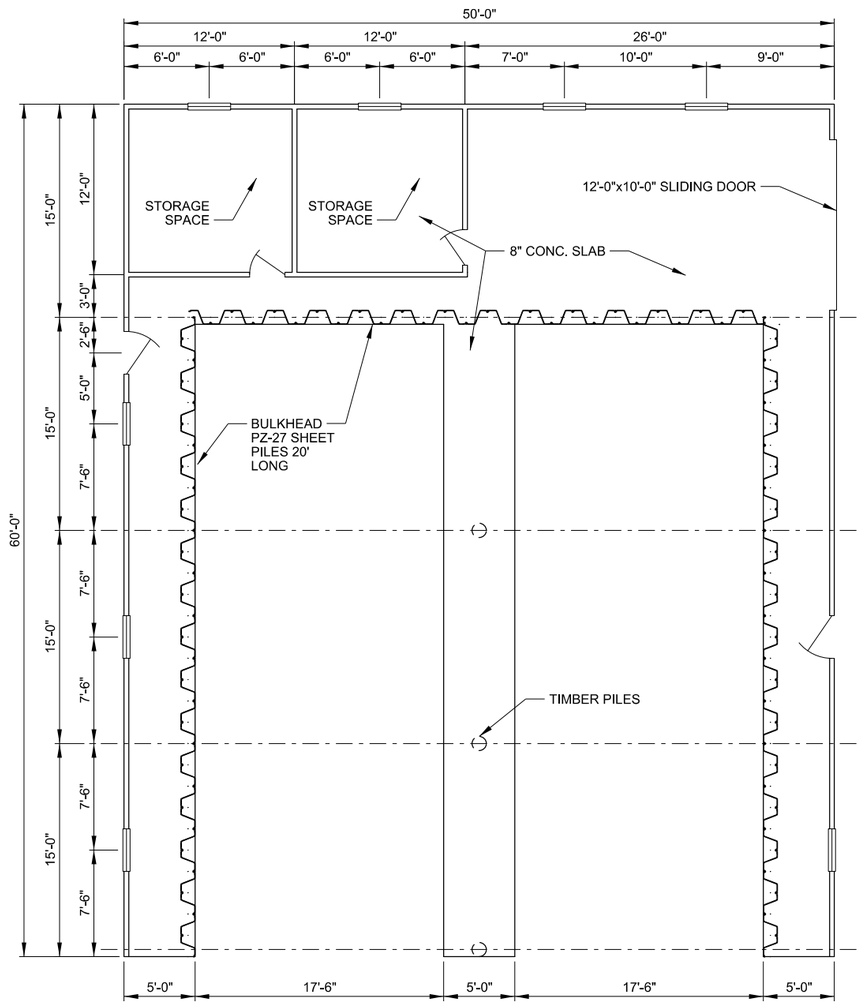

FLOOR PLAN

SCALE: 3/16" = 1'-0"

0 4' 8' 16'

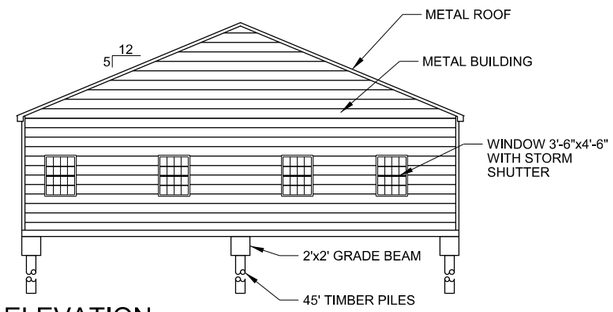

ELEVATION

SCALE: 1/8" = 1'-0"

0 4' 8' 16'

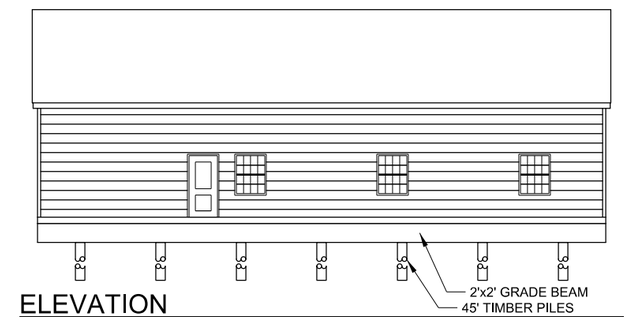

ELEVATION

SCALE: 1/8" = 1'-0"

0 4' 8' 16'

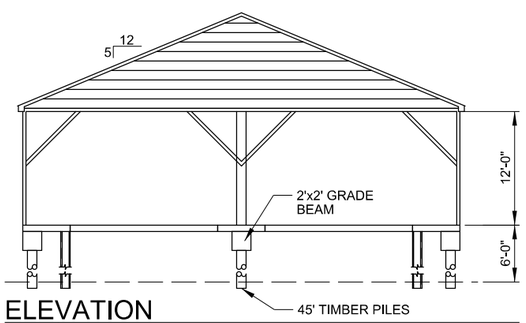

ELEVATION

SCALE: 1/8" = 1'-0"

0 4' 8' 16'

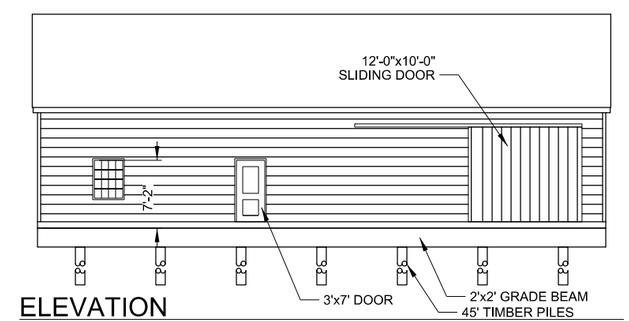

ELEVATION

SCALE: 1/8" = 1'-0"

0 4' 8' 16'

US Army Corps of Engineers
GALVESTON DISTRICT

MARK	DESCRIPTION	DATE	APPR.	MARK	DESCRIPTION	DATE	APPR.

U.S. ARMY CORPS OF ENGINEERS
GALVESTON DISTRICT
GALVESTON, TEXAS

DESIGNED BY: J.R./J.K.
DWN BY: D.S./ V.R.
CKD BY: D.L./G.K.
SUBMITTED BY: D.LOVETT/G.KOTZENBERGER
DATE: DD-MON-YYYY
SOLICITATION NO.: N/A
CONTRACT NO.: N/A
PLOT SCALE: 1:1
PLOT DATE: YYYY/MM/DD
FILE NUMBER: 1-4-8-8-8-8-8
SIZE: ANSI D
FILE NAME: S-205.dgn

TETRA TECH
400 112TH AVE NE
SUITE 300 BELLEVUE, WA 98004

GULF INTRACOASTAL WATERWAY
BRAZOS RIVER FLOODGATES AND COLORADO RIVER LOCKS SYSTEMS, FEASIBILITY STUDY
ENGINEERING APPENDIX DRAWINGS

BOAT HOUSE

SHEET IDENTIFICATION
S-205

ROOF PLAN

1. BUILDING INTERIOR TO BE UNFINISHED

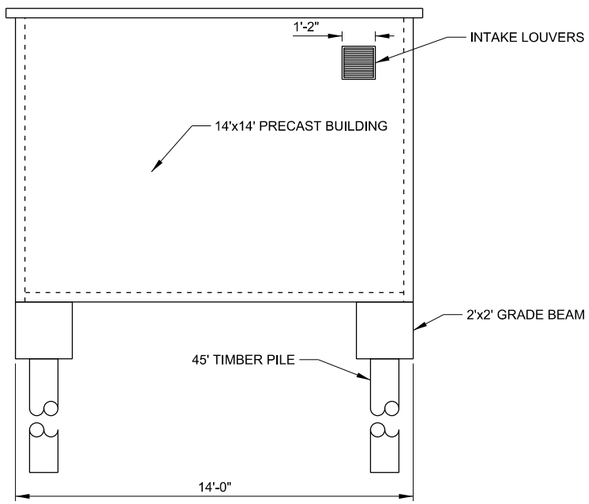

RIGHT SIDE ELEVATION

SCALE: N.T.S.

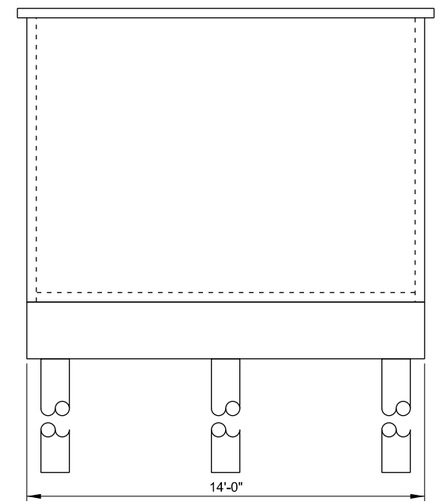

REAR ELEVATION

SCALE: N.T.S.

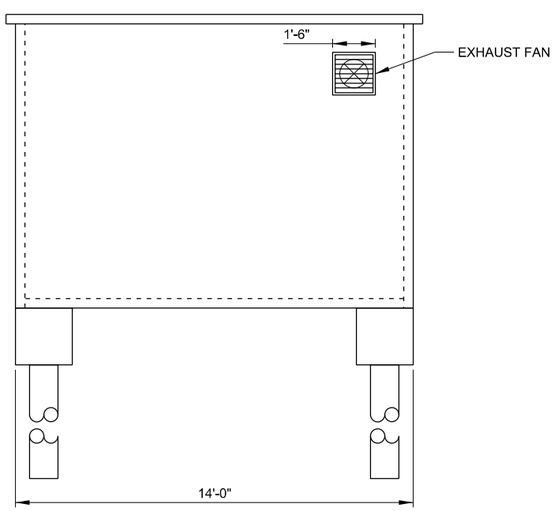

LEFT SIDE ELEVATION

SCALE: N.T.S.

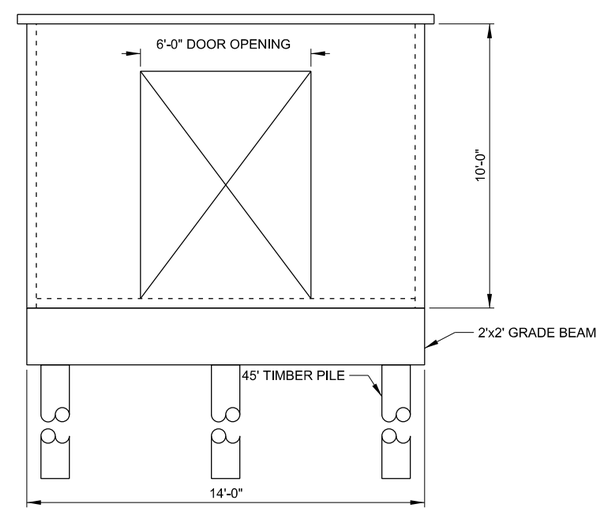

FRONT END ELEVATION

SCALE: N.T.S.

US Army Corps of Engineers®
GALVESTON DISTRICT

MARK	DESCRIPTION	DATE	APPR.

MARK	DESCRIPTION	DATE	APPR.

U.S. ARMY CORPS OF ENGINEERS
GALVESTON DISTRICT
GALVESTON, TEXAS

DESIGNED BY: J.R.;J.K.
DWN BY: D.S.;V.R.
CKD BY: D.L.;G.K.
SUBMITTED BY: D.LORETTO KOTZENBERGER
DATE: DD-MON-YYYY
SOLICITATION NO.: N/A
CONTRACT NO.: N/A
PLOT SCALE: 1:1
PLOT DATE: MM/DD/YYYY
FILE NUMBER: Filed separate
SIZE: ANSI D
FILE NAME: S-206.dgn

TETRA TECH
400 112TH AVE NE
SUITE 300 BELIEVE, WA 98004

GULF INTRACOASTAL WATERWAY
BRAZOS RIVER FLOODGATES AND COLORADO RIVER LOCKS SYSTEMS, FEASIBILITY STUDY
ENGINEERING APPENDIX DRAWINGS

GENERATOR HOUSE

SHEET IDENTIFICATION
S-206

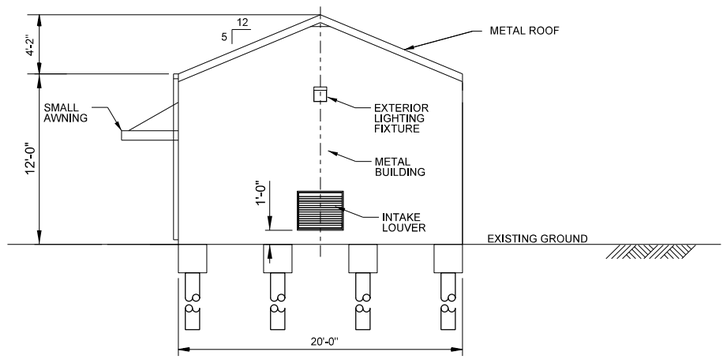

NORTH ELEVATION

SCALE: 3/16" = 1'-0"

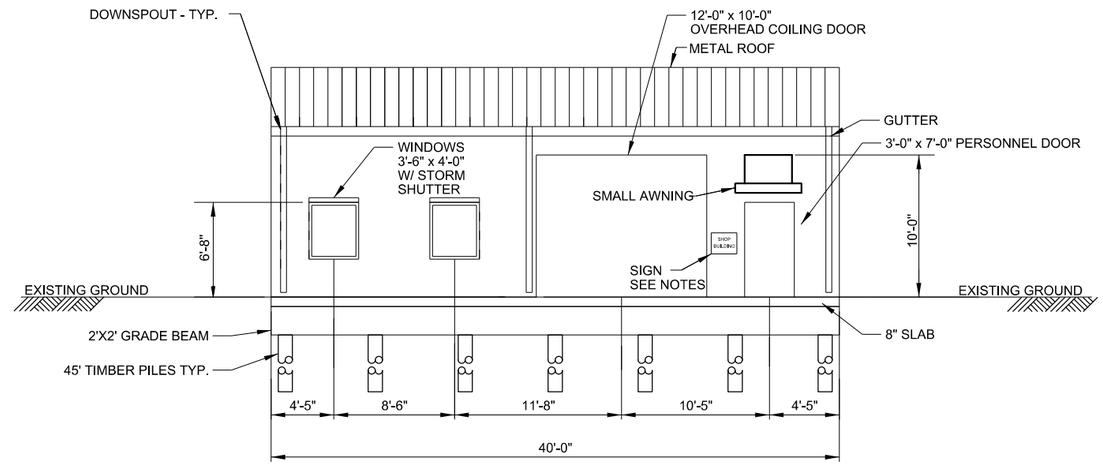

EAST ELEVATION

SCALE: 3/16" = 5'-0"

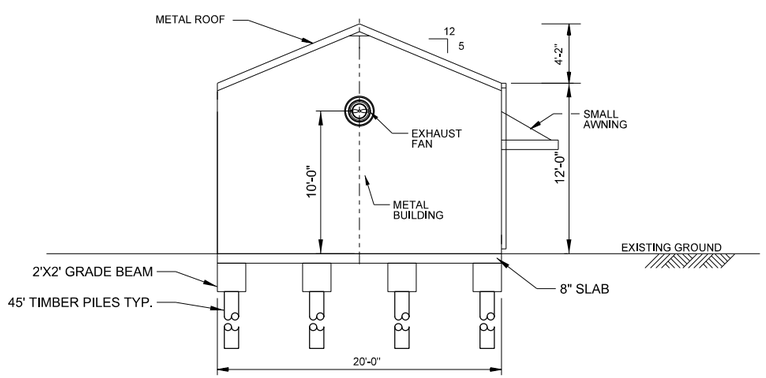

SOUTH ELEVATION

SCALE: 3/16" = 1'-0"

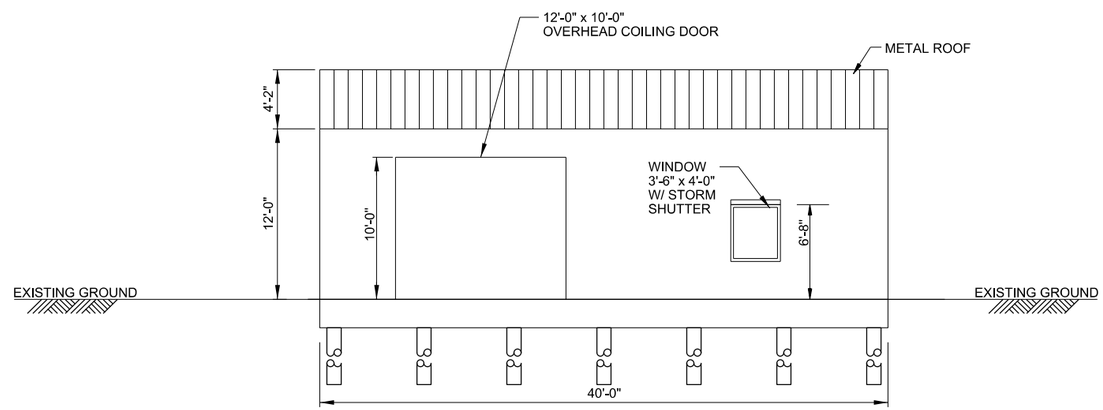

WEST ELEVATION

SCALE: 3/16" = 5'-0"

US Army Corps of Engineers
GALVESTON DISTRICT

MARK	DESCRIPTION	DATE	APPR.	MARK	DESCRIPTION	DATE	APPR.

U.S. ARMY CORPS OF ENGINEERS
GALVESTON DISTRICT
GALVESTON, TEXAS

TETRA TECH
400 112TH AVE NE
SUITE 300 BELIEVE, WA 98004

DESIGNED BY: J.R.;J.K.
DWN BY: D.S.J.;V.R.
CKD BY: D.L.;G.K.
SUBMITTED BY: D.LOVETT;G.KOTZENBERGER
PLOT SCALE: 1:1
PLOT DATE: YYYY/MM/DD
SIZE: ANSI D
FILE NAME: S-207.dgn
DATE: DD-MON-YYYY
SOLICITATION NO.: N/A
CONTRACT NO.: N/A
FILE NUMBER: H:\dist\dist\

GULF INTRACOASTAL WATERWAY
BRAZOS RIVER FLOODGATES AND COLORADO RIVER LOCKS SYSTEMS, FEASIBILITY STUDY
ENGINEERING APPENDIX DRAWINGS

WAREHOUSE

SHEET IDENTIFICATION
S-207

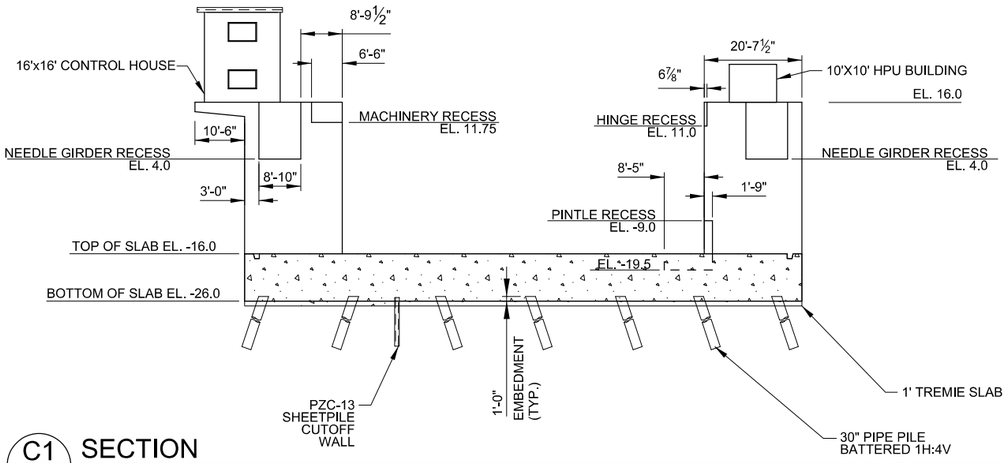

C1 SECTION
S-101

SCALE: 1/16"=1'-0"

0 8' 16' 32'

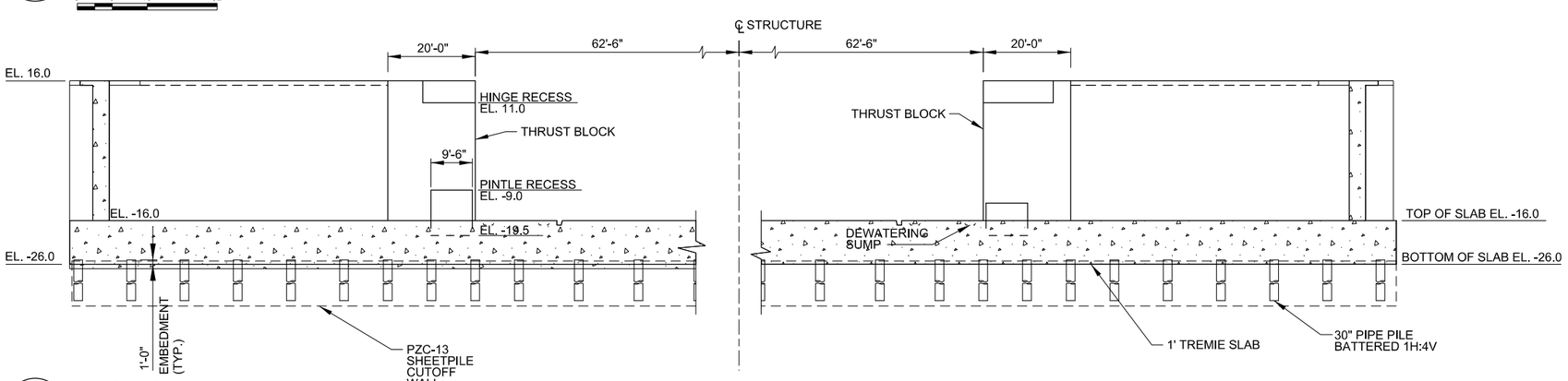

B1 SECTION
S-101

SCALE: 1/16"=1'-0"

0 8' 16' 32'

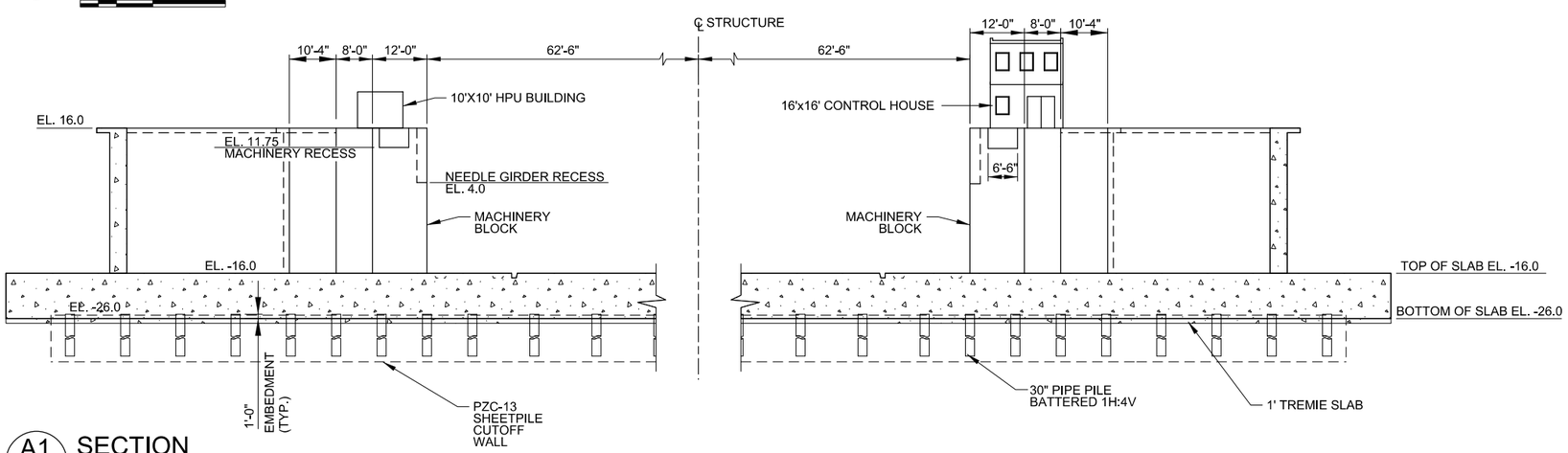

A1 SECTION
S-101

SCALE: 1/16"=1'-0"

0 8' 16' 32'

US Army Corps of Engineers
GALVESTON DISTRICT

MARK	DESCRIPTION	DATE	APPR.

MARK	DESCRIPTION	DATE	APPR.

U.S. ARMY CORPS OF ENGINEERS
GALVESTON DISTRICT
GALVESTON, TEXAS

TETRA TECH
400 112TH AVE NE
SUITE 300 BELLEVUE, WA 98004

DESIGNED BY: J.R.;J.K.	DATE: DD-MMM-YYYY
DWN BY: D.S.;V.R.	CKD BY: D.L.;G.K.
SOLICITATION NO.: N/A	
SUBMITTED BY: D.LOVETTE;K.KOTZENBERGER	CONTRACT NO.: N/A
PLOT SCALE: 1:1	PLOT DATE: MMM-DD-YYYY
FILE NUMBER: *Field assigned*	
SIZE: ANSI D	FILE NAME: S-301.dgn

GULF INTRACOASTAL WATERWAY
BRAZOS RIVER FLOODGATES AND COLORADO RIVER LOCKS SYSTEMS, FEASIBILITY STUDY
ENGINEERING APPENDIX DRAWINGS

MASONRY SECTIONS

SHEET IDENTIFICATION
S-301

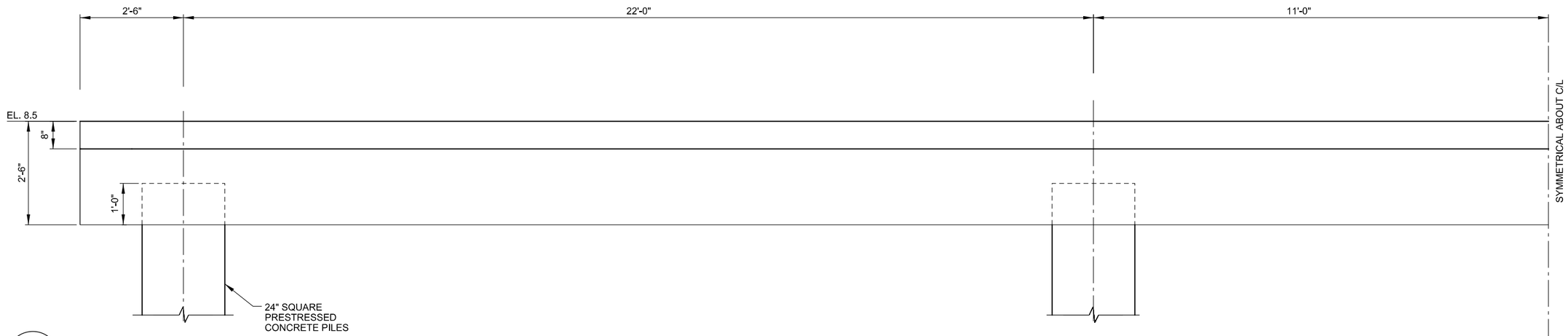

C1 S-107 **SECTION**

SCALE: 3/4"=1'-0"

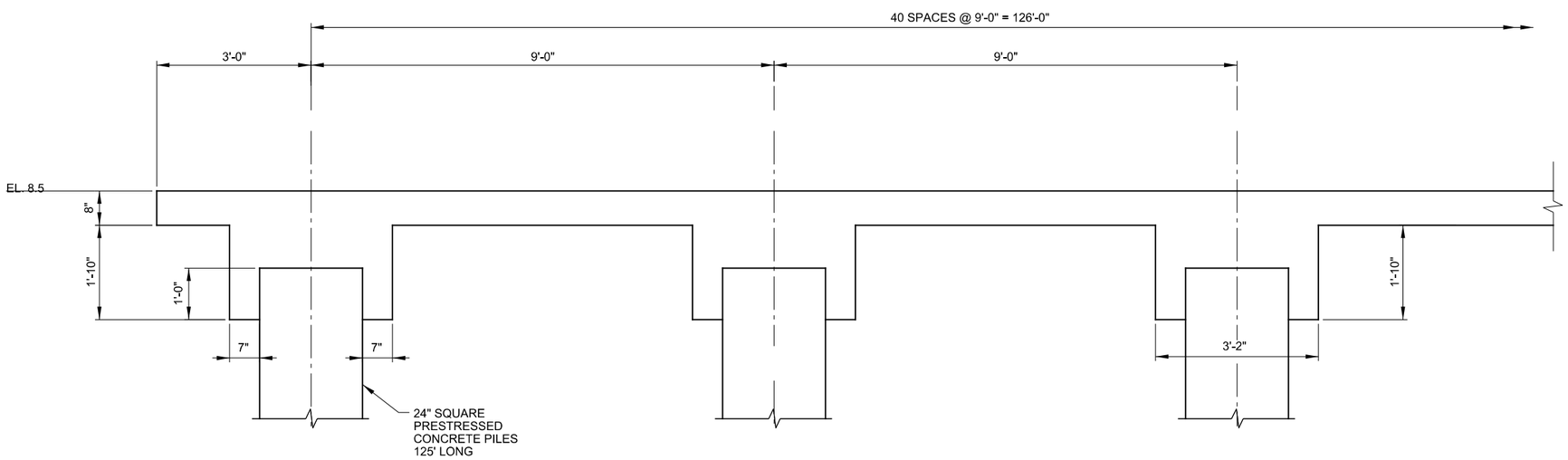

A1 S-107 **SECTION**

SCALE: 3/4"=1'-0"

US Army Corps of Engineers®
GALVESTON DISTRICT

MARK	DESCRIPTION	DATE	APPR.

MARK	DESCRIPTION	DATE	APPR.

U.S. ARMY CORPS OF ENGINEERS
GALVESTON DISTRICT
GALVESTON, TEXAS

DESIGNED BY: J.R.;U.K.
DWN BY: D.S.;V.R.
CKD BY: D.L.;G.K.
SUBMITTED BY: D.LOVETT/G.KOTZENBERGER
PLOT SCALE: 1:1
PLOT DATE: YYYY-MM-DD
SIZE: ANSI D
FILE NAME: S-302.dgn
DATE: DD-MON-YYYY
SOLICITATION NO.: N/A
CONTRACT NO.: N/A
FILE NUMBER: H:\dwg\dwg\

TETRA TECH
400 112TH AVE NE
SUITE 300 BELIEVE, WA 98004

GULF INTRACOASTAL WATERWAY
BRAZOS RIVER FLOODGATES AND COLORADO RIVER LOCKS SYSTEMS, FEASIBILITY STUDY
ENGINEERING APPENDIX DRAWINGS

NEEDLE GIRDER STORAGE PLATFORM SECTIONS

SHEET IDENTIFICATION
S-302

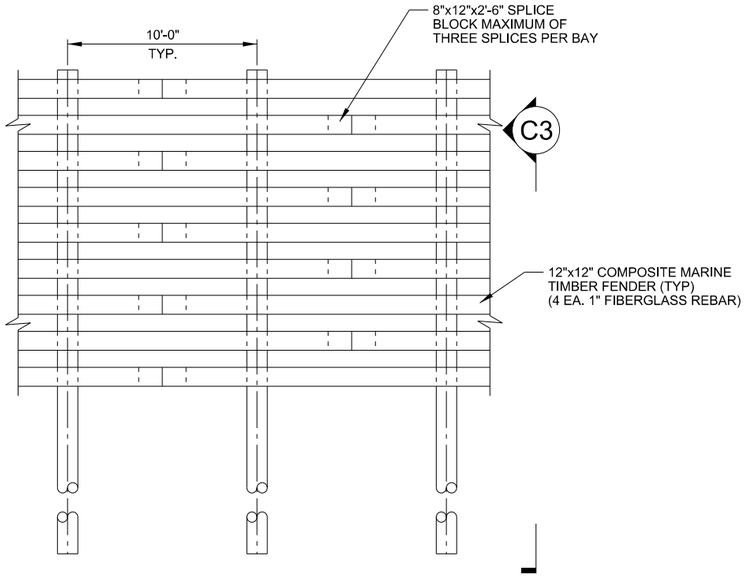

TYPICAL GUIDEWALL ELEVATION

SCALE: ¼" = 1'-0"

0 2' 4' 8'

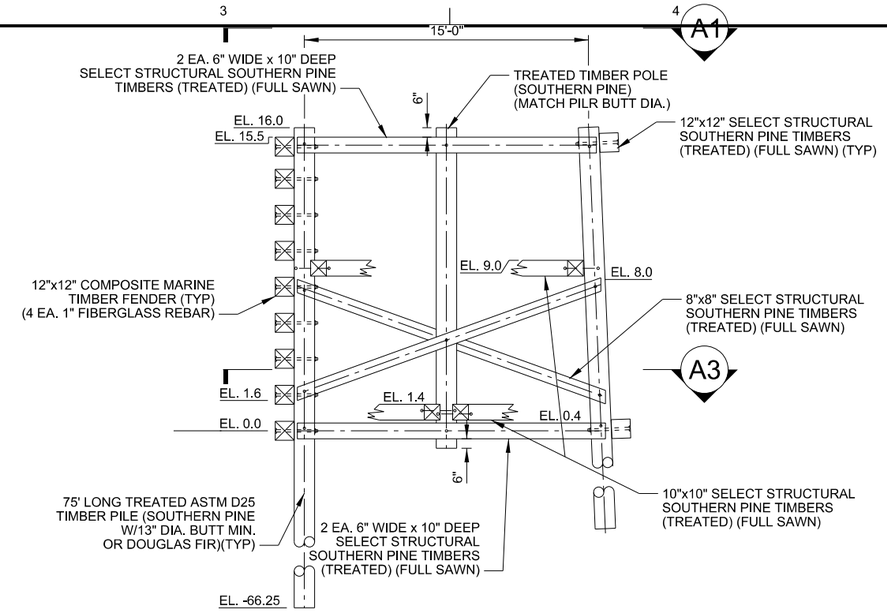

C3 SECTION

SCALE: ¼" = 1'-0"

0 2' 4' 8'

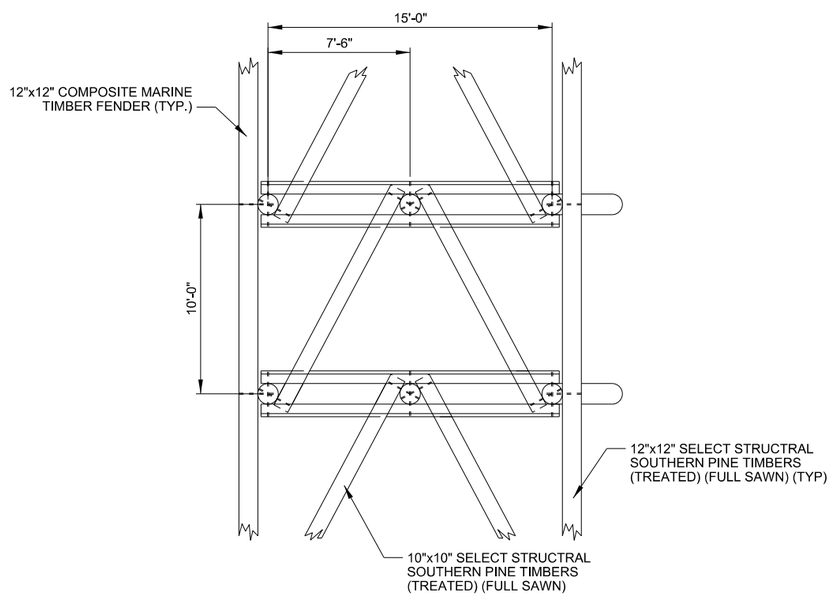

A1 SECTION

SCALE: ¼" = 1'-0"

0 2' 4' 8'

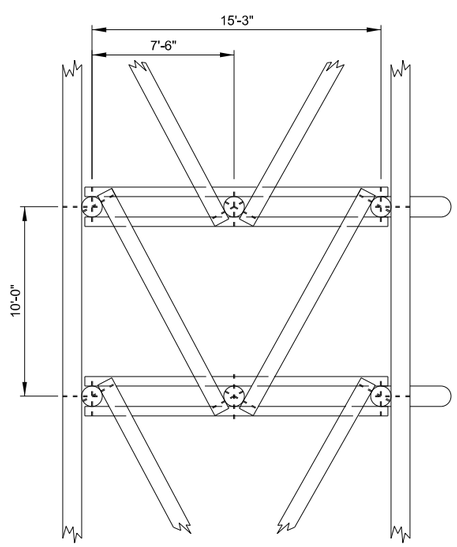

A3 SECTION

SCALE: ¼" = 1'-0"

0 2' 4' 8'

US Army Corps of Engineers
GALVESTON DISTRICT

MARK	DESCRIPTION	DATE	APPR.	MARK	DESCRIPTION	DATE	APPR.

U.S. ARMY CORPS OF ENGINEERS
GALVESTON DISTRICT
GALVESTON, TEXAS

DESIGNED BY: JR;JJK;
DWN BY: DJ;VR;
CKD BY: DL;GJL;
SUBMITTED BY: D LOVETT/G KOTZENBERGER
PLOT SCALE: 1:1
PLOT DATE: YYYY/MM/DD
DATE: DD-MON-YYYY
SOLICITATION NO.: N/A
CONTRACT NO.: N/A
FILE NUMBER: Header/footer
SIZE: ANSI D
FILE NAME: S-303.dgn

TETRA TECH
400 112TH AVE NE
SUITE 300 BELIEVE, WA 98004

GULF INTRACOASTAL WATERWAY
BRAZOS RIVER FLOODGATES AND COLORADO
RIVER LOCKS SYSTEMS, FEASIBILITY STUDY
ENGINEERING APPENDIX DRAWINGS

GUIDEWALL SECTION

SHEET IDENTIFICATION
S-303

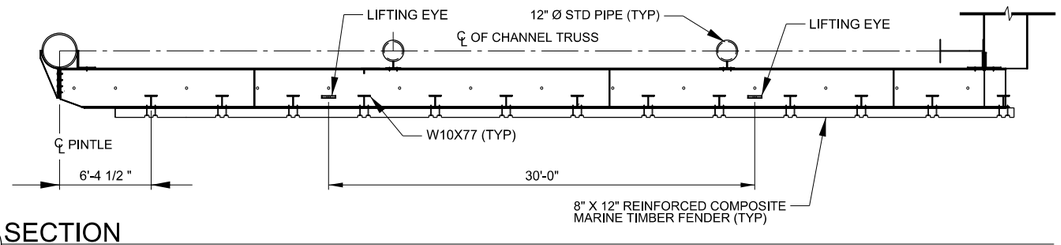

D1 SECTION

SCALE: 3/16" = 1'-0"

0 4' 8' 16'

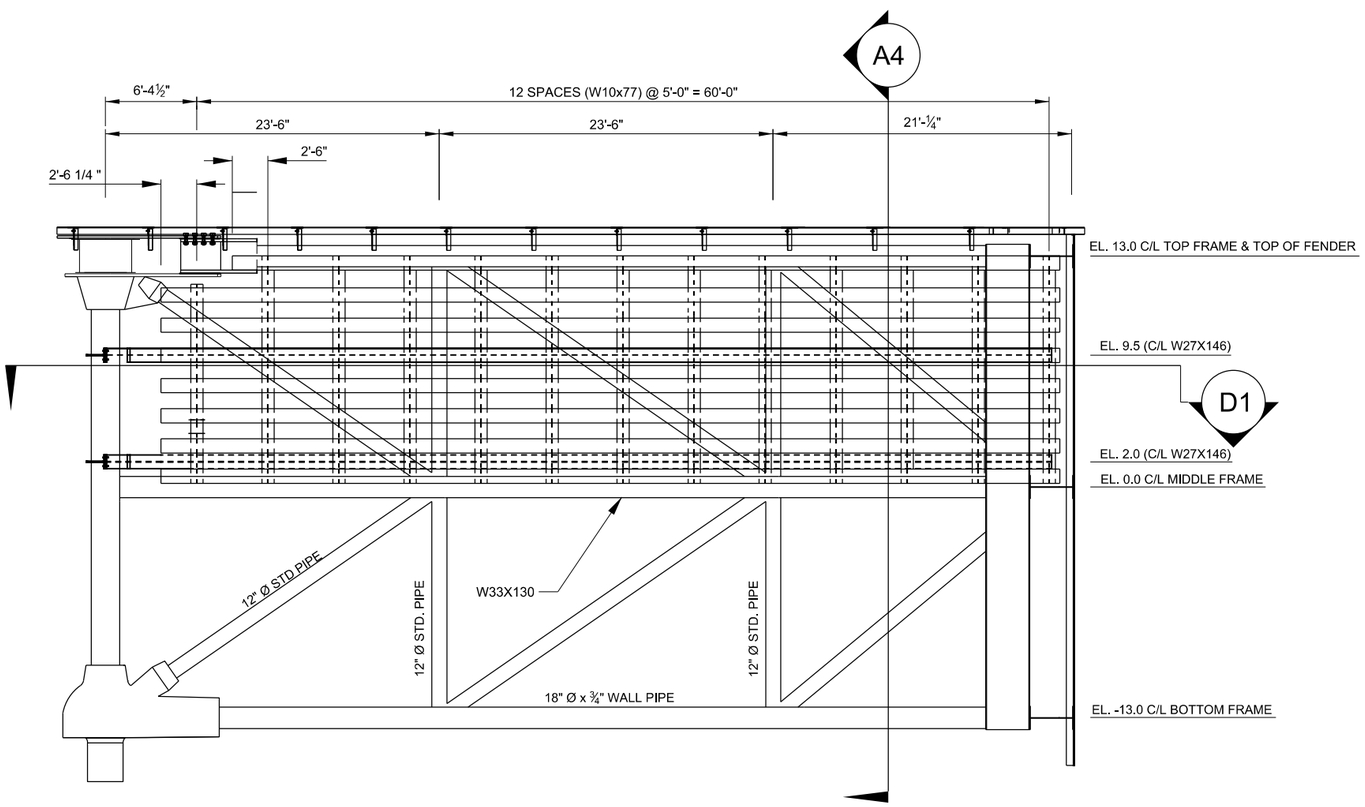

GATE FENDER ELEVATION

SCALE: 3/16" = 1'-0"

0 4' 8' 16'

NOTE: WALKWAY NOT SHOWN FOR CLARITY.

A4 SECTION

SCALE: 3/16" = 1'-0"

0 4' 8' 16'

US Army Corps of Engineers®
GALVESTON DISTRICT

MARK	DESCRIPTION	DATE	APPR.

MARK	DESCRIPTION	DATE	APPR.

U.S. ARMY CORPS OF ENGINEERS
GALVESTON DISTRICT
GALVESTON, TEXAS

DESIGNED BY: JR/JK
DATE: DD-MON-YYYY
DWN BY: DJ/JV/R
CKD BY: DL/GK
SOLICITATION NO.: N/A
SUBMITTED BY: D.LOVETTIG KOTZENBERGER
CONTRACT NO.: N/A
PLOT SCALE: 1:1
PLOT DATE: DD-MMM-YYYY
FILE NUMBER: 14444444
SIZE: ANSI D
FILE NAME: S-401.dgn

TETRA TECH
400 112TH AVE NE
SUITE 300 BELLEVUE, WA 98004

GULF INTRACOASTAL WATERWAY
BRAZOS RIVER FLOODGATES AND COLORADO RIVER LOCKS SYSTEMS, FEASIBILITY STUDY
ENGINEERING APPENDIX DRAWINGS

FENDER

SHEET IDENTIFICATION
S-401

NOTES

1. ALL PLATES AND SHAPES SHALL MEET THE REQUIREMENTS OF ASTM A709, GRADE 50

2. ALL NEEDLE GIRDER COMPONENTS SHALL BE PAINTED WITH SYSTEM 6AZ COAL TAR EPOXY W/ ZINC RICH PRIMER.

3. ONE SET OF NEEDLES AND GIRDERS TO BE USED FOR BRAZOS AND COLORADO RIVER STRUCTURES.

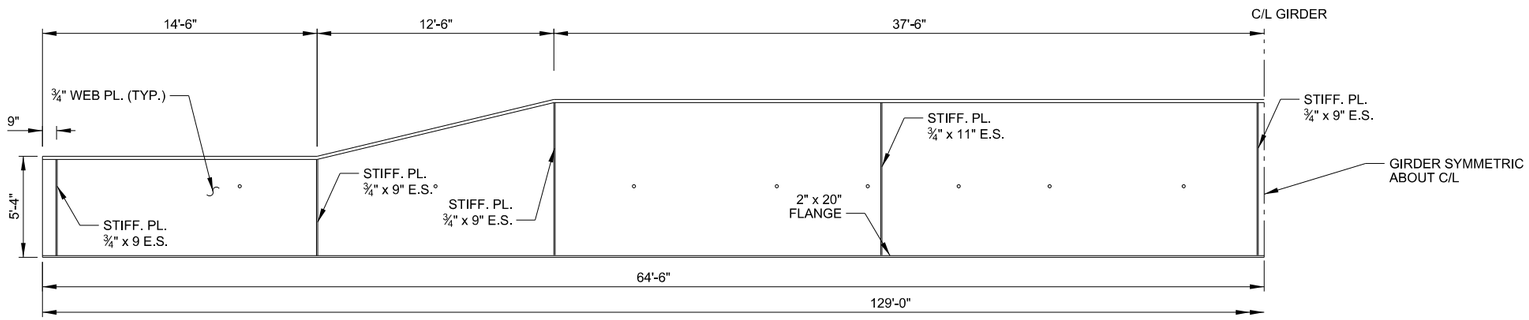

PLAN - NEEDLE GIRDER

SCALE: ¼" = 1'-0"

0 2' 4' 8'

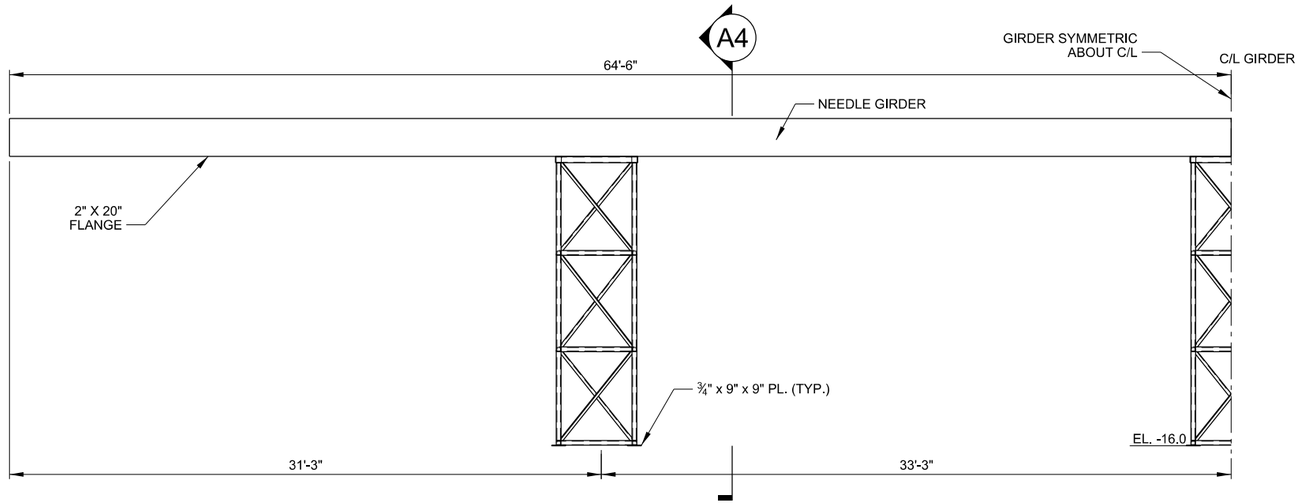

ELEVATION - NEEDLE GIRDER

SCALE: ¼" = 1'-0"

0 2' 4' 8'

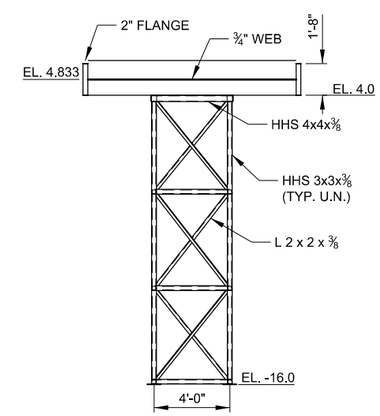

A4 SECTION

SCALE: ¼" = 1'-0"

0 2' 4' 8'

US Army Corps of Engineers®
GALVESTON DISTRICT

MARK	DESCRIPTION	DATE	APPR.

MARK	DESCRIPTION	DATE	APPR.

U.S. ARMY CORPS OF ENGINEERS
GALVESTON DISTRICT
GALVESTON, TEXAS

DESIGNED BY: J.R./J.K.
DWN BY: D.S./ V.R.
CKD BY: D.L./G.K.
SUBMITTED BY: D.LORETTO/ K.OTZENBERGER
DATE: DD-MON-YYYY
SOLICITATION NO.: N/A
CONTRACT NO.: N/A
FILE NUMBER: Hide! sheet
PLOT SCALE: 1:1
PLOT DATE: MM/DD/YYYY
SIZE: ANSI D
FILE NAME: S-402.dgn

TETRA TECH
400 112TH AVE NE
SUITE 300 BELIEVE, WA 98004

GULF INTRACOASTAL WATERWAY
BRAZOS RIVER FLOODGATES AND COLORADO RIVER LOCKS SYSTEMS, FEASIBILITY STUDY
ENGINEERING APPENDIX DRAWINGS

NEEDLE GIRDER & SUPPORT TOWERS

SHEET IDENTIFICATION
S-402

NOTES

1. ALL PLATES AND SHAPES SHALL MEET THE REQUIREMENTS OF ASTM A709, GRADE 50

2. ALL NEEDLE GIRDER COMPONENTS SHALL BE PAINTED WITH SYSTEM 6AZ COAL TAR EPOXY W/ ZINC RICH PRIMER.

3. ONE SET OF NEEDLES AND GIRDERS TO BE USED FOR BRAZOS AND COLORADO RIVER STRUCTURES.

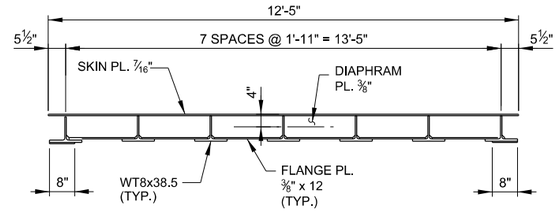

PLAN

SCALE: ½"=1'-0"

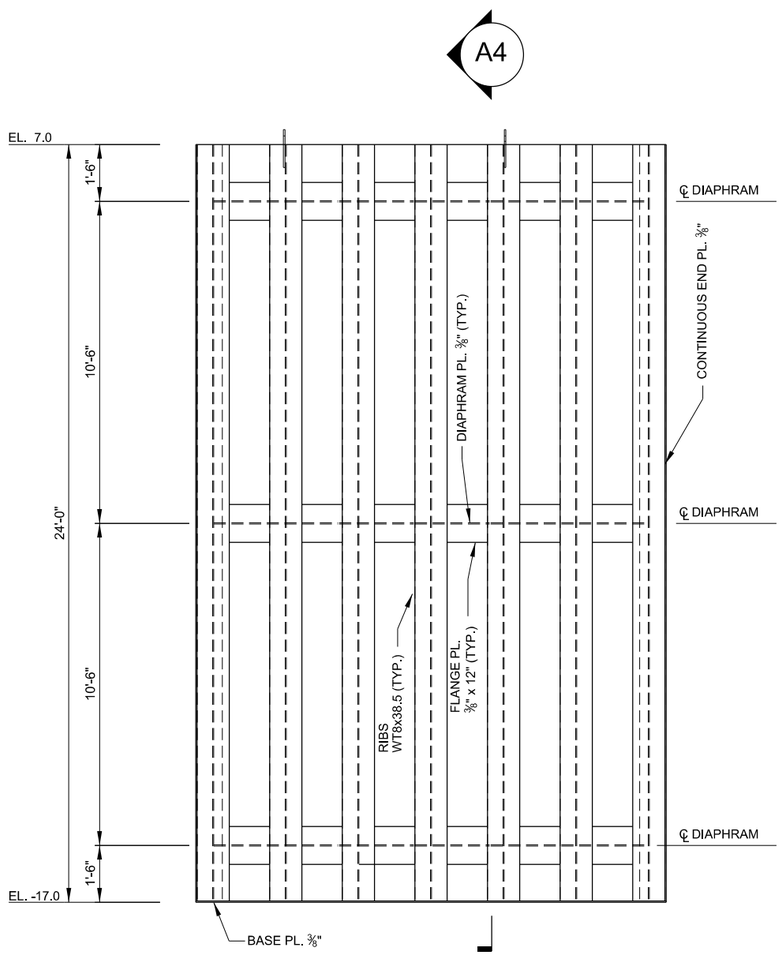

STEEL NEEDLE ELEVATION (20 REQ'D)

SCALE: ½"=1'-0"

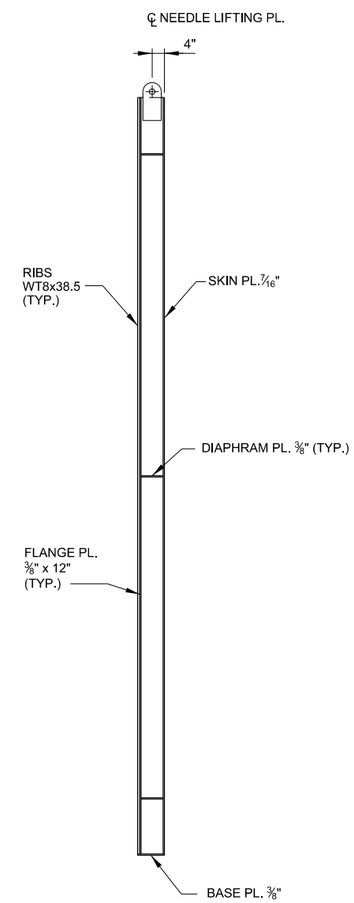

A4 SECTION

SCALE: ½"=1'-0"

US Army Corps of Engineers
GALVESTON DISTRICT

MARK	DESCRIPTION	DATE	APPR.

MARK	DESCRIPTION	DATE	APPR.

U.S. ARMY CORPS OF ENGINEERS
GALVESTON DISTRICT
GALVESTON, TEXAS

TETRA TECH
400 112TH AVE NE
SUITE 300 BELIEVE, WA 98004

DESIGNED BY: JR/JJK | DATE: DD-MON-YYYY
DWN BY: DJS/ V.R. | CKD BY: DJL/GJK | SOLICITATION NO.: N/A
SUBMITTED BY: D LOVETTIG/ KOTZENBERGER | CONTRACT NO.: N/A
PLOT SCALE: 1:1 | PLOT DATE: MMMDDYYYY | FILE NUMBER: Filename
SIZE: ANSI D | FILE NAME: S-403.dgn

GULF INTRACOASTAL WATERWAY
BRAZOS RIVER FLOODGATES AND COLORADO RIVER LOCKS SYSTEMS, FEASIBILITY STUDY
ENGINEERING APPENDIX DRAWINGS

DEWATERING NEEDLES

SHEET IDENTIFICATION
S-403

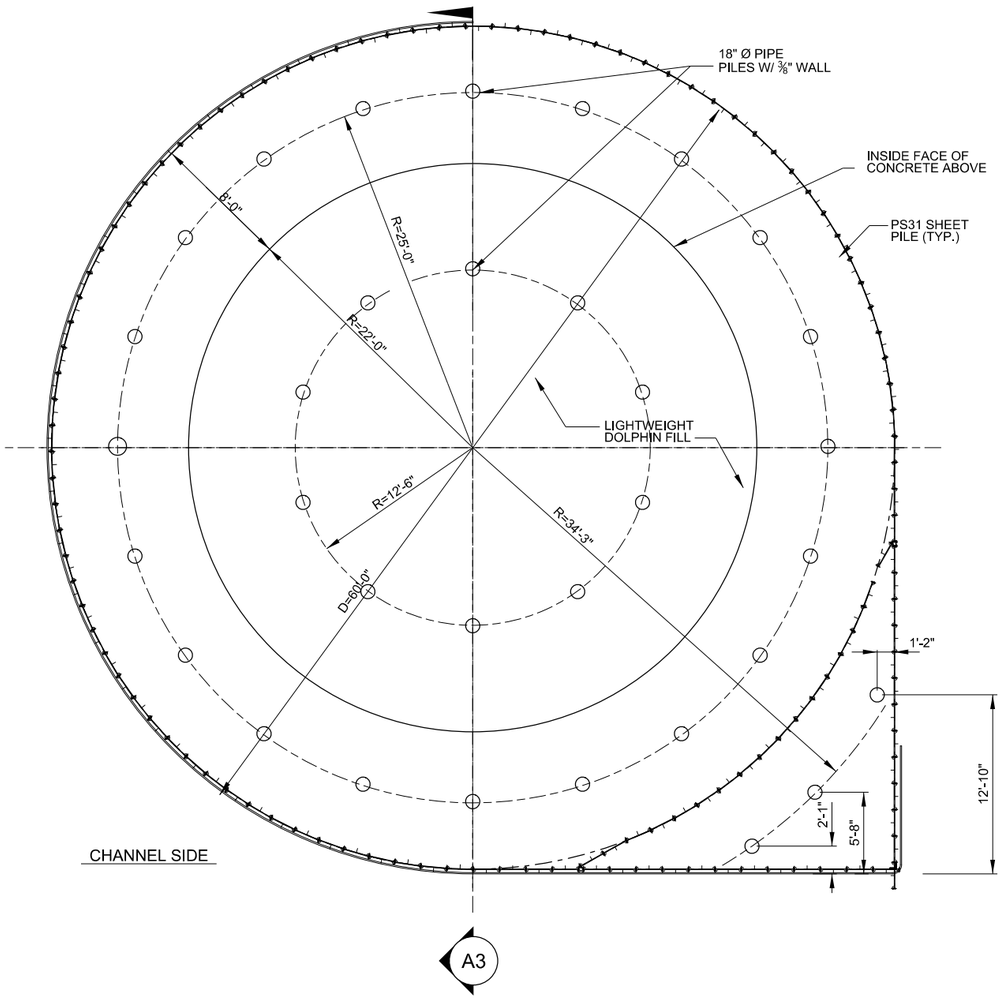

DOLPHIN PLAN

SCALE: 3/16" = 1'-0"

0 4' 8' 16'

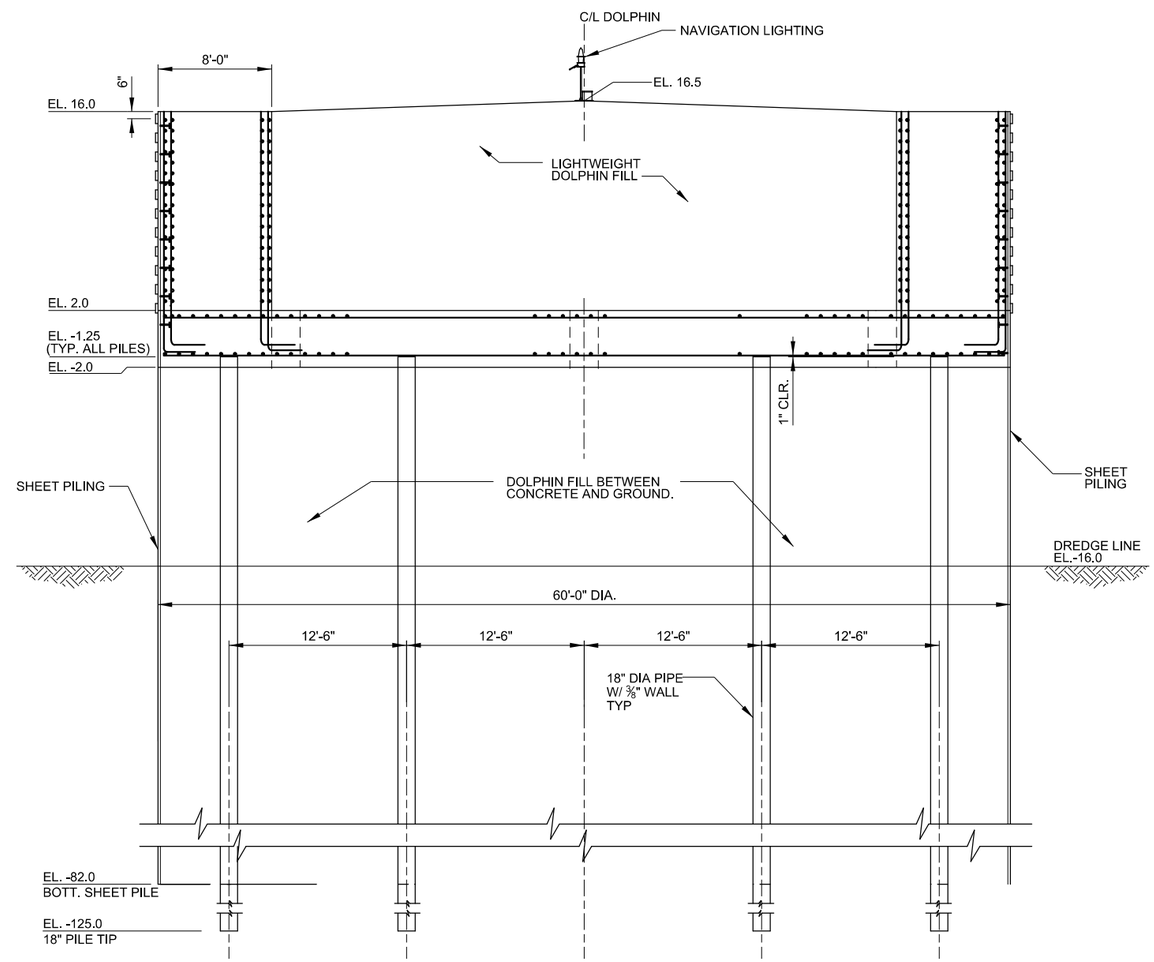

A3 SECTION

SCALE: 3/16"=1'-0"

0 4' 8' 16'

US Army Corps of Engineers®
GALVESTON DISTRICT

MARK	DESCRIPTION	DATE	APPR.	MARK	DESCRIPTION	DATE	APPR.

U.S. ARMY CORPS OF ENGINEERS
GALVESTON DISTRICT
GALVESTON, TEXAS

DESIGNED BY: JR/JK
DWN BY: DJ/JV/R
CKD BY: DL/GJK
SUBMITTED BY: D.LOVETTG KOTZENBERGER
DATE: DD-MON-YYYY
SOLICITATION NO.: N/A
CONTRACT NO.: N/A
FILE NUMBER: H:\dwg\dolphin
PLOT SCALE: 1:1
PLOT DATE: MM-DD-YYYY
SIZE: ANSI D
FILE NAME: S-404.dgn

TETRA TECH
400 112TH AVE NE
SUITE 300 BELIEVE, WA 98004

GULF INTRACOASTAL WATERWAY
BRAZOS RIVER FLOODGATES AND COLORADO
RIVER LOCKS SYSTEMS, FEASIBILITY STUDY
ENGINEERING APPENDIX DRAWINGS

END CELL DOLPHIN

SHEET IDENTIFICATION
S-404

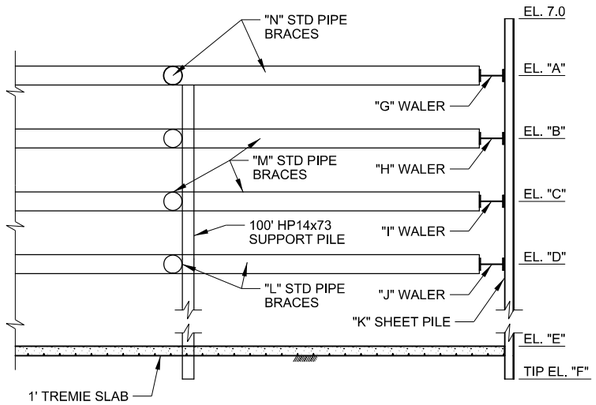

C1 SECTION

SCALE: ⅛" = 1'-0"

0 4' 8' 16'

LOCATION	"A"	"B"	"C"	"D"	"E"	"F"	"G"	"H"	"I"	"J"	"K"	"L"	"M"	"N"
COLORADO EAST	EL. -3.0	EL. -9.0	EL. -14.0	EL. -19.0	EL. -26.0	EL. -42.0	W30x148	W30x148	W30x148	W36x260	PZ-35	16"x⅝"	12"X⅜"	12"X⅜"
COLORADO WEST	EL. -3.0	EL. -9.0	EL. -14.0	EL. -19.0	EL. -26.0	EL. -48.0	W30x148	W30x148	W30x148	W36x260	PZ-35	16"x⅝"	12"X⅜"	12"X⅜"
BRAZOS EAST	EL. -3.0	EL. -9.0	EL. -14.0	EL. -19.0	EL. -26.0	EL. -40.0	W30x148	W30x148	W33x201	W36x300	PZ-35	20"x⅝"	14"X⅝"	12"X⅜"

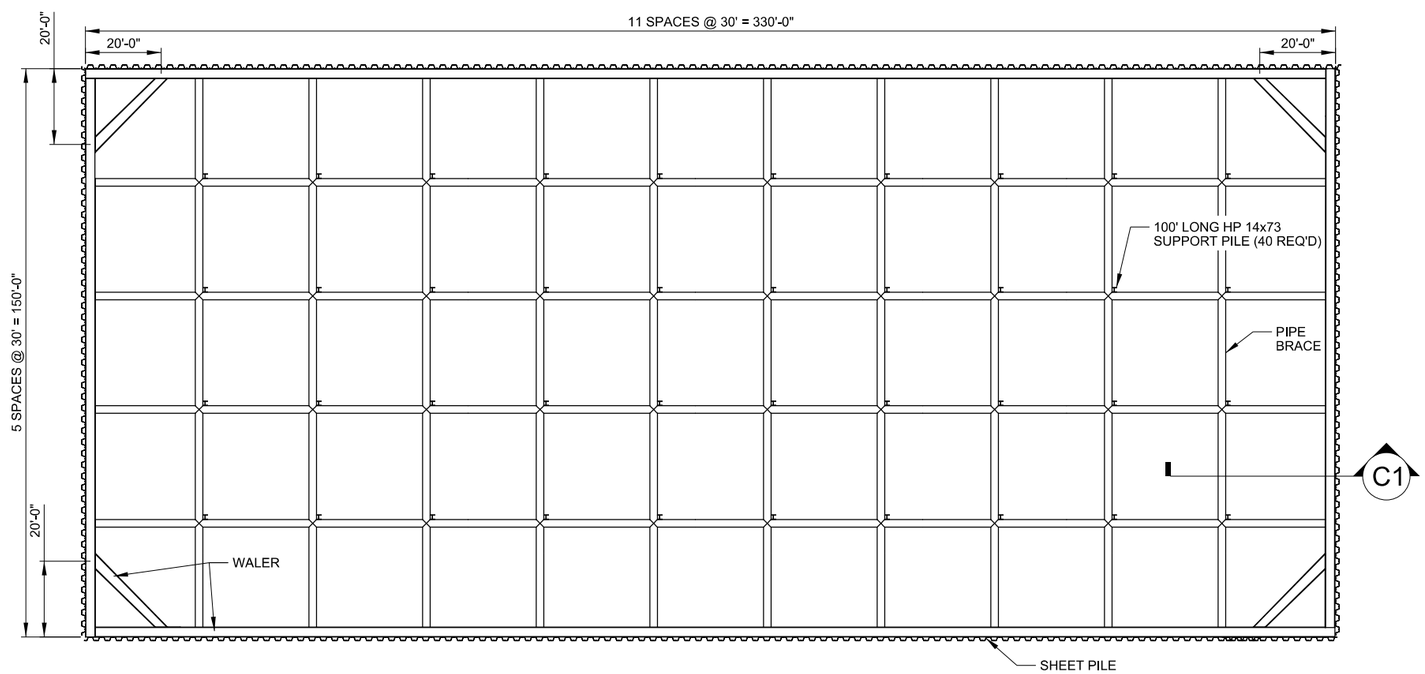

COFFERDAM PLAN

SCALE: 1" = 20'

0 10' 20' 40'

US Army Corps of Engineers®
GALVESTON DISTRICT

MARK	DESCRIPTION	DATE	APPR.

MARK	DESCRIPTION	DATE	APPR.

U.S. ARMY CORPS OF ENGINEERS
GALVESTON DISTRICT
GALVESTON, TEXAS

DESIGNED BY: J.R.;J.K.
DWN BY: D.S.;V.R.
CKD BY: D.L.;G.K.
SUBMITTED BY: D.LOVETT;G.KOTZENBERGER
DATE: DD-MON-YYYY
SOLICITATION NO.: N/A
CONTRACT NO.: N/A
PLOT SCALE: 1:1
PLOT DATE: YYYY/MM/DD
FILE NUMBER: H:\dwg\dwg\
SIZE: ANSI D
FILE NAME: S-405.dgn

TETRA TECH
400 112TH AVE NE
SUITE 300 BELLEVUE, WA 98004

GULF INTRACOASTAL WATERWAY
BRAZOS RIVER FLOODGATES AND COLORADO RIVER LOCKS SYSTEMS, FEASIBILITY STUDY
ENGINEERING APPENDIX DRAWINGS

COFFERDAM

SHEET IDENTIFICATION
S-405

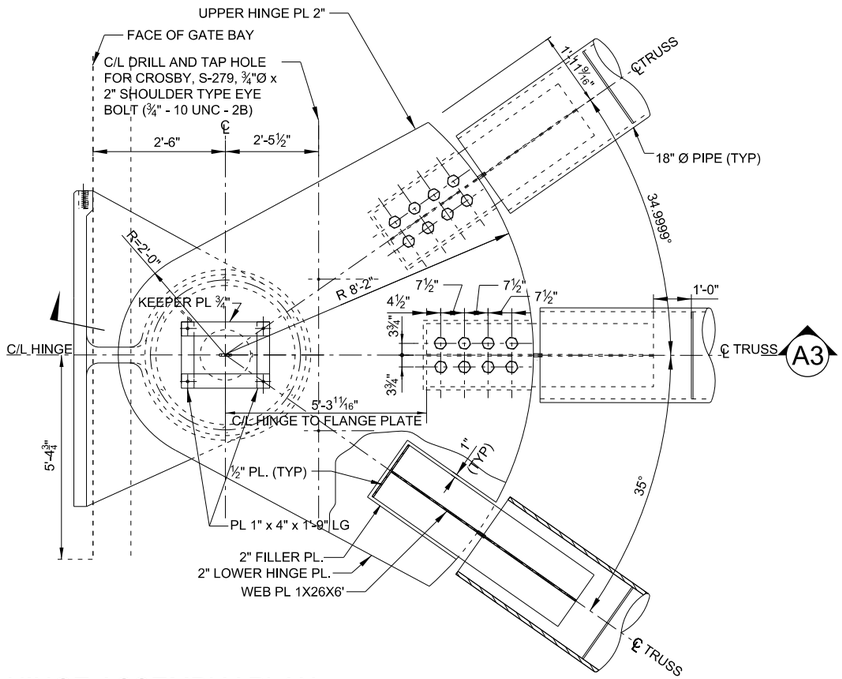

HINGE ASSEMBLY PLAN

SCALE: ½" = 1'-0"

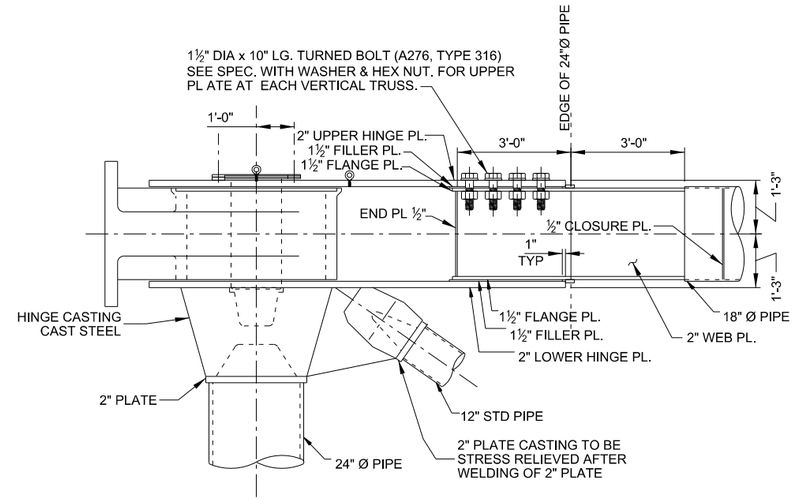

ELEVATION

SCALE: ½" = 1'-0"

NOTES:

1. HEX HEAD BUSHING BOLTS ARE NICKEL-COPPER.
2. SURFACE FINISH SYMBOLS ARE IN ACCORDANCE WITH ANSI B46.1. SURFACE FINISH VALUES ARE R.M.S. MICRO-INCHES.
3. ALL DECIMAL DIMENSIONS HAVE A TOLERANCE OF +/-0.01" UNLESS OTHERWISE NOTED.
4. AFTER MACHINING HINGE BALL BUSHING SHALL HAVE A 0.003" TO 0.001" CLEARANCE WITH THE HINGE BEARING COLLAR.
5. UPPER HINGE CASTING SHALL BE BOLTED TO THE WALL THEN LEVELED WITHIN .002" IN A 6" LENGTH IN EACH DIRECTION AT CENTERLINE OF HINGE BALL.

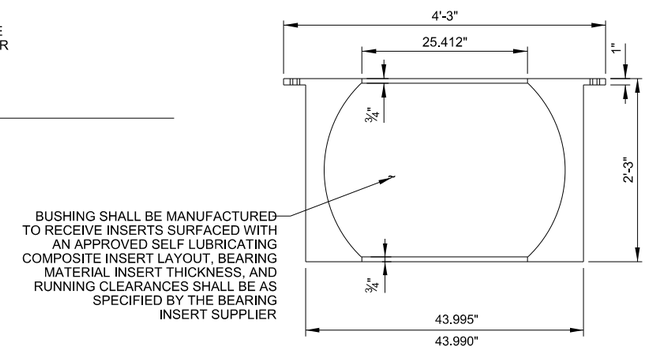

HINGE BALL BUSHING

SCALE: 1"=1'-0"
MAT'L: ASTM B271 ALLOY NO. C95500
MIN HARDNESS = 190 Brinell
NO. REQ'D 2

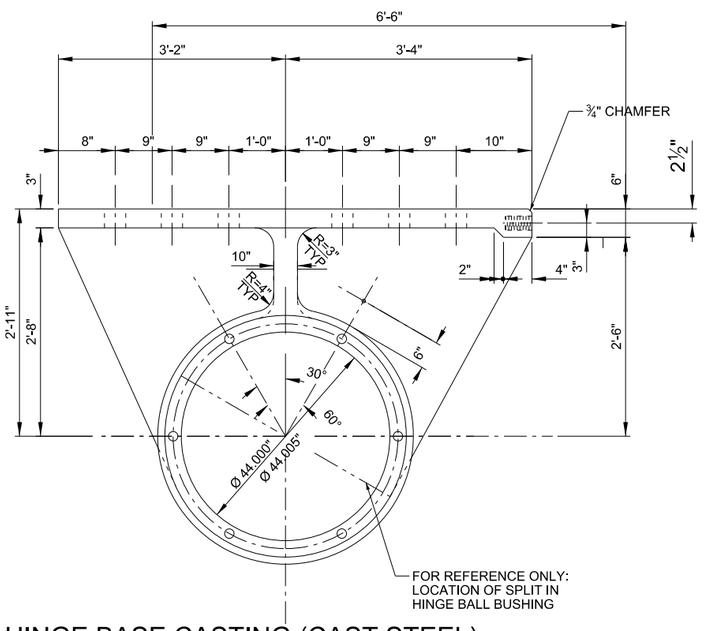

HINGE BASE CASTING (CAST STEEL)

SCALE: ¾" = 1'-0"

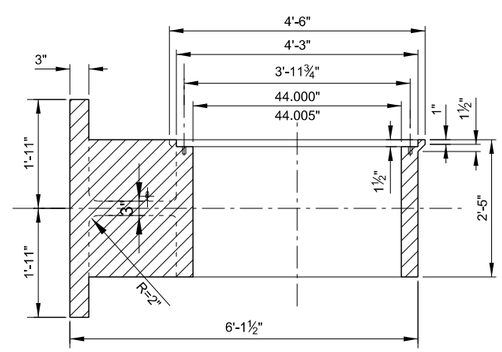

A3 SECTION

SCALE: ¾" = 1'-0"

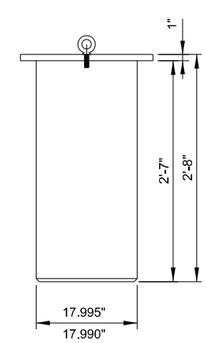

HINGE PIN

SCALE: 1"=1'-0"
MAT'L: ASTM A668
CLASS K FORGED STEEL
NO. REQ'D 2

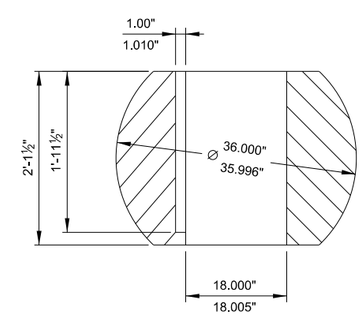

HINGE BALL

SCALE: 1"=1'-0"
MAT'L: ASTM A705, TYPE 630
MIN HARDNESS = 40 Rc
NO. REQ'D 2

US Army Corps of Engineers
GALVESTON DISTRICT

MARK	DESCRIPTION	DATE	APPR.	MARK	DESCRIPTION	DATE	APPR.

U.S. ARMY CORPS OF ENGINEERS
GALVESTON DISTRICT
GALVESTON, TEXAS

DESIGNED BY: LR/JJK
DWN BY: DJS/VR
CKD BY: DJL/GJK
SUBMITTED BY: D.LOVETTG KOTZENBERGER
DATE: DD-MON-YYYY
SOLICITATION NO.: N/A
CONTRACT NO.: N/A
PLOT SCALE: 1:1
PLOT DATE: MMM-DD-YYYY
FILE NUMBER: 4-44-444444
SIZE: ANSI D
FILE NAME: S-501.dgn

TETRA TECH
400 112TH AVE NE
SUITE 300 BELIEVE, WA 98004

GULF INTRACOASTAL WATERWAY
BRAZOS RIVER FLOODGATES AND COLORADO RIVER LOCKS SYSTEMS, FEASIBILITY STUDY
ENGINEERING APPENDIX DRAWINGS

HINGE ASSEMBLY AND DETAILS

SHEET IDENTIFICATION
S-501

NOTE

PINTLE SHAFT TO BE COATED WITH LIGHT LUBRICATING OIL IMMEDIATELY PRIOR TO INSTALLATION IN CASTING

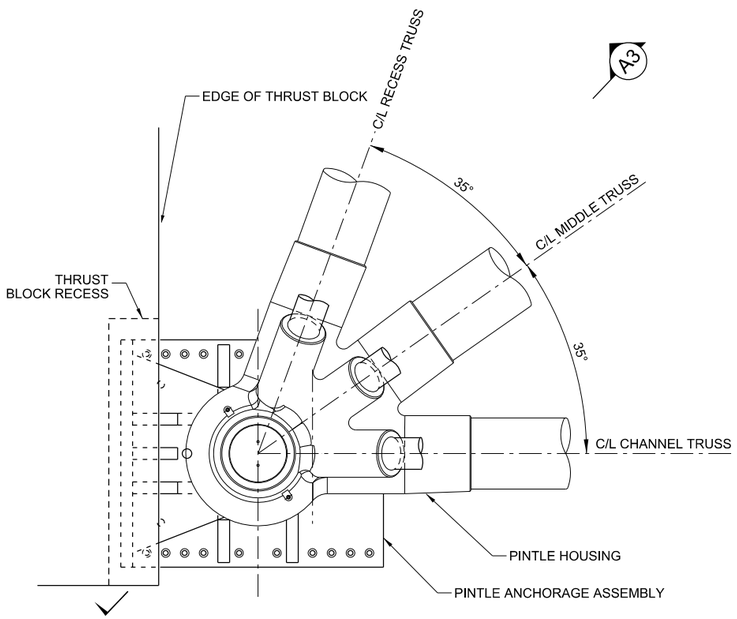

PINTLE ASSEMBLY PLAN

SCALE: ⅜"=1'-0"

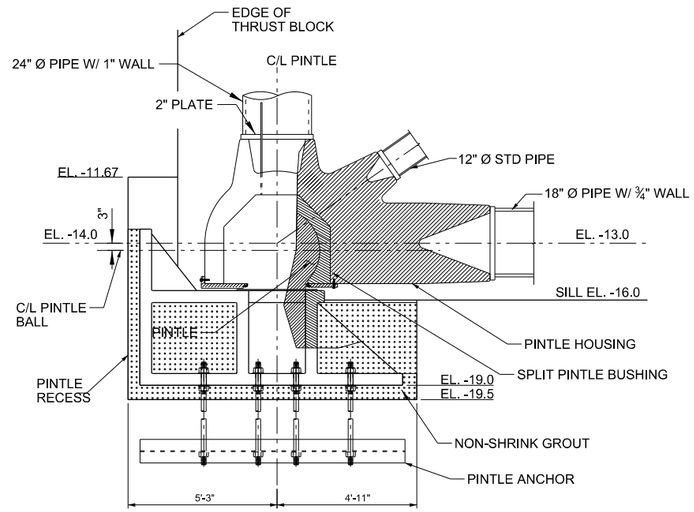

PINTLE ASSEMBLY ELEVATION

SCALE: ⅜"=1'-0"

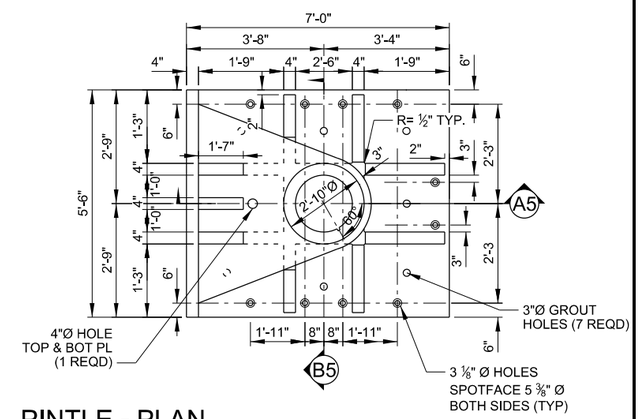

PINTLE - PLAN

SCALE: ⅜" = 1'-0"

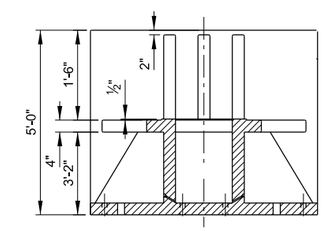

B5 SECTION

SCALE: ⅜"=1'-0"

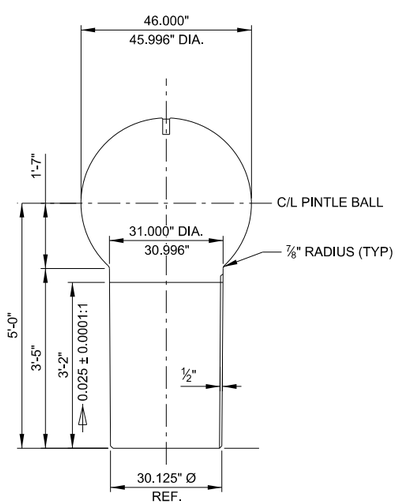

PINTLE

MATERIAL: ASTM A705, TYPE 630 MIN. HARDNESS = 40Rc

SCALE: ¾" = 1'-0"

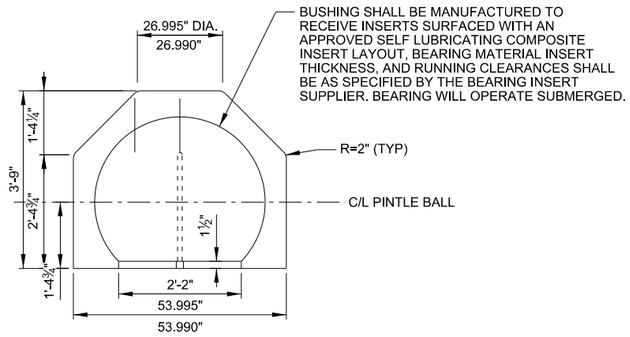

SPLIT PINTLE BUSHING

MATERIAL: ASTM B 271, ALLOY C95500

SCALE: ¾" = 1'-0"

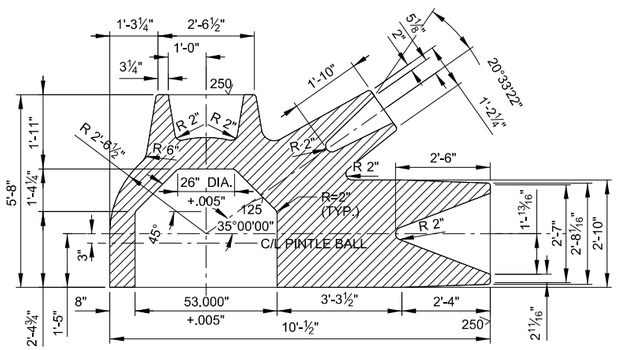

A3 SECTION

SCALE: ½" = 1'-0"

NOTE:
STEEL CASTING TO MEET REQUIREMENTS OF ATSM A148 GRADE 80-40

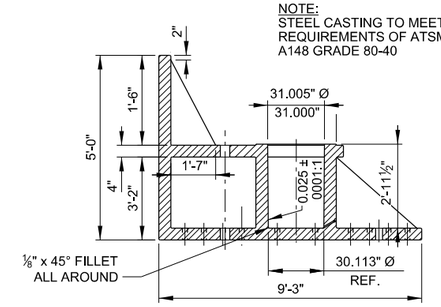

A5 SECTION

SCALE: ⅜"=1'-0"

US Army Corps of Engineers
GALVESTON DISTRICT

MARK	DESCRIPTION	DATE	APPR.	MARK	DESCRIPTION	DATE	APPR.

DESIGNED BY: JR/JK; DATE: DD-MON-YYYY
DWN BY: DJ/JV/R; CKD BY: DL/GJ/K; SOLICITATION NO.: N/A
SUBMITTED BY: D.LOVETTG KOTZENBERGER; CONTRACT NO.: N/A
PLOT SCALE: 1:1; PLOT DATE: MMMDDYYYY; FILE NUMBER: 14dwf-stuff
SIZE: ANSI D; FILE NAME: S-502.dgn

U.S. ARMY CORPS OF ENGINEERS
GALVESTON DISTRICT
GALVESTON, TEXAS

TETRA TECH
400 112TH AVE NE
SUITE 300 BELLEVUE, WA 98004

GULF INTRACOASTAL WATERWAY
BRAZOS RIVER FLOODGATES AND COLORADO RIVER LOCKS SYSTEMS, FEASIBILITY STUDY
ENGINEERING APPENDIX DRAWINGS

PINTLE ASSEMBLY AND DETAILS

SHEET IDENTIFICATION
S-502

NOTES:

1. THE ELECTRICAL WORK INCLUDES AS SHOWN ON THIS DRAWING AS WELL AS CONTROLS (HARD WIRED AND PLC) AND CCTV SYSTEM. FOR COST ESTIMATE PURPOSES, THE ESTIMATOR MAY ADD ADDITIONAL 600K TO ELECTRICAL ESTIMATE.

SURFACE MOUNTED
NEMA 3R
208/120 VOLTS
3 PHASE 4 WIRE, 60 HZ

PANEBOARD LP-1

225A BUS
100A MAIN CB
CONNECTED LOAD XX KVA
10K AMPS INTERRUPTING RATING (AIC)

CKT. NO.	SERVES	TRIP AMPS	A	B	C	TRIP AMPS	SERVES	CKT. NO.
1	INTERIOR LIGHTING	20	1		2	20	EXTERIOR LIGHTING	
3	INTERIOR LIGHTING	20	3		4	20	EXTERIOR LIGHTING	4
5	INT. RECEPTACLES	20	5		6	20	EXT. RECEPTACLES	6
7	INT. RECEPTACLES	20	7		8	20	NAVIGATION TRAFFIC SIGNAL LIGHT	8
9	MISC. RECEPTACLES	20	9		10	20		10
11	MOTOR HEATER	20	11		12	20	NAVIGATION HORN	12
13	CONTROL CABINET	20	13		14	20	FOG SIGNAL	14
15	CONTROL CABINET	20	15		16	20	EXHAUST FAN	16
17	A/C CONTROL HOUSE	20	17		18	20	SPARE	18
19	SPARE	20	19		20	20	SPARE	20
21	SPARE	20	21		22	20	SPARE	22
23	SPARE	20	23		24	20	SPARE	24
25	SPARE	20	25		26	20	CCTV SYSTEM	26
27	SUMP PUMP RECEPTACLE (EAST)	30	27		28	20	CCTV SYSTEM	28
29			29		30	20		30

NOTES:
-BUS BARS SHALL BE COPPER
-BOUND PANELBOARD TO GROUND

PANELBOARD CH1 SCHEDULE
NTS

SURFACE MOUNTED
NEMA 3R
208/120 VOLTS
3 PHASE 4 WIRE, 60 HZ

PANEBOARD LP-2

225A BUS
100A MAIN CB
CONNECTED LOAD XX KVA
10K AMPS INTERRUPTING RATING (AIC)

CKT. NO.	SERVES	TRIP AMPS	A	B	C	TRIP AMPS	SERVES	CKT. NO.
1	INTERIOR LIGHTING	20	1		2	20	EXTERIOR LIGHTING	
3	INTERIOR LIGHTING	20	3		4	20	EXTERIOR LIGHTING	4
5	INT. RECEPTACLES	20	5		6	20	EXT. RECEPTACLES	6
7	INT. RECEPTACLES	20	7		8	20	NAVIGATION TRAFFIC SIGNAL LIGHT	8
9	MISC. RECEPTACLES	20	9		10	20	SPARE	10
11	MOTOR HEATER	20	11		12	20	SPARE	12
13	CONTROL CABINET	20	13		14	20	SPARE	14
15	CONTROL CABINET	20	15		16	20	EXHAUST FAN	16
17	SPARE	20	17		18	20	SPARE	18
19	SPARE	20	19		20	20	SPARE	20
21	SPARE	20	21		22	20	SPARE	22
23	SPARE	20	23		24	20	SPARE	24
25	SPARE	20	25		26	20	CCTV SYSTEM	26
27	SUMP PUMP RECEPTACLE (EAST)	30	27		28	20	CCTV SYSTEM	28
29			29		30	20		30

NOTES:
-BUS BARS SHALL BE COPPER
-BOUND PANELBOARD TO GROUND

PANELBOARD CH2 SCHEDULE
NTS

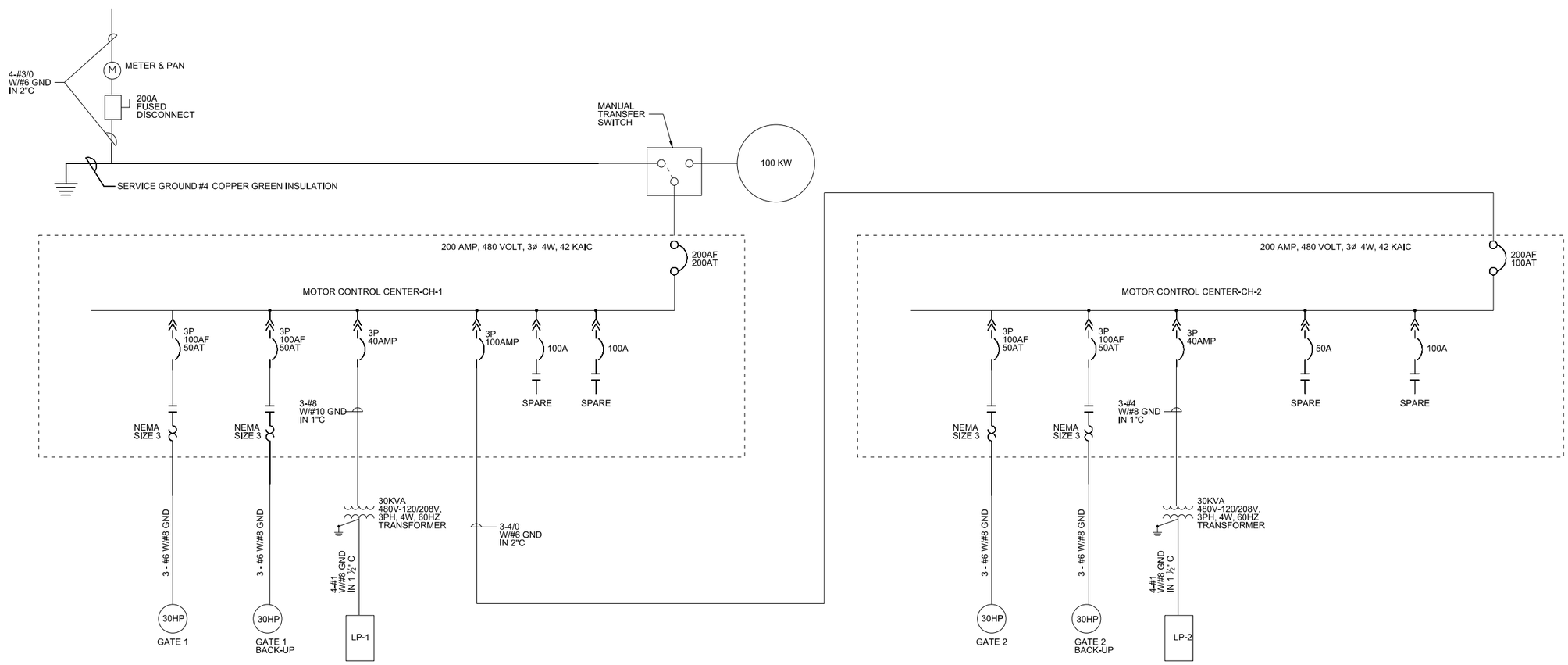

ONE-LINE DIAGRAM
NTS

US Army Corps of Engineers®
GALVESTON DISTRICT

MARK	DESCRIPTION	DATE	APPR.	MARK	DESCRIPTION	DATE	APPR.

U.S. ARMY CORPS OF ENGINEERS
GALVESTON DISTRICT
GALVESTON, TEXAS

DESIGNED BY: JR/JK
DWN BY: DJ/JV/R.
CKD BY: DL/GJK
SUBMITTED BY: D.LOVETT/G.KOTZENBERGER
DATE: DD-MON-YYYY
SOLICITATION NO.: N/A
CONTRACT NO.: N/A
PLOT SCALE: 1:1
PLOT DATE: MMM-YYYY
FILE NUMBER: H:\dwg\dwg\
SIZE: ANSI D
FILE NAME: E-601.dgn

TETRA TECH
400 112TH AVE NE
SUITE 300 BELLEVUE, WA 98004

GULF INTRACOASTAL WATERWAY
BRAZOS RIVER FLOODGATES AND COLORADO RIVER LOCKS SYSTEMS, FEASIBILITY STUDY
ENGINEERING APPENDIX DRAWINGS

ELECTRICAL DIAGRAM AND SCHEDULE

SHEET IDENTIFICATION
E-601

NOTE:

1. USE HAGGLUNDS VIKING SERIES 84 LSHT HYDRAULIC MOTOR.

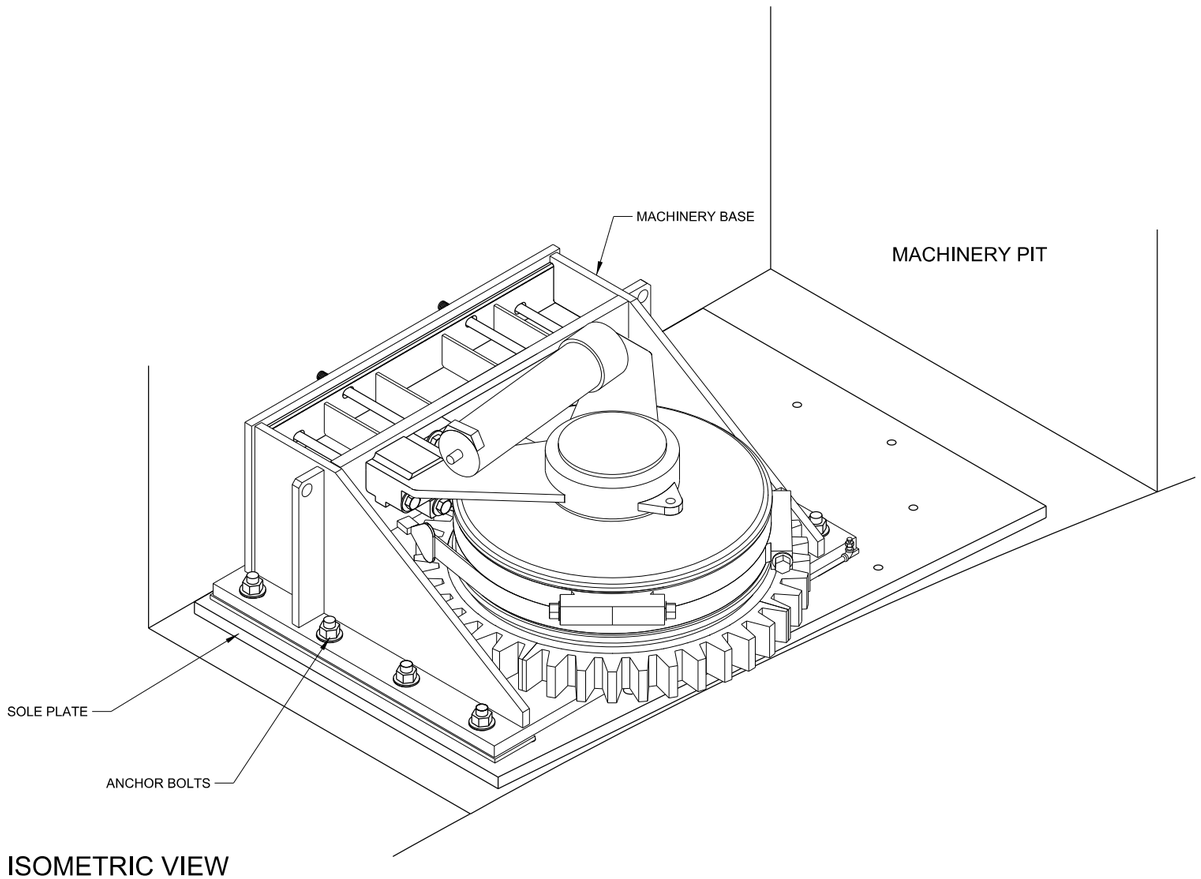

ISOMETRIC VIEW

N.T.S.

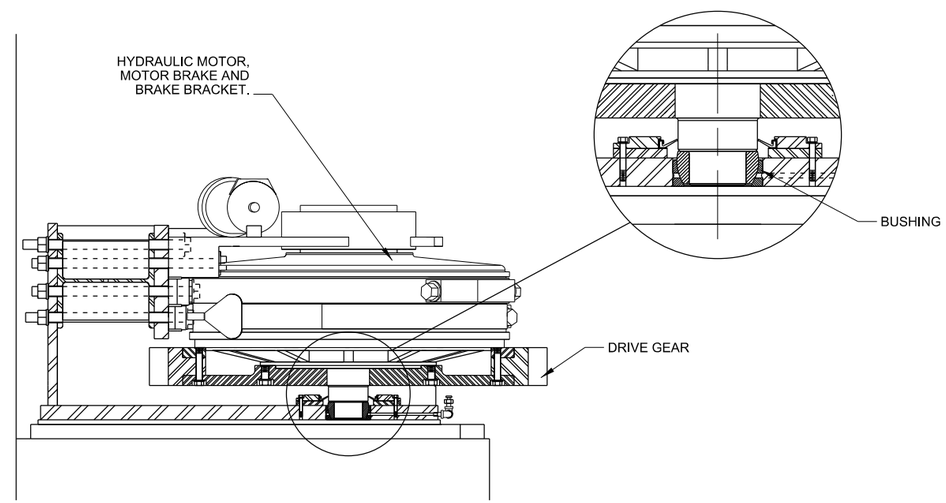

SECTIONAL VIEW

N.T.S.

US Army Corps of Engineers®
GALVESTON DISTRICT

MARK	DESCRIPTION	DATE	APPR.

MARK	DESCRIPTION	DATE	APPR.

U.S. ARMY CORPS OF ENGINEERS
GALVESTON DISTRICT
GALVESTON, TEXAS

TETRA TECH
400 112TH AVE NE
SUITE 300 BELIEVE, WA 98004

DESIGNED BY: J.R.;J.K.
DWN BY: D.S.;V.R.
CKD BY: D.L.;G.K.
SUBMITTED BY: D LOVETTIG KOTZENBERGER
PLOT SCALE: 1:1
PLOT DATE: MM/DD/YYYY
SIZE: ANSI D
FILE NAME: M-901.dgn
DATE: DD-MON-YYYY
SOLICITATION NO.: N/A
CONTRACT NO.: N/A
FILE NUMBER: Filename

GULF INTRACOASTAL WATERWAY
BRAZOS RIVER FLOODGATES AND COLORADO RIVER LOCKS SYSTEMS, FEASIBILITY STUDY
ENGINEERING APPENDIX DRAWINGS

GATE OPERATING MACHINERY

SHEET IDENTIFICATION
M-901