NOV 2 3 2018

Annova LNG Common Infrastructure, LLC
SWG-2015-00110
Brownsville Ship Channel and Wetlands, Cameron County, Texas.
Sheet 1 of 40.

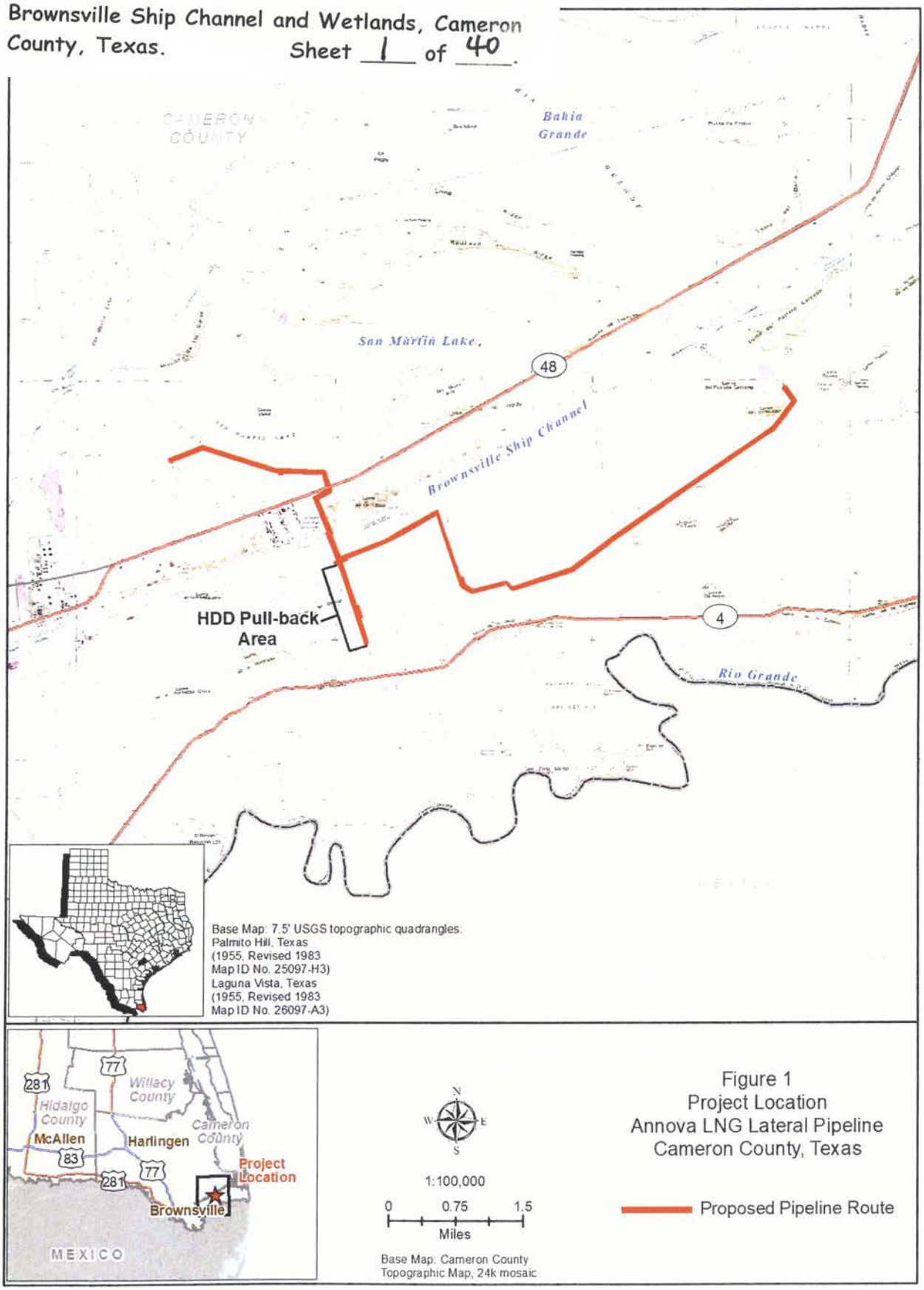

Figure 1
Project Location
Annova LNG Lateral Pipeline
Cameron County, Texas

Proposed Pipeline Route

DEC 1 3 2018

Annova LNG Common Infrastructure, LLC
SWG-2015-00110
Brownsville Ship Channel and Wetlands, Cameron County, Texas.
Sheet 2 of 40.

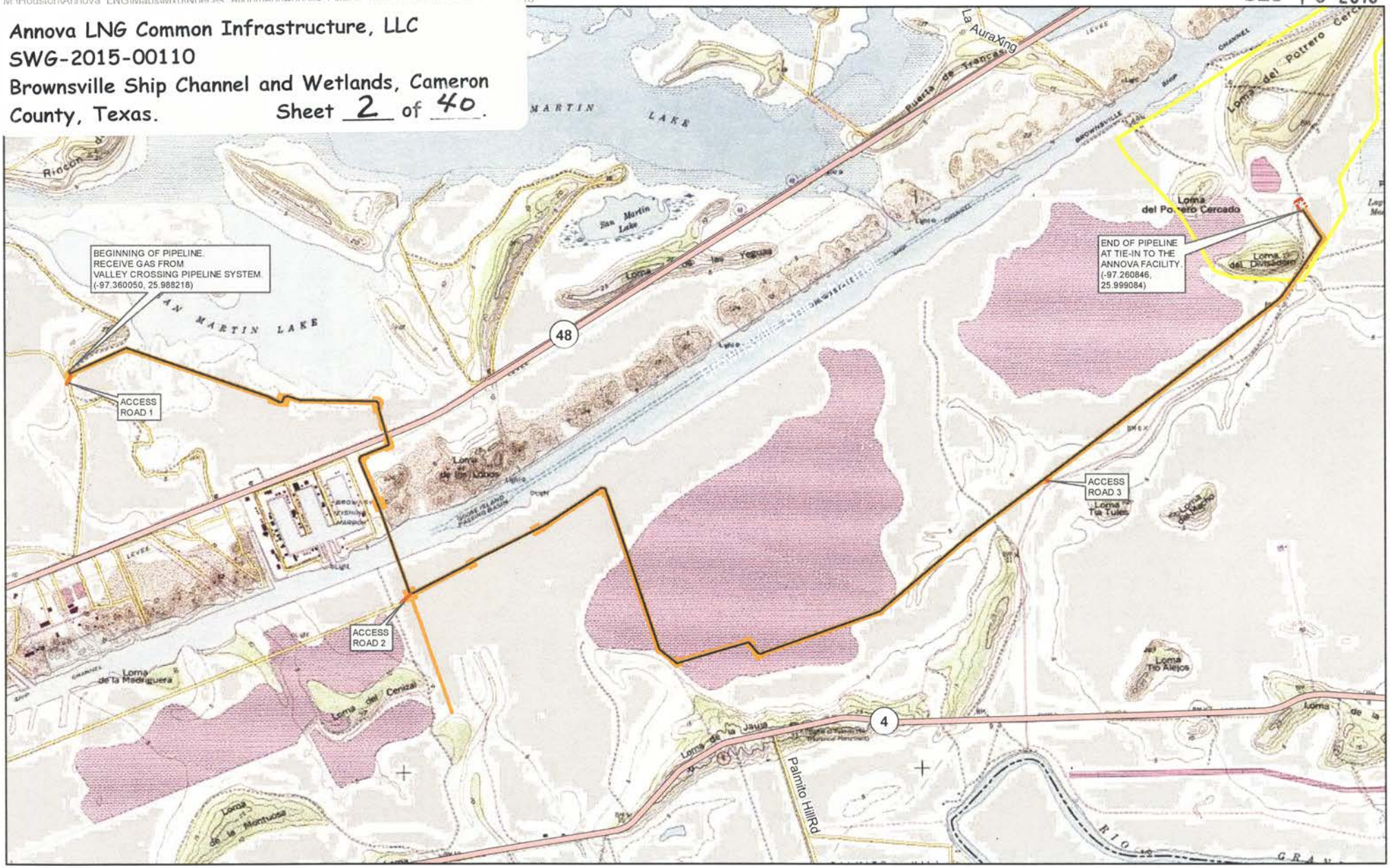

Proposed Centerline
Access Road
Workspace
Annova Facility
Gas Meter Station
State Highway
Local Road

0 0.5 1
Miles

N

Figure 1-2
Topographic Map
Proposed Lateral

Annova LNG Common Infrastructure, LLC
SWG-2015-00110
Brownsville Ship Channel and Wetlands, Cameron County, Texas. Sheet 3 of 40.

Annova LNG Common Infrastructure, LLC
Cameron County, Texas
Proposed Lateral Project
Waters of the U.S. Impacts Table

Feature ID	Align. Sheet Page Number	Approximate MP	Latitude	Longitude	Water Type	Crossing Method	Temporary Impacts Acres	Length Crossed by Pipeline Centerline (ft)	Watershed (HUC8)	Watershed Name
W-2	1 - 4	1.02	25.98677	-97.34471	Estuarine Emergent Wetland (EEM)	Open Cut	21.78	8,141	12110208	South Laguna Madre
W-2[1]	4	1.79	25.98365	-97.33484	Estuarine Emergent Wetland (EEM)	HDD	0.00	23	12110208	South Laguna Madre
W-3[1]	4	1.80	25.98351	-97.33480	Estuarine Scrub-Shrub Wetland (ESS)	HDD	0.00	79	12110208	South Laguna Madre
W-4	5	2.28	25.97810	-97.33573	Palustrine Emergent Wetland (PEM)	Open Cut	0.10	0	12110208	South Laguna Madre
OW-1[1]	5	2.51	25.97508	-97.33425	Open Water	HDD	0.00	853	12110208	South Laguna Madre
W-6[1]	5	2.60	25.97393	-97.33381	Estuarine Emergent Wetland (EEM)	HDD	0.00	22	12110208	South Laguna Madre
UF-1[1]	5	2.62	25.97356	-97.33366	Unvegetated Flat/Washover	HDD	0.00	272	12110208	South Laguna Madre
W-9[1]	6	3.18	25.97438	-97.32682	Estuarine Scrub-Shrub Wetland (ESS)	HDD	0.00	67	12110208	South Laguna Madre
UF-2[1]	6 - 7	3.27	25.97493	-97.32559	Unvegetated Flat/Washover	HDD	0.00	744	12110208	South Laguna Madre
W-10[1]	6 - 7	3.33	25.97535	-97.32471	Estuarine Emergent Wetland (EEM)	HDD	0.00	128	12110208	South Laguna Madre
W-11[1]	6 - 7	3.38	25.97565	-97.32403	Estuarine Scrub-Shrub Wetland (ESS)	HDD	0.00	259	12110208	South Laguna Madre
UF-3	10 - 11	5.67	25.96884	-97.29924	Unvegetated Flat/Washover	Open Cut	11.18	4,600	12110208	South Laguna Madre
W-12	11	6.14	25.97195	-97.29257	Estuarine Emergent Wetland (EEM)	Open Cut	0.48	255	12110208	South Laguna Madre
W-15	11	6.36	25.97391	-97.28970	Estuarine Emergent Wetland (EEM)	Open Cut	0.00	0	12110208	South Laguna Madre
W-14	11 - 12	6.39	25.97426	-97.28943	Estuarine Emergent Wetland (EEM)	Open Cut	2.33	967	12110208	South Laguna Madre
W-16	12	6.50	25.97513	-97.28796	Estuarine Emergent Wetland (EEM)	Open Cut	0.00	0	12110208	South Laguna Madre
W-17	12	6.70	25.97695	-97.28554	Estuarine Emergent Wetland (EEM)	Open Cut	0.25	0	12110208	South Laguna Madre
W-19	12	6.73	25.97717	-97.28512	Estuarine Emergent Wetland (EEM)	Open Cut	0.02	0	12110208	South Laguna Madre
W-18	12	6.74	25.97739	-97.28503	Estuarine Emergent Wetland (EEM)	Open Cut	0.13	79	12110208	South Laguna Madre
W-21	12	6.77	25.97753	-97.28458	Estuarine Emergent Wetland (EEM)	Open Cut	0.01	0	12110208	South Laguna Madre
W-22	12	6.79	25.97775	-97.28432	Estuarine Emergent Wetland (EEM)	Open Cut	0.01	0	12110208	South Laguna Madre
W-24	12 - 13	6.80	25.97793	-97.28422	Estuarine Emergent Wetland (EEM)	Open Cut	0.08	39	12110208	South Laguna Madre
W-25	12 - 13	6.84	25.97820	-97.28378	Estuarine Emergent Wetland (EEM)	Open Cut	0.09	11	12110208	South Laguna Madre
W-26	12 - 13	6.85	25.97836	-97.28361	Estuarine Emergent Wetland (EEM)	Open Cut	0.04	21	12110208	South Laguna Madre
W-28	13	6.88	25.97863	-97.28318	Estuarine Emergent Wetland (EEM)	Open Cut	0.12	51	12110208	South Laguna Madre
W-30	13	7.22	25.98164	-97.27892	Estuarine Emergent Wetland (EEM)	Open Cut	0.09	110	12110208	South Laguna Madre
W-32	13	7.35	25.98268	-97.27719	Estuarine Emergent Wetland (EEM)	Open Cut	0.13	40	12110208	South Laguna Madre
W-33	13 - 14	7.40	25.98310	-97.27656	Estuarine Emergent Wetland (EEM)	Open Cut	0.27	77	12110208	South Laguna Madre
W-34	13 - 14	7.52	25.98422	-97.27497	Estuarine Emergent Wetland (EEM)	Open Cut	2.23	1,051	12110208	South Laguna Madre
W-35	14	7.69	25.98564	-97.27275	Estuarine Emergent Wetland (EEM)	Open Cut	0.12	0	12110208	South Laguna Madre
W-36	14	7.71	25.98596	-97.27259	Estuarine Emergent Wetland (EEM)	Open Cut	0.02	16	12110208	South Laguna Madre
W-38	14	7.77	25.98625	-97.27174	Estuarine Emergent Wetland (EEM)	Open Cut	0.01	0	12110208	South Laguna Madre
W-40	14	7.79	25.98661	-97.27166	Estuarine Emergent Wetland (EEM)	Open Cut	0.01	0	12110208	South Laguna Madre
W-42	14	7.87	25.98735	-97.27060	Estuarine Emergent Wetland (EEM)	Open Cut	0.00	0	12110208	South Laguna Madre
W-43	14	7.90	25.98756	-97.27010	Estuarine Emergent Wetland (EEM)	Open Cut	0.24	69	12110208	South Laguna Madre
W-45	14 - 15	8.00	25.98842	-97.26893	Estuarine Emergent Wetland (EEM)	Open Cut	0.18	204	12110208	South Laguna Madre
W-47	15	8.25	25.99059	-97.26565	Estuarine Emergent Wetland (EEM)	Open Cut	2.11	1,425	12110208	South Laguna Madre
W-49	15 - 16	8.60	25.99399	-97.26146	Estuarine Emergent Wetland (EEM)	Open Cut	0.04	0	12110208	South Laguna Madre

[1] Impacts to the delineated wetland feature would be avoided during construction through the implementation of horizontal directional drill construction methods.

Estuarine Emergent Wetland (EEM) Total	30.8
Unvegetated Flat/Washover Total	11.2
Palustrine Emergent Wetland (PEM)	0.1
Open Water Total	0.0
Estuarine Scrub-Shrub Wetland (ESS)	0.0
Grand Total	42.1

NOV 23 2018

Annova LNG Common Infrastructure, LLC
SWG-2015-00110
Brownsville Ship Channel and Wetlands, Cameron County, Texas.

Sheet 4 of 40.

NOV 2 3 2018

M:\Houston\Annova_LNG\Maps\Mxd\Nueces_Alignment\Annova_Lateral_BSC_Crossing.mxd 11/19/2018

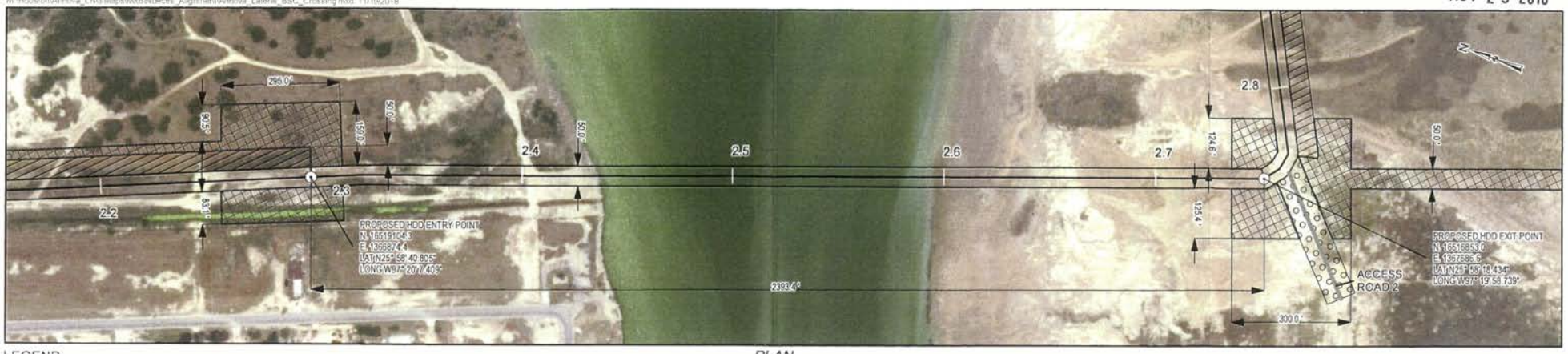

LEGEND

- HDD BOREHOLE
- PROPOSED CENTERLINE
- ACCESS ROAD
- PERMANENT EASEMENT
- TWS
- ATWS
- ATWS - ACCESS

PLAN

0 250 500
Feet
1" = 250'

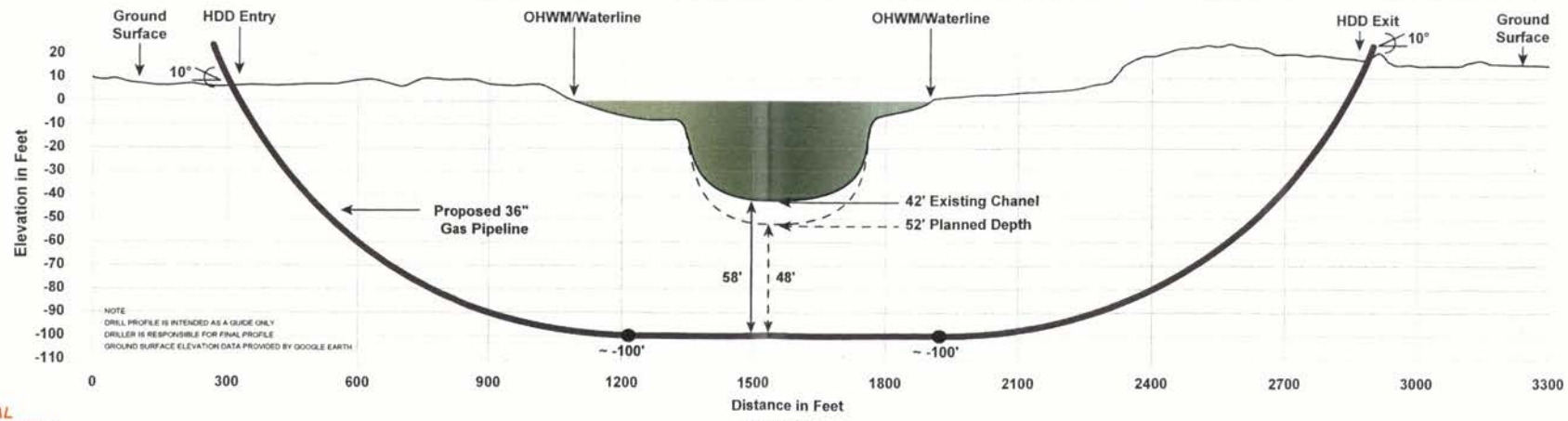

CONCEPTUAL
NOT FOR CONSTRUCTION

PROFILE

CONSTRUCTION NOTES

1. ALL EQUIPMENT MUST ACCESS THE SITE ALONG THE CONSTRUCTION RIGHT OF WAY OR FROM APPROVED ACCESS ROADS.
2. WORK SPACE MAXIMUM WORK SPACE LIMITS ARE DEPICTED. RESTRICT CLEARING TO THE WORK SPACE INDICATED AT THE ENTRY AND EXIT POINTS. CLEARING BETWEEN THE ENTRY AND EXIT POINTS REQUIRES PRIOR APPROVAL FROM THE ENVIRONMENTAL INSPECTOR AND IS LIMITED TO THE AMOUNT NECESSARY TO STRING SURVEY WIRES AND INSTALL PUMPS AND PIPING TO OBTAIN WATER (WHERE APPROVED).
3. WATER SOURCE DRILL WATER AND HYDROSTATIC TEST WATER SHALL BE OBTAINED FROM AN APPROVED SOURCE.
4. HYDROSTATIC TEST PRE-INSTALLATION AND POST INSTALLATION HYDROSTATIC TEST SHALL BE CONDUCTED IN ACCORDANCE WITH THE HYDROSTATIC TEST PLAN. TEST WATER SHALL BE SAMPLED AND TESTED IN ACCORDANCE WITH PERMIT REQUIREMENTS. THE TEST WATER SHALL BE DISCHARGED IN AN UPLAND AREA INTO AN EROSION CONTROL STRUCTURE OF STRAW WATTLES AND/OR SILT FENCES, GEOTEXTILE FILTER BAG, OR COLLECTED IN A TRUCK AND HAULED TO AN APPROVED DISPOSAL SITE. UPON COMPLETION OF DEWATERING AND DRYING, A CALIPER PIG SURVEY SHALL BE COMPLETED IN ACCORDANCE WITH THE CONTRACT DOCUMENTS.
5. SPILL PREVENTION REFUELING OF ALL EQUIPMENT SHALL BE COMPLETED IN ACCORDANCE WITH THE SPCC PLAN.
6. EROSION AND SEDIMENT CONTROL CONTRACTOR SHALL SUPPLY INSTALL AND MAINTAIN SEDIMENT CONTROL STRUCTURES IN ACCORDANCE WITH CONTRACT DOCUMENTS. CONTRACTOR SHALL INSTALL ADDITIONAL EROSION CONTROL STRUCTURES AS DIRECTED BY THE ENVIRONMENTAL INSPECTOR.
7. INSTALLATION THE PIPE SECTION FOR THE DRILLED CROSSING SHALL BE MADE UP WITHIN THE APPROVED CONSTRUCTION RIGHT OF WAY AT THE DRILL EXIT POINT (SEE ALIGNMENT SHEETS). AFTER THE PILOT HOLE IS COMPLETE, CONTRACTOR'S ACTUAL DRILL PROFILE SHALL BE SUBMITTED FOR APPROVAL. CONTRACTOR SHALL ASSESS THE NEED FOR AND SUPPLY APPROPRIATE BALLAST DURING PULLBACK.
8. DRILLING FLUID DISPOSAL CONTRACTOR SHALL DISPOSE OF EXCESS DRILLING FLUID AS DIRECTED BY THE COMPANY REPRESENTATIVE IN ACCORDANCE WITH PERMIT CONDITIONS. UNDER NO CIRCUMSTANCES SHALL DRILLING FLUID BE DISPOSED OF IN WATERBODIES OR WETLANDS. ANY DRILLING FLUID WHICH INADVERTANTLY SURFACES AT POINTS OTHER THAN THE ENTRY OR EXIT POINTS SHALL BE CONTAINED AND COLLECTED TO THE EXTENT PRACTICAL AND DISPOSED OF AS DIRECTED BY THE COMPANY REPRESENTATIVE IN ACCORDANCE WITH PERMIT CONDITIONS.
9. CLEANUP/STABILIZATION/RESTORATION ALL DISTURBED AREAS SHALL BE RETURNED TO THE ORIGINAL CONTOURS. IF THE TERRAIN ALLOWS AND ACCESS IS PERMITTED, CONTRACTOR SHALL UTILIZE LOW GROUND PRESSURE EQUIPMENT, OR OTHER EQUIPMENT APPROVED BY OWNER, TO FACILITATE CONTAINMENT AND CLEANUP OF ANY INADVERTANT RETURNS THAT OCCUR DURING THE HDD INSTALLATION PROCESS.
10. CONTRACTOR IS RESPONSIBLE FOR CALLING TEXAS ONE-CALL AND LOCATING ALL UNDERGROUND UTILITIES PRIOR TO BEGINNING CONSTRUCTION. IF ANY UTILITY IS LOCATED WITHIN 15 FEET OF THE DESIGNED HDD PROFILE AND ALIGNMENT, CONTRACTOR SHALL OBTAIN APPROVAL FROM COMPANY PRIOR TO INITIATING HDD OPERATIONS.
11. IT IS THE CONTRACTOR'S RESPONSIBILITY TO IDENTIFY AND PROTECT ANY FOREIGN UTILITY THAT MAY BE AFFECTED BY THE HDD OPERATION.

PROPOSED LATERAL PIPELINE

HORIZONTAL DIRECTIONAL DRILL
PROPOSED 36" GAS PIPELINE AT
BROWNSVILLE SHIP CHANNEL
M.P. 2.3

NOV 2 3 2018

Annova LNG Common Infrastructure, LLC
SWG-2015-00110
Brownsville Ship Channel and Wetlands, Cameron County, Texas. Sheet 5 of 40.

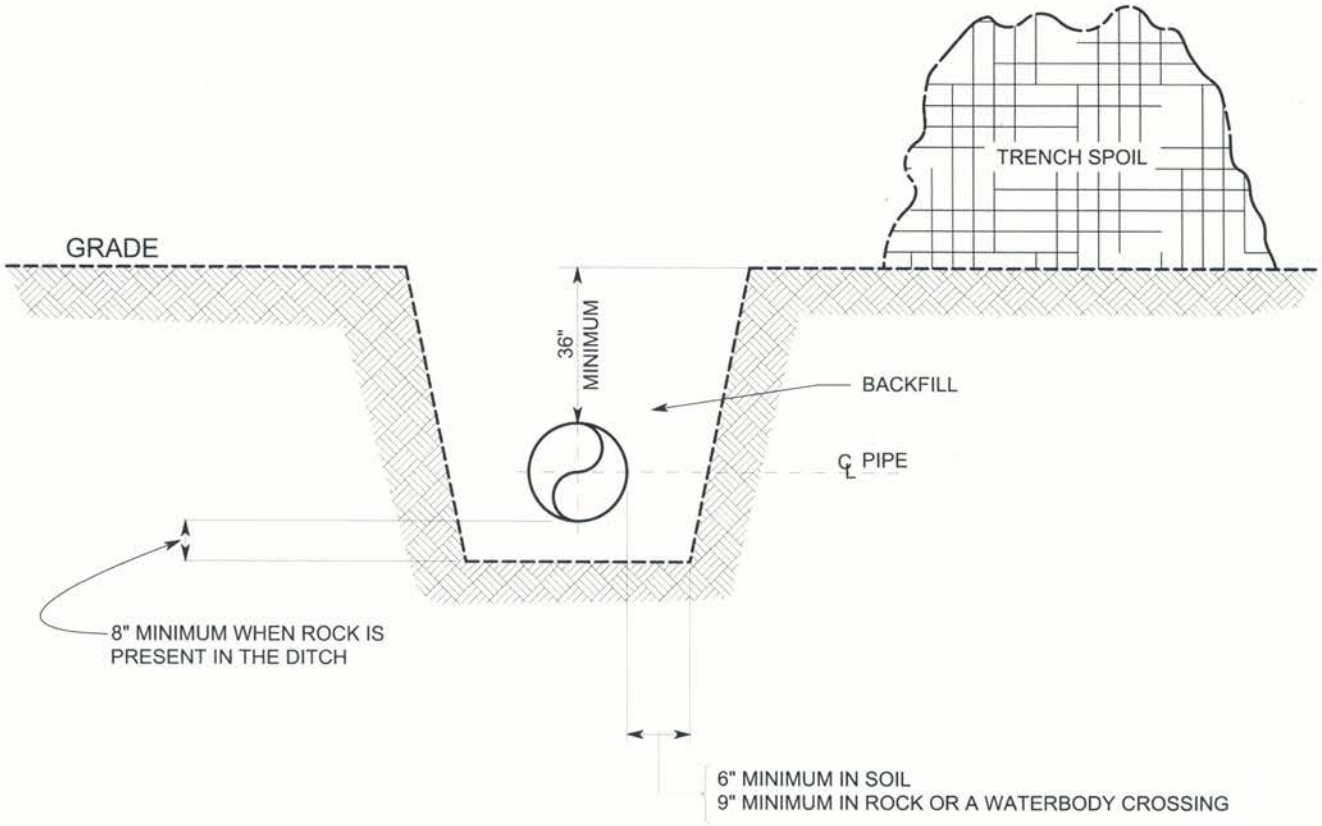

CROSS-SECTION VIEW

NOTES:

1. ALL PRECONSTRUCTION CONTOURS WILL BE RE-ESTABLISHED UPON COMPLETION OF PIPE INSTALLATION. EXCEPT IN WETLANDS, A CROWN MAY BE LEFT TO ACCOUNT FOR DITCH SETTLING, AS DIRECTED BY THE ENVIRONMENTAL INSPECTOR.
2. IN COLD WATER FISHERY STREAMS, THE TOP 12" OF THE TRENCH WILL BE BACKFILLED WITH CLEAN GRAVEL OR NATIVE COBBLES UNLESS OTHERWISE SPECIFIED BY THE PERMITTING AGENCY.

	TYPICAL TRENCH DETAIL	FIGURE CW-1
		DWG. ES-0001 REV.

Q:\S-U\SPE\2013-200.00\AutoCAD\Final\es0001.dwg
Wayne Sicora 5/28/2014 11:36 AM
I.G. ES0001.DWG

NOV 23 2018

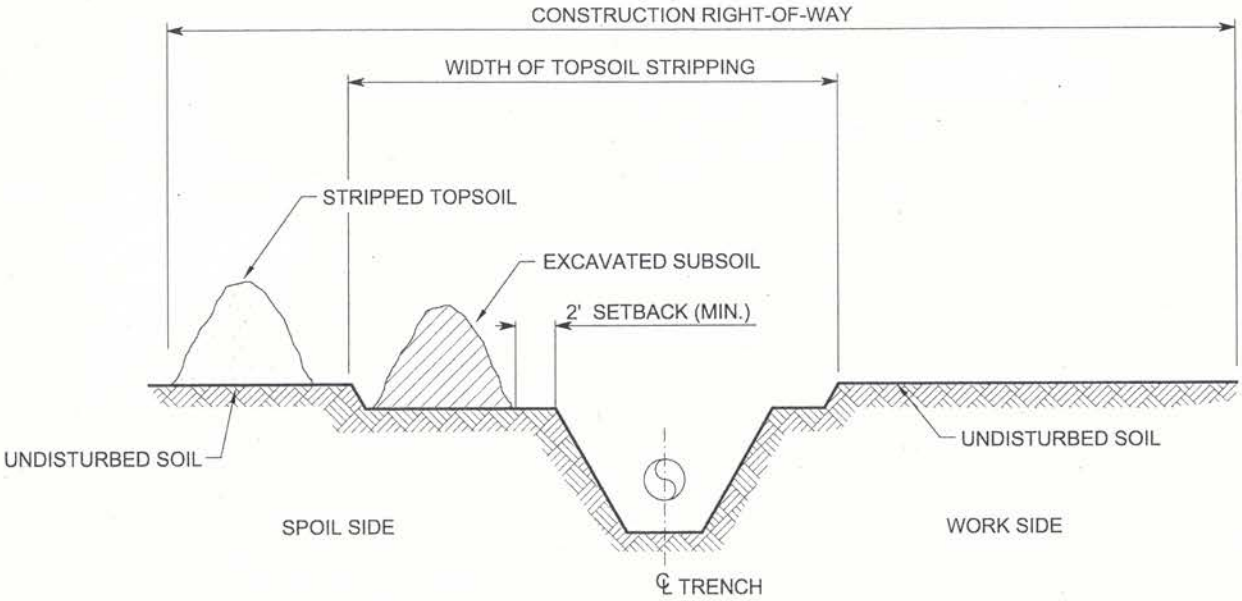

DITCH PLUS SPOILSIDE TOPSOIL SEGREGATION

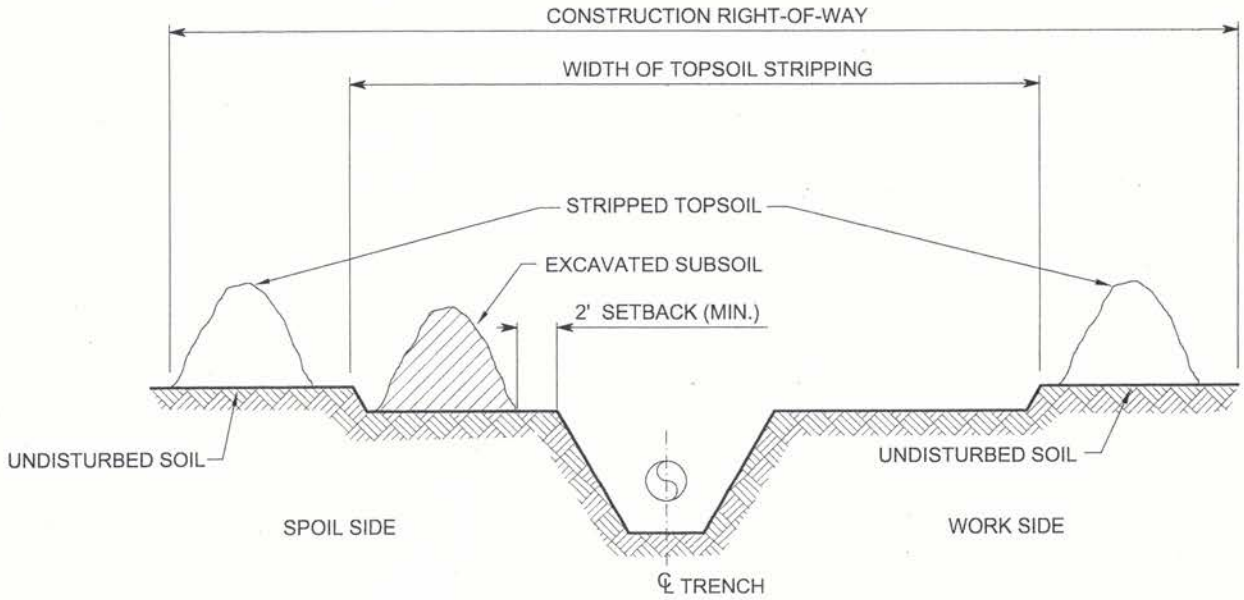

FULL RIGHT-OF-WAY TOPSOIL STRIPPING

NOTES:

1. TOPSOIL MAY BE STORED IN LOCATIONS AS SHOWN ABOVE OR AT OTHER COMPANY APPROVED LOCATIONS WITHIN THE CONSTRUCTION R.O.W.
2. LEAVE GAPS IN SPOIL PILES FOR WATER RUN-OFF.
3. MAINTAIN SEPARATION OF SALVAGED TOPSOIL AND SUBSOIL THROUGHOUT ALL CONSTRUCTION ACTIVITIES.
4. STABILIZE TOPSOIL PILES AND MINIMIZE LOSS DUE TO WATER OR WIND EROSION WITH USE OF SEDIMENT BARRIERS, MULCH, TEMPORARY SEEDING, TACKIFIERS OR FUNCTIONAL EQUIVALENTS, WHERE NECESSARY.

	RIGHT-OF-WAY TOPSOIL SEGREGATION TECHNIQUES	FIGURE CW-2
		DWG. ES-0002 REV.

Q:\S-U\SPE\2013-200.00\AutoCAD\Final\es0002.dwg
Wayne Sicora 6/9/2014 3:59 PM
I.G. ES0002.DWG

Annova LNG Common Infrastructure, LLC
SWG-2015-00110
Brownsville Ship Channel and Wetlands, Cameron County, Texas. Sheet 7 of 40.

NOV 2 9 2018

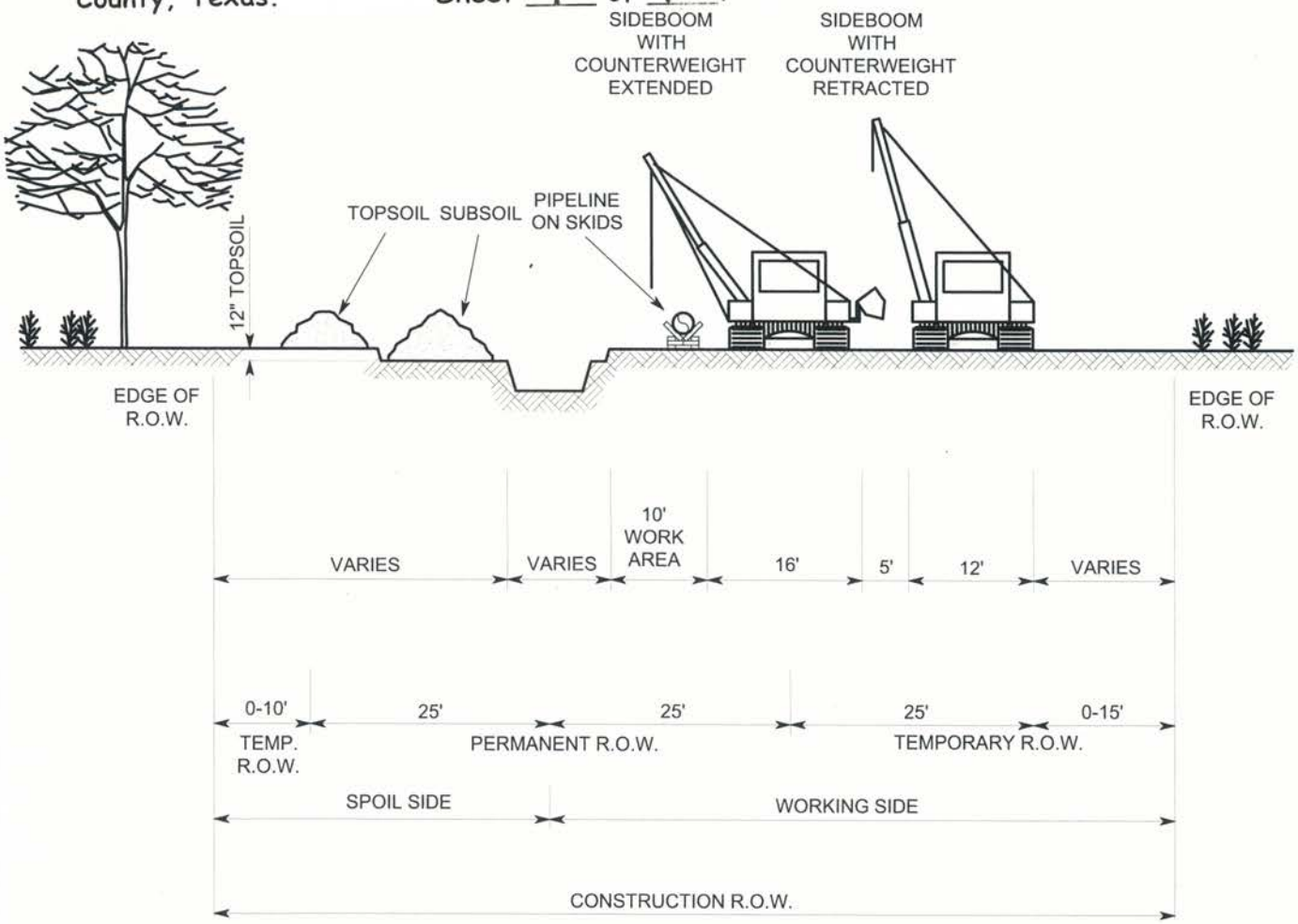

PIPE DIAMETER	SPOIL SIDE (FT.)	WORKING SIDE (FT.)	CONSTRUCTION R.O.W. (FT.)
12" OR LESS	25	50	75
14" - 30"	35	50	85
36" - 42"	35	65	100
WETLANDS	25	50	75

NOTES:

1. ALTHOUGH THE DIMENSIONS SHOWN ARE TYPICAL, SOME VARIATIONS MAY EXIST DUE TO SITE SPECIFIC CONDITIONS. UNLESS OTHERWISE INDICATED ON THE ALIGNMENT SHEETS, THE MAXIMUM WIDTH OF THE CONSTRUCTION RIGHT-OF-WAY SHALL BE AS SHOWN IN THE TABLE FOR THE APPROPRIATE PIPE DIAMETER.

2. TOPSOIL SEGREGATION METHODS WILL BE USED IN ALL RESIDENTIAL AREAS AND WHEN THE CONSTRUCTION ROW IS WIDER THAN 30 FEET IN CULTIVATED OR ROTATED AGRICULTURAL LANDS, MANAGED PASTURES, HAYFIELDS, AND OTHER AREAS AT THE LANDOWNER'S OR LAND MANAGEMENT AGENCY'S REQUEST. FOR WETLANDS, SEGREGATE THE TOP 12 INCHES OF TOPSOIL WITHIN THE DITCH LINE, EXCEPT IN AREAS WHERE STANDING WATER IS PRESENT OR SOILS ARE SATURATED.

TYPICAL CONSTRUCTION WIDTHS ACQUIRING NEW PERMANENT RIGHT-OF-WAY

FIGURE CW-3

DWG. ES-0003 REV.

Q:\S-U\SPE\2013-200.00\AutoCAD\Final\es0003.dwg

Wayne Sicora 5/28/2014 11:44 AM

I.G. ES0003.DWG

NOV 2 3 2018

Annova LNG Common Infrastructure, LLC
SWG-2015-00110
Brownsville Ship Channel and Wetlands, Cameron County, Texas.

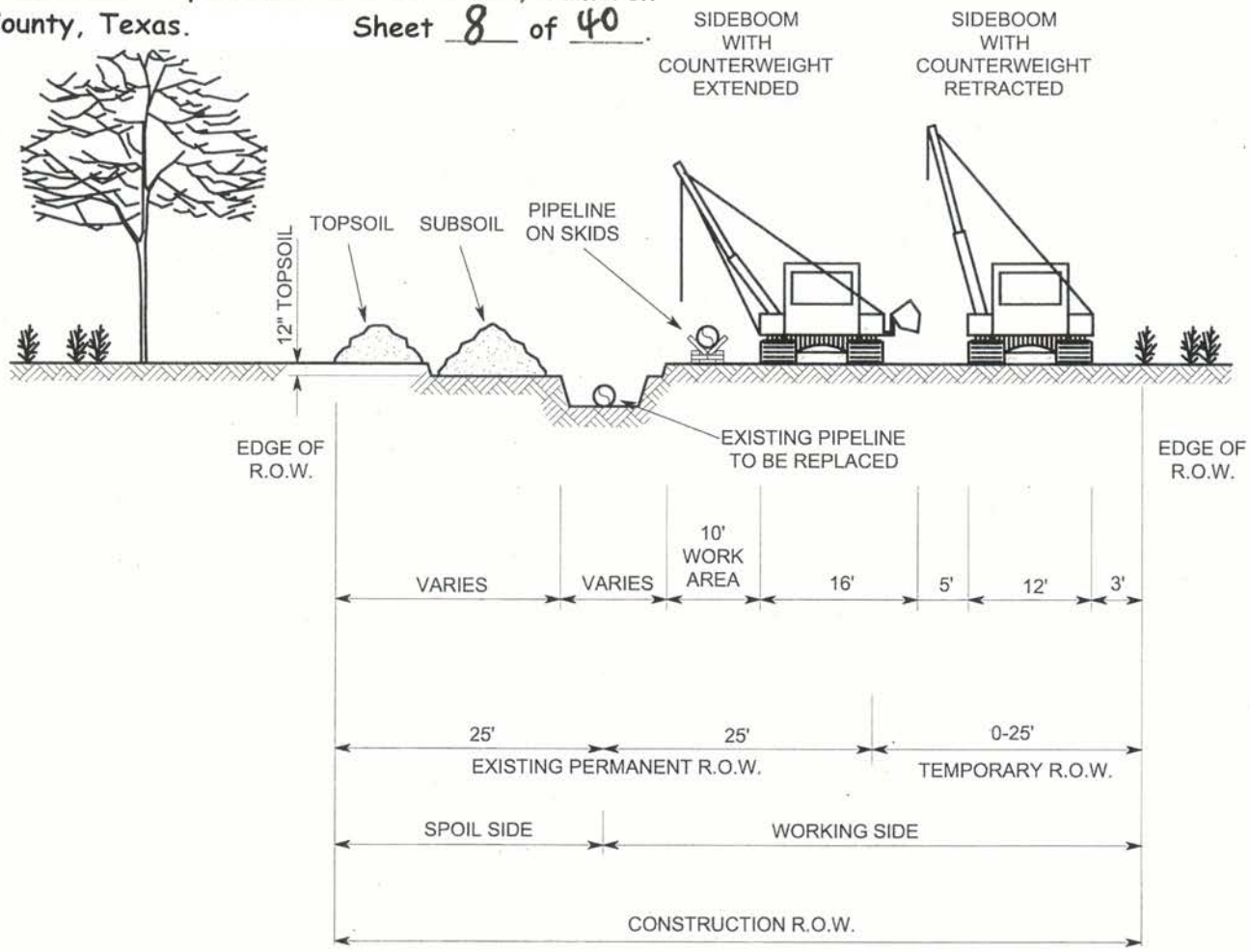

PIPE DIAMETER	SPOIL SIDE (FT.)	WORKING SIDE (FT.)	CONSTRUCTION R.O.W. (FT.)
12" OR LESS	25	25	50
14" - 30"	25	50	75
36" - 42"	25	50	75
WETLANDS	25	50	75

NOTES:

1. ALTHOUGH THE DIMENSIONS SHOWN ARE TYPICAL, SOME VARIATIONS MAY EXIST DUE TO SITE SPECIFIC CONDITIONS. UNLESS OTHERWISE INDICATED ON THE ALIGNMENT SHEETS, THE MAXIMUM WIDTH OF THE CONSTRUCTION RIGHT-OF-WAY SHALL BE AS SHOWN IN THE TABLE FOR THE APPROPRIATE PIPE DIAMETER.
2. TOPSOIL SEGREGATION METHODS WILL BE USED IN ALL RESIDENTIAL AREAS AND WHEN THE CONSTRUCTION ROW IS WIDER THAN 30 FEET IN CULTIVATED OR ROTATED AGRICULTURAL LANDS, MANAGED PASTURES, HAYFIELDS, AND OTHER AREAS AT THE LANDOWNER'S OR LAND MANAGEMENT AGENCY'S REQUEST. FOR WETLANDS, SEGREGATE THE TOP 12 INCHES OF TOPSOIL WITHIN THE DITCH LINE, EXCEPT IN AREAS WHERE STANDING WATER IS PRESENT OR SOILS ARE SATURATED.
3. IF THE WORKING SIDE MUST BE GREATER THAN THE VALUES SHOWN IN THE TABLE, COMPANY MUST REQUEST APPROVAL FROM THE F.E.R.C.

TYPICAL CONSTRUCTION WIDTHS NOT ACQUIRING NEW PERMANENT RIGHT-OF-WAY (SINGLE LINE SYSTEM)

FIGURE CW-4

DWG. ES-0004 REV.

Q:\S-U\SPE\2013-200.00\AutoCAD\Final\es0004.dwg
Wayne Sicora 5/28/2014 11:46 AM
I.G. ES0004.DWG

NOV 2 3 2018

Annova LNG Common Infrastructure, LLC
SWG-2015-00110
Brownsville Ship Channel and Wetlands, Cameron County, Texas.
Sheet 9 of 40.

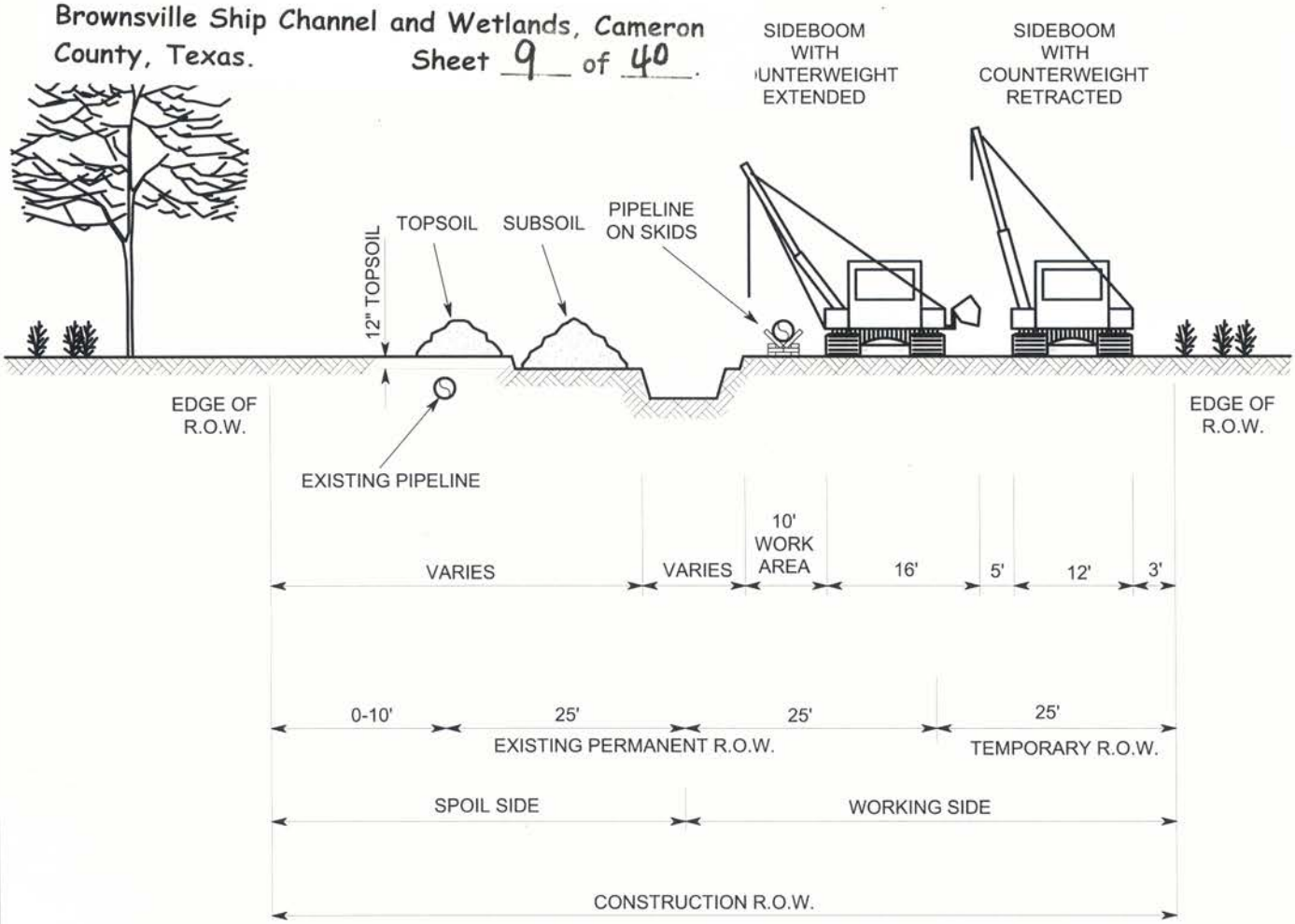

PIPE DIAMETER	SPOIL SIDE (FT.)	WORKING SIDE (FT.)	CONSTRUCTION R.O.W. (FT.)
12" OR LESS	25	50	75
14" - 30"	35	50	85
36" - 42"	35	50	85
WETLANDS	25	50	75

NOTES:

1. ALTHOUGH THE DIMENSIONS SHOWN ARE TYPICAL, SOME VARIATIONS MAY EXIST DUE TO SITE SPECIFIC CONDITIONS. UNLESS OTHERWISE INDICATED ON THE ALIGNMENT SHEETS, THE MAXIMUM WIDTH OF THE CONSTRUCTION RIGHT-OF-WAY SHALL BE AS SHOWN IN THE TABLE FOR THE APPROPRIATE PIPE DIAMETER.
2. TOPSOIL SEGREGATION METHODS WILL BE USED IN ALL RESIDENTIAL AREAS AND WHEN THE CONSTRUCTION ROW IS WIDER THAN 30 FEET IN CULTIVATED OR ROTATED AGRICULTURAL LANDS, MANAGED PASTURES, HAYFIELDS, AND OTHER AREAS AT THE LANDOWNER'S OR LAND MANAGEMENT AGENCY'S REQUEST. FOR WETLANDS, SEGREGATE THE TOP 12 INCHES OF TOPSOIL WITHIN THE DITCH LINE, EXCEPT IN AREAS WHERE STANDING WATER IS PRESENT OR SOILS ARE SATURATED.
3. IF THE WORKING SIDE MUST BE GREATER THAN 50 FEET (i.e. TEMPORARY WORKSPACE IS GREATER THAN 25 FEET), COMPANY MUST REQUEST APPROVAL FROM THE F.E.R.C.

TYPICAL CONSTRUCTION WIDTHS NOT ACQUIRING NEW PERMANENT RIGHT-OF-WAY (MULTIPLE LINE SYSTEM)

FIGURE CW-5

DWG. ES-0005 REV.

Q:\S-U\SPE\2013-200.00\AutoCAD\Final\es0005.dwg
Wayne Sicora 5/28/2014 11:47 AM
I.G. ES0005.DWG

DEC 13 2018

M:\Houston\Annova_LNG\Maps\Mxd\Nueces_Alignment\Annova_Lateral_LocationMap.mxd 12/13/2018

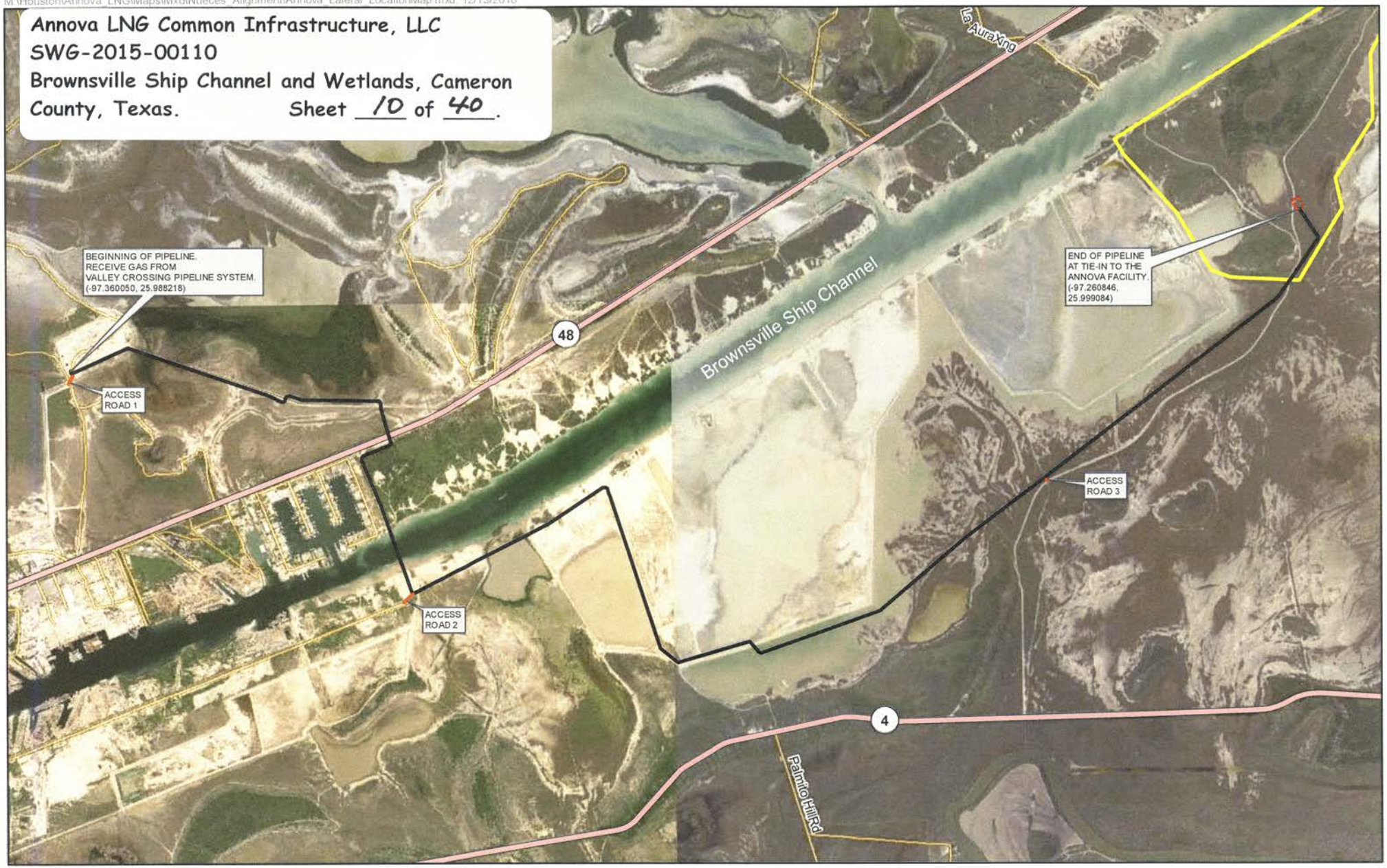

Proposed Centerline
Access Road
Annova Facility
Gas Meter Station
State Highway
Local Road

0 0.5 1
Miles

N

Figure 1-1
Location Map
Proposed Lateral

Annova LNG Common Infrastructure, LLC
SWG-2015-00110
Brownsville Ship Channel and Wetlands, Cameron County, Texas. Sheet 11 of 40.

NOV 2 3 2018

M:\Houston\Annova_LNG\Maps\Mxd\Nueces_Alignment\Annova_Lateral_Alignment_Index.mxd 11/19/2018

LEGEND
— PROPOSED CENTERLINE
SHEET MATCHLINE

0 1 2
Miles

N

SHEET INDEX

ALIGNMENT SHEET
PROPOSED LATERAL

M:\Houston\Annova_LNG\Maps\Mxd\Nueces_Alignment\Annova_Lateral_Alignment_v2.mxd; 12/14/2018

DEC 1 8 2018

BROWNSVILLE NAVIGATION DISTRICT

W-2 | W-2

LANDOWNER

ENVIRONMENT

PIPELINE ALIGNMENT

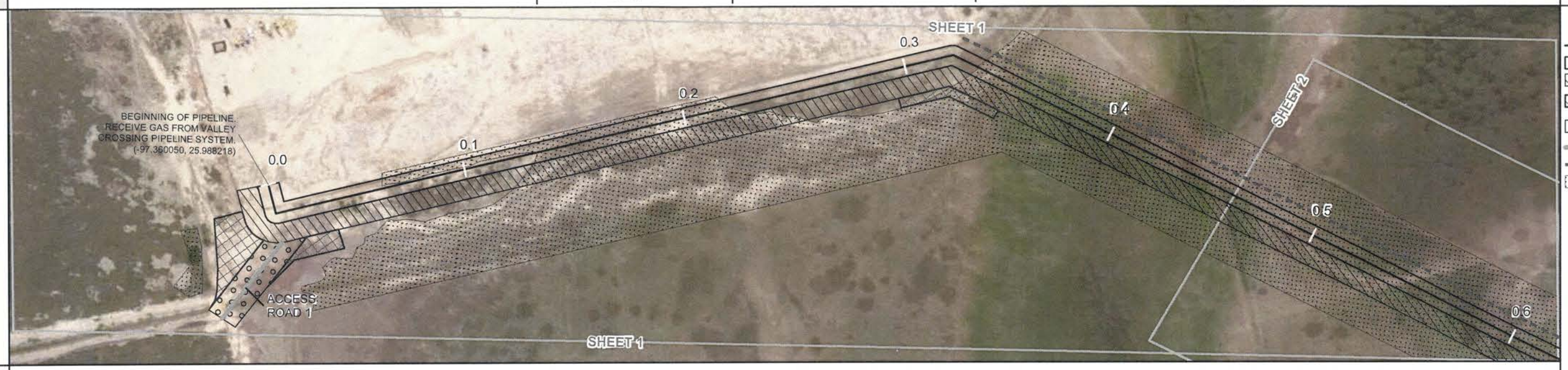

LEGEND

- PROPOSED CENTERLINE
- PERMANENT EASEMENT
- TEMPORARY WORKSPACE
- ADDITIONAL TEMPORARY WORKSPACE
- ADDITIONAL TEMPORARY WORKSPACE - ACCESS
- ACCESS ROAD
- VALLEY CROSSING PIPELINE
- WETLANDS

CROSSING INFO

Annova LNG Common Infrastructure, LLC
SWG-2015-00110
Brownsville Ship Channel and Wetlands, Cameron County, Texas. Sheet 12 of 40.

WORKSPACE

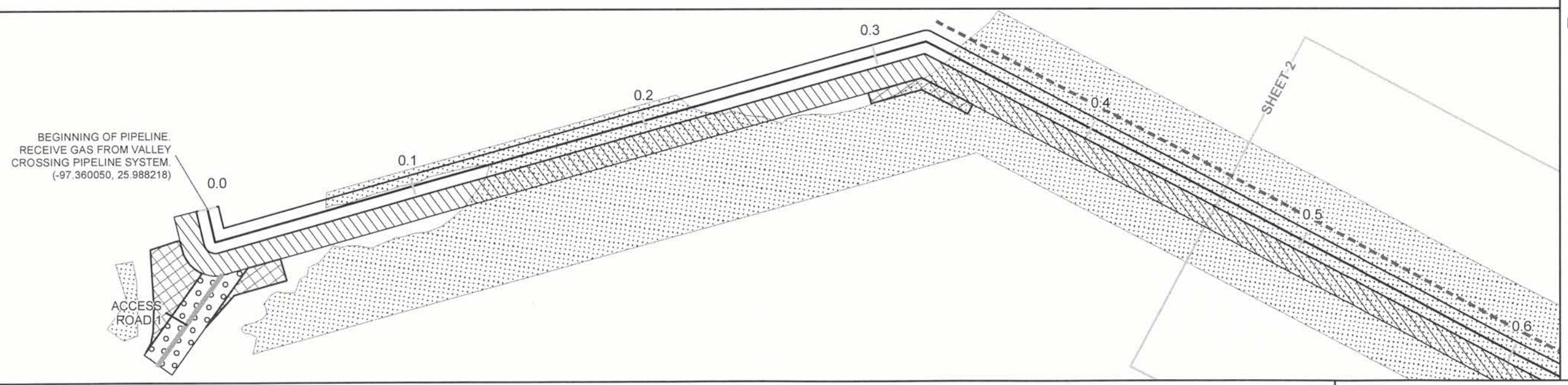

NOTES:

ENVIRONMENTAL KEY:
W - WETLAND
UF - UNCONSOLIDATED FLAT
OW - OPEN WATER

0 300 600 900 1,200
Feet

N

SHEET 1 OF 17

ALIGNMENT SHEET
PROPOSED LATERAL

M:\Houston\Annova_LNG\Maps\Mxd\Nueces_Alignment\Annova_Lateral_Alignment_v2.mxd 12/14/2018

DEC 1 8 2018

BROWNSVILLE NAVIGATION DISTRICT

LANDOWNER

W-2

ENVIRONMENT

PIPELINE ALIGNMENT

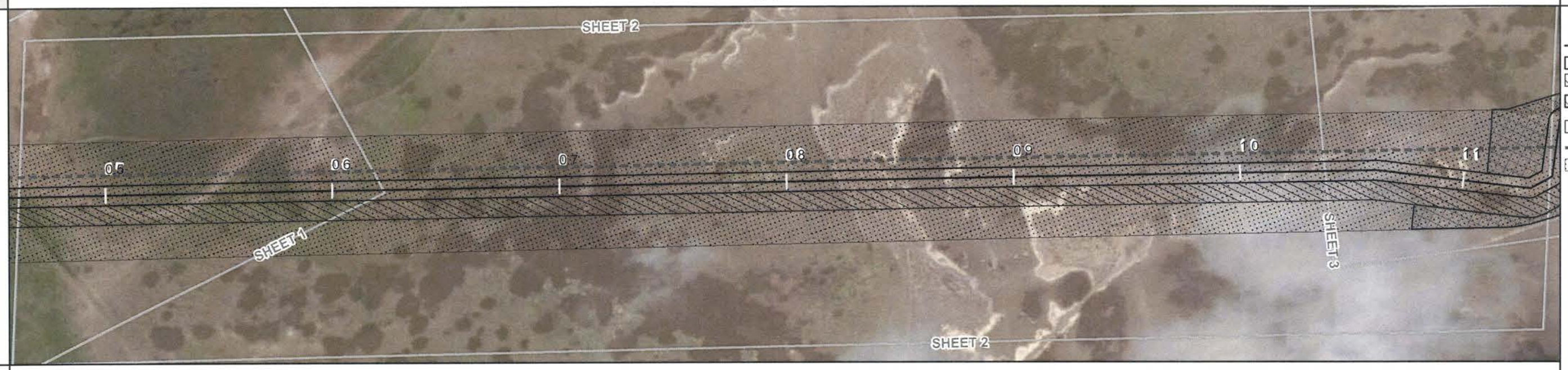

LEGEND

- PROPOSED CENTERLINE
- PERMANENT EASEMENT
- TEMPORARY WORKSPACE
- ADDITIONAL TEMPORARY WORKSPACE
- ADDITIONAL TEMPORARY WORKSPACE - ACCESS
- VALLEY CROSSING PIPELINE
- WETLANDS

CROSSING INFO

Annova LNG Common Infrastructure, LLC
SWG-2015-00110
Brownsville Ship Channel and Wetlands, Cameron County, Texas. Sheet 13 of 40.

WORKSPACE

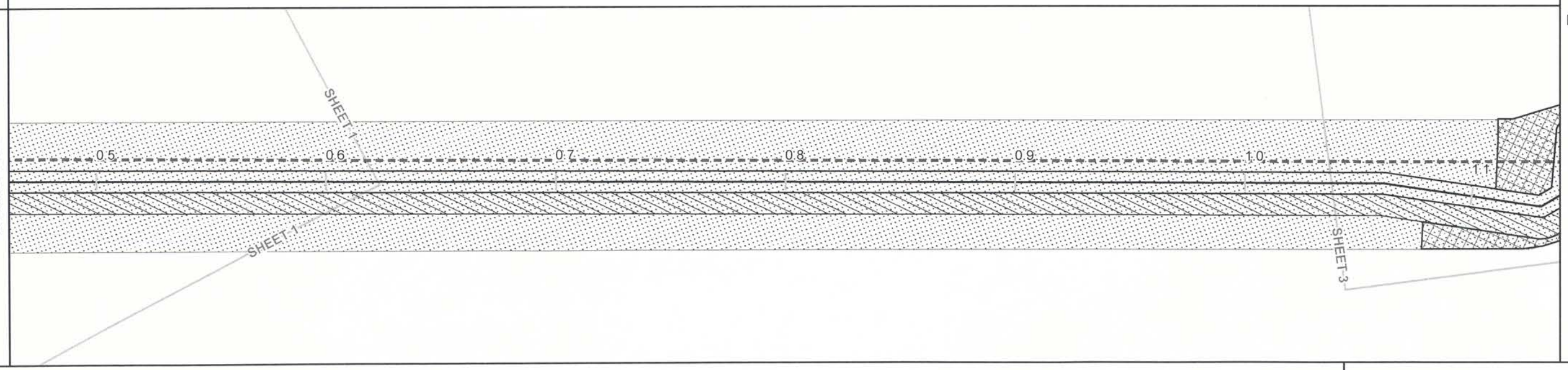

NOTES:

ENVIRONMENTAL KEY:
W - WETLAND
UF - UNCONSOLIDATED FLAT
OW - OPEN WATER

0 300 600 900 1,200
Feet

N

SHEET 2 OF 17

ALIGNMENT SHEET
PROPOSED LATERAL

DEC 18 2018

M:\Houston\Annova_LNG\Maps\Mxd\Nueces_Alignment\Annova_Lateral_Alignment_v2.mxd; 12/14/2018

BROWNSVILLE NAVIGATION DISTRICT

W-2

LANDOWNER

ENVIRONMENT

PIPELINE ALIGNMENT

LEGEND

- HORIZONTAL DIRECTIONAL DRILL BOREHOLE
- PROPOSED CENTERLINE
- PERMANENT EASEMENT
- TEMPORARY WORKSPACE
- ADDITIONAL TEMPORARY WORKSPACE
- ADDITIONAL TEMPORARY WORKSPACE - ACCESS
- VALLEY CROSSING PIPELINE
- WETLANDS

CROSSING INFO

42" VALLEY CROSSING PL

Annova LNG Common Infrastructure, LLC
SWG-2015-00110
Brownsville Ship Channel and Wetlands, Cameron County, Texas. Sheet 14 of 40.

42" VALLEY CROSSING PL

WORKSPACE

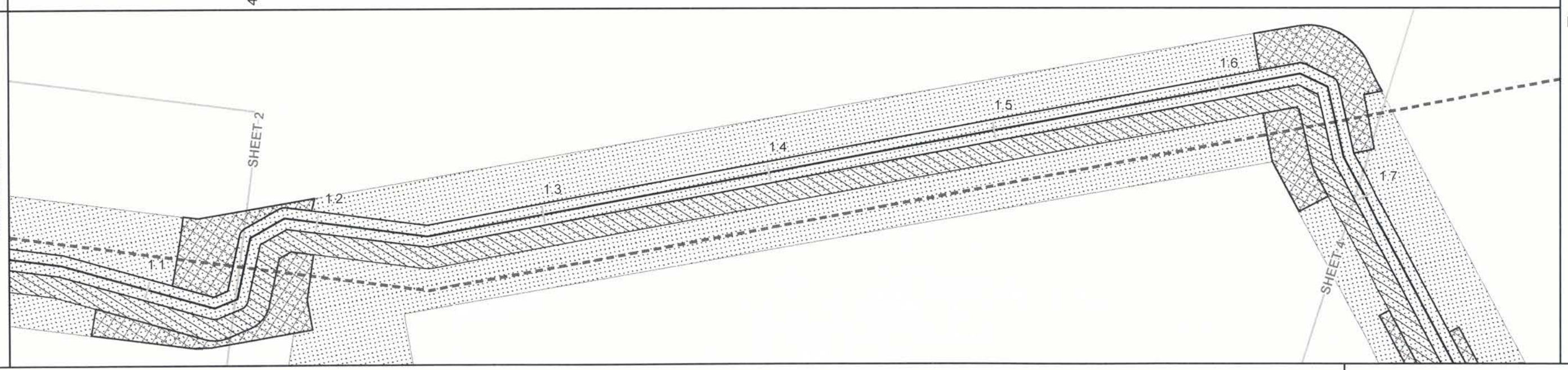

NOTES:

ENVIRONMENTAL KEY:
W - WETLAND
UF - UNCONSOLIDATED FLAT
OW - OPEN WATER

0 300 600 900 1,200
Feet

N

SHEET 3 OF 17

ALIGNMENT SHEET
PROPOSED LATERAL

DEC 1 8 2018

M:\Houston\Annova_LNG\Maps\Mxd\Nueces_Alignment\Annova_Lateral_Alignment_v2.mxd, 12/14/2018

BROWNSVILLE NAVIGATION DISTRICT	HWY 48 ROW (EST.)	BROWNSVILLE NAVIGATION DISTRICT	LANDOWNER
W-2	W-3		ENVIRONMENT

PIPELINE ALIGNMENT

LEGEND

- HORIZONTAL DIRECTIONAL DRILL BOREHOLE
- PROPOSED CENTERLINE
- PERMANENT EASEMENT
- TEMPORARY WORKSPACE
- ADDITIONAL TEMPORARY WORKSPACE
- ADDITIONAL TEMPORARY WORKSPACE - ACCESS
- VALLEY CROSSING PIPELINE
- WETLANDS

CROSSING INFO

Annova LNG Common Infrastructure, LLC
SWG-2015-00110
Brownsville Ship Channel and Wetlands, Cameron County, Texas. Sheet 15 of 40.

HIGHWAY 48

WORKSPACE

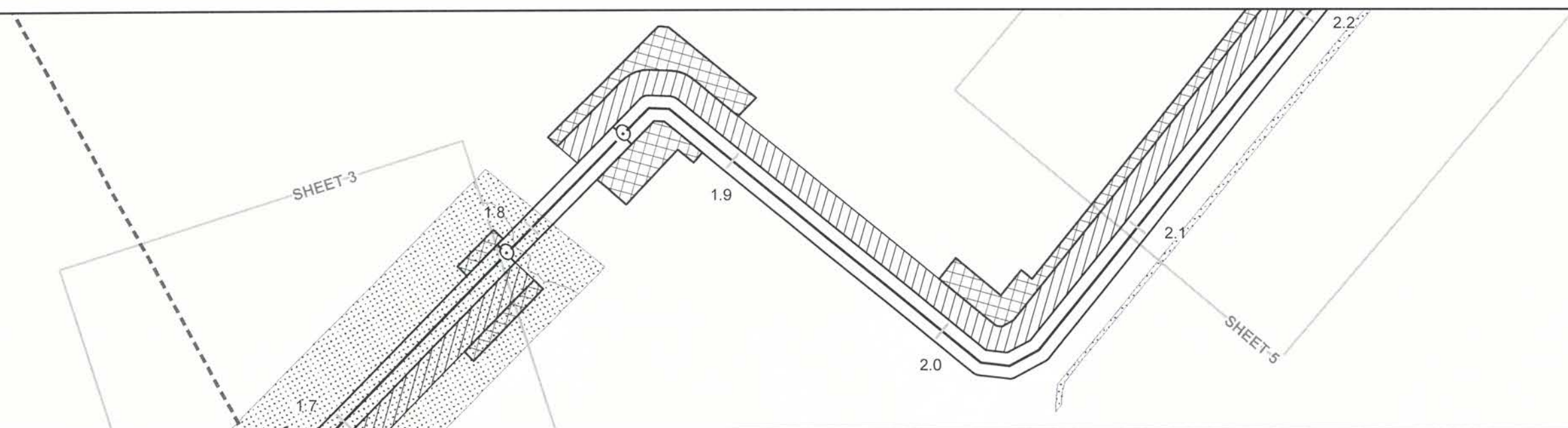

NOTES:

ENVIRONMENTAL KEY:
W - WETLAND
UF - UNCONSOLIDATED FLAT
OW - OPEN WATER

0 300 600 900 1,200
Feet

N

SHEET 4 OF 17

ALIGNMENT SHEET
PROPOSED LATERAL

M:\Houston\Annova_LNG\Maps\Mxd\Nueces_Alignment\Annova_Lateral_Alignment_v2.mxd, 12/14/2018

DEC 1 8 2018

BROWNSVILLE NAVIGATION DISTRICT	FEDERAL NAVIGATION CHANNEL	BROWNSVILLE NAVIGATION DISTRICT	LANDOWNER
W-4	OW-1	W-6 UF-1	ENVIRONMENT

PIPELINE ALIGNMENT

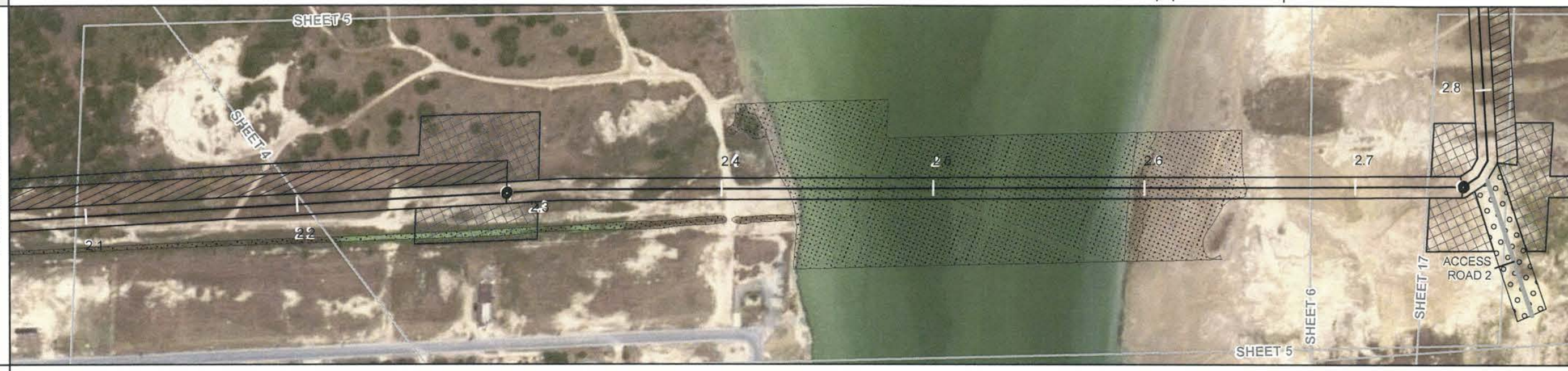

LEGEND
- HORIZONTAL DIRECTIONAL DRILL BOREHOLE
- PROPOSED CENTERLINE
- PERMANENT EASEMENT
- TEMPORARY WORKSPACE
- ADDITIONAL TEMPORARY WORKSPACE
- ADDITIONAL TEMPORARY WORKSPACE - ACCESS
- ACCESS ROAD
- WETLANDS

CROSSING INFO

Annova LNG Common Infrastructure, LLC
SWG-2015-00110
Brownsville Ship Channel and Wetlands, Cameron County, Texas. Sheet 16 of 40.

BROWNSVILLE SHIP CHANNEL

WORKSPACE

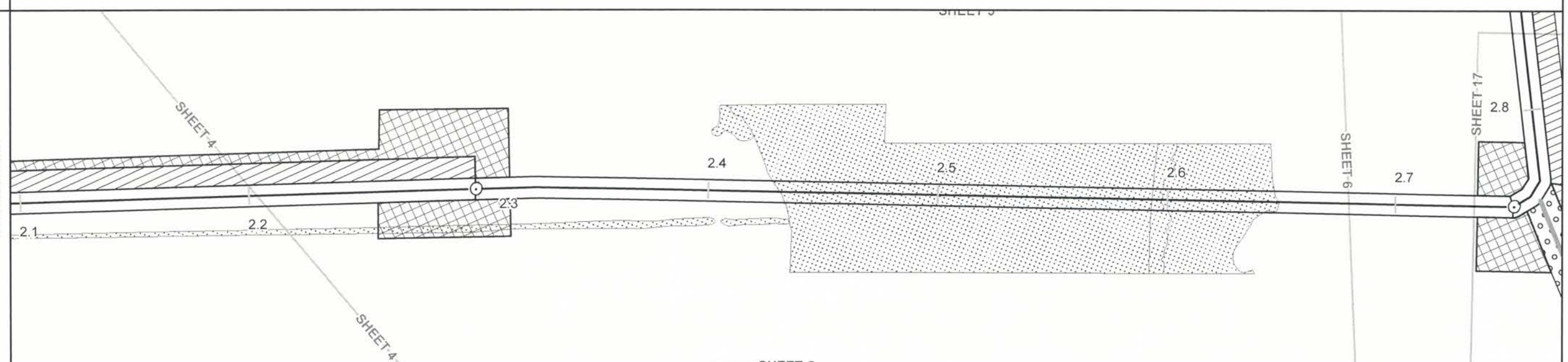

NOTES:

ENVIRONMENTAL KEY:
W - WETLAND
UF - UNCONSOLIDATED FLAT
OW - OPEN WATER

0 300 600 900 1,200
Feet

N

SHEET 5 OF 17

ALIGNMENT SHEET
PROPOSED LATERAL

M:\Houston\Annova_LNG\Maps\Mxd\Nueces_Alignment\Annova_Lateral_Alignment_v2.mxd 12/14/2018

DEC 1 8 2018

BROWNSVILLE NAVIGATION DISTRICT

LANDOWNER

W-9 | UF-2 | W-10 | UF-2 | W-11

ENVIRONMENT

PIPELINE ALIGNMENT

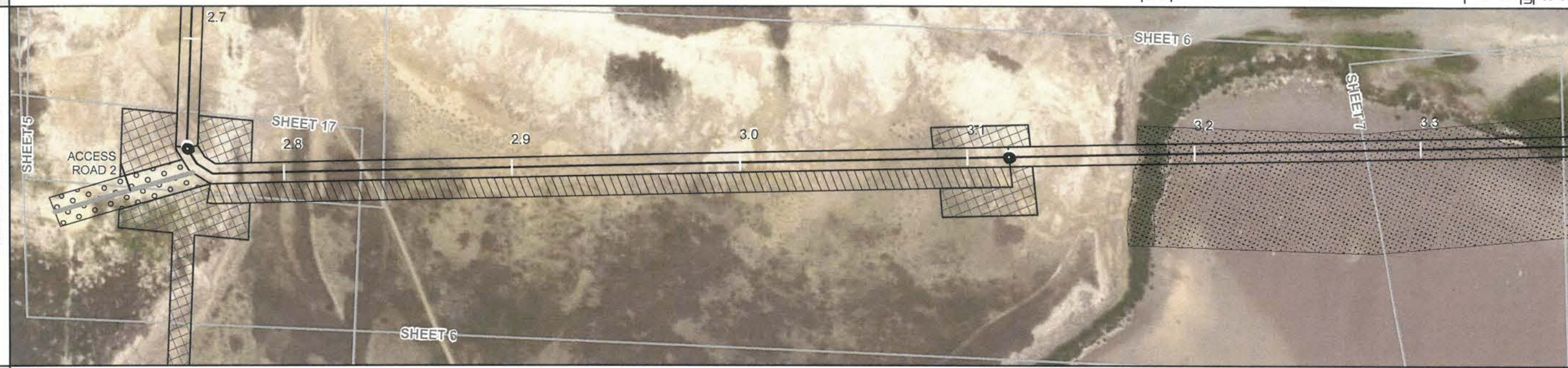

LEGEND

- HORIZONTAL DIRECTIONAL DRILL BOREHOLE
- PROPOSED CENTERLINE
- PERMANENT EASEMENT
- TEMPORARY WORKSPACE
- ADDITIONAL TEMPORARY WORKSPACE
- ADDITIONAL TEMPORARY WORKSPACE - ACCESS
- ACCESS ROAD
- WETLANDS

CROSSING INFO

SEE SHEET 17 FOR ACCESS ROAD AND HDD PIPE STRINGING PULLBACK AREA

Annova LNG Common Infrastructure, LLC
SWG-2015-00110
Brownsville Ship Channel and Wetlands, Cameron County, Texas.
Sheet 17 of 40.

WORKSPACE

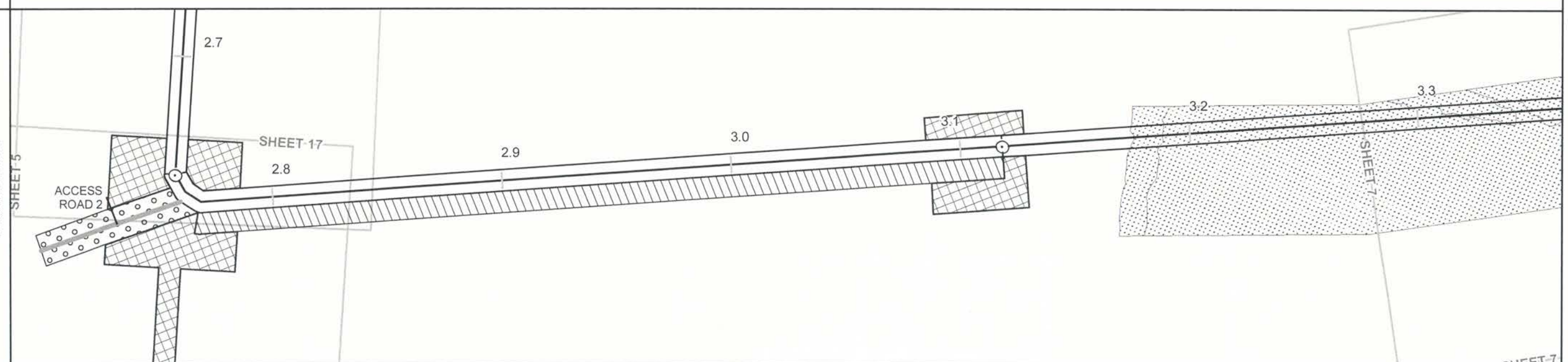

NOTES:

ENVIRONMENTAL KEY:
W - WETLAND
UF - UNCONSOLIDATED FLAT
OW - OPEN WATER

0 300 600 900 1,200
Feet

N

SHEET 6 OF 17

ALIGNMENT SHEET
PROPOSED LATERAL

DEC 1 8 2018

M:\Houston\Annova_LNG\Maps\Mxd\Nueces_Alignment\Annova_Lateral_Alignment_v2.mxd: 12/14/2018

BROWNSVILLE NAVIGATION DISTRICT

USACE/BND DREDGE MATERIAL PLACEMENT AREA

LANDOWNER

ENVIRONMENT

UF-2 | W-10 | UF-2 | W-11 | UF-2 | W-11

PIPELINE ALIGNMENT

LEGEND

- HORIZONTAL DIRECTIONAL DRILL BOREHOLE
- PROPOSED CENTERLINE
- PERMANENT EASEMENT
- TEMPORARY WORKSPACE
- ADDITIONAL TEMPORARY WORKSPACE
- ADDITIONAL TEMPORARY WORKSPACE - ACCESS
- WETLANDS

CROSSING INFO

Annova LNG Common Infrastructure, LLC
SWG-2015-00110
Brownsville Ship Channel and Wetlands, Cameron County, Texas.
Sheet 18 of 40.

WORKSPACE

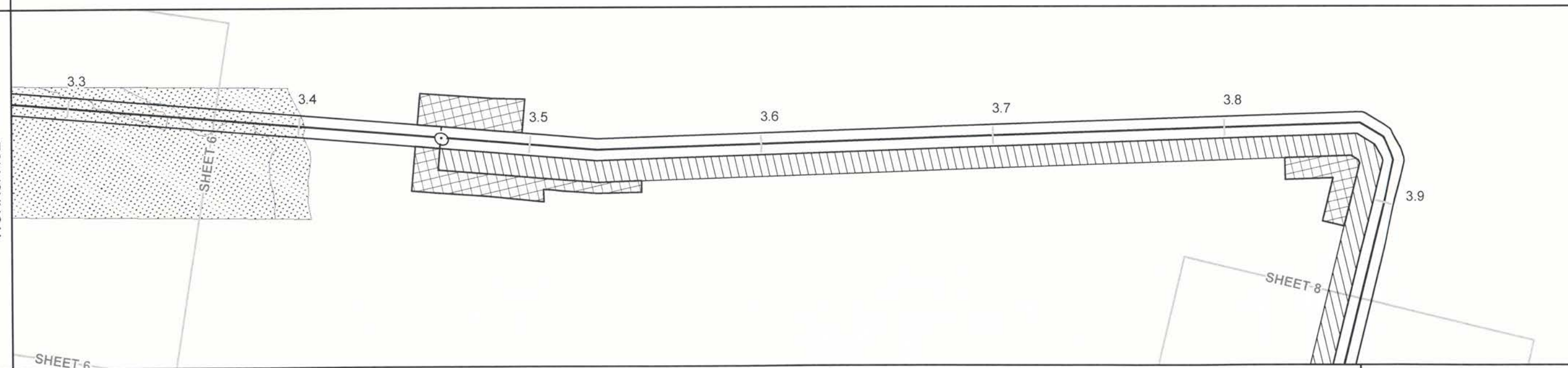

NOTES:

ENVIRONMENTAL KEY:
W - WETLAND
UF - UNCONSOLIDATED FLAT
OW - OPEN WATER

0 300 600 900 1,200
Feet

N

SHEET 7 OF 17

ALIGNMENT SHEET
PROPOSED LATERAL

M:\Houston\Annova_LNG\Maps\Mxd\Nueces_Alignment\Annova_Lateral_Alignment_v2.mxd 12/14/2018

DEC 1 8 2018

USACE/BND DREDGE MATERIAL PLACEMENT AREA

LANDOWNER

ENVIRONMENT

PIPELINE ALIGNMENT

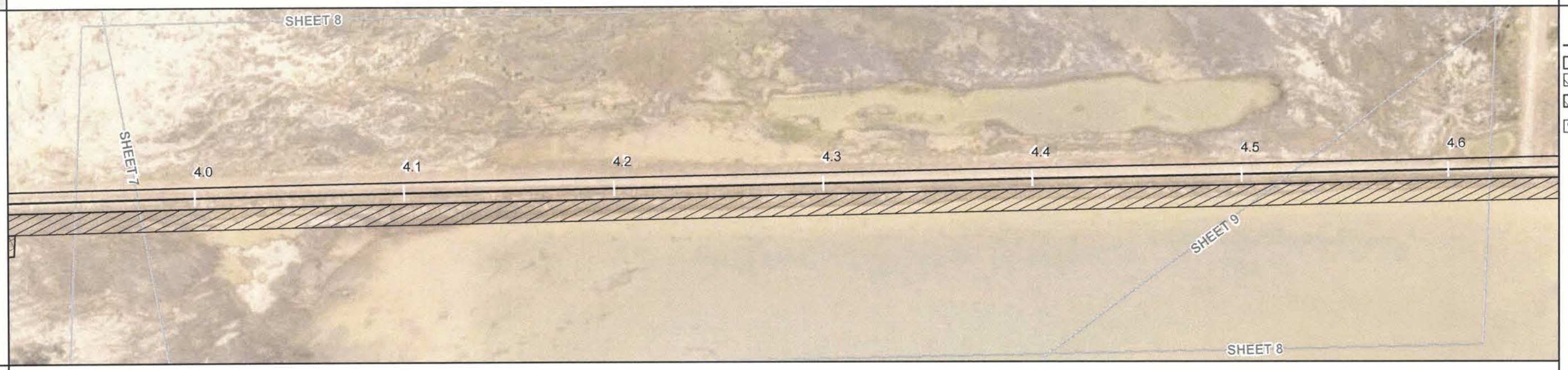

LEGEND

- PROPOSED CENTERLINE
- PERMANENT EASEMENT
- TEMPORARY WORKSPACE
- ADDITIONAL TEMPORARY WORKSPACE
- ADDITIONAL TEMPORARY WORKSPACE - ACCESS

CROSSING INFO

Annova LNG Common Infrastructure, LLC
SWG-2015-00110
Brownsville Ship Channel and Wetlands, Cameron County, Texas.
Sheet 19 of 40.

WORKSPACE

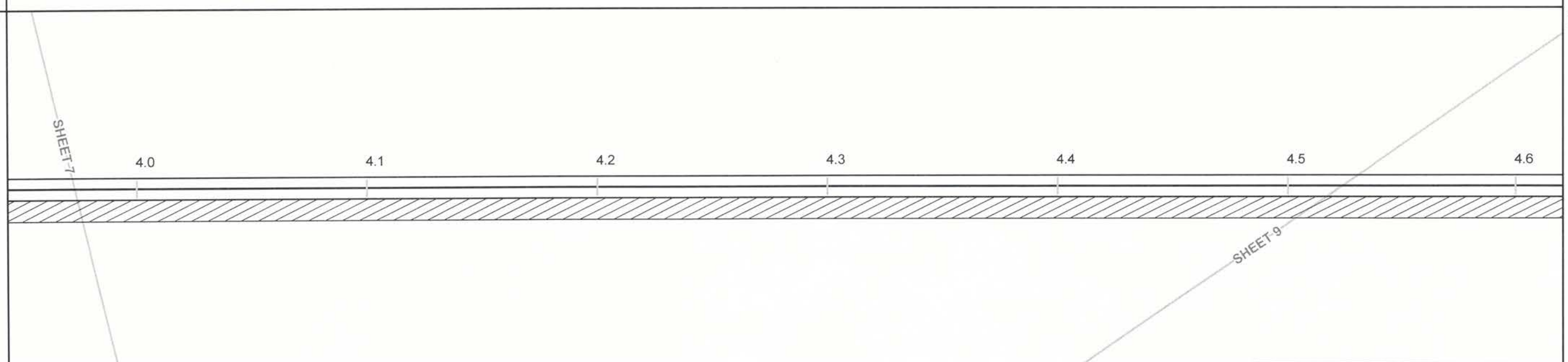

NOTES:

ENVIRONMENTAL KEY:
W - WETLAND
UF - UNCONSOLIDATED FLAT
OW - OPEN WATER

0 300 600 900 1,200
Feet

N

SHEET 8 OF 17

ALIGNMENT SHEET
PROPOSED LATERAL

DEC 1 8 2018

M:\Houston\Annova_LNG\Maps\Mxd\Nueces_Alignment\Annova_Lateral_Alignment_v2.mxd: 12/14/2018

USACE/BND DREDGE MATERIAL PLACEMENT AREA	BROWNSVILLE NAVIGATION DISTRICT	USACE/BND DREDGE MATERIAL PLACEMENT AREA	LANDOWNER
			ENVIRONMENT

PIPELINE ALIGNMENT

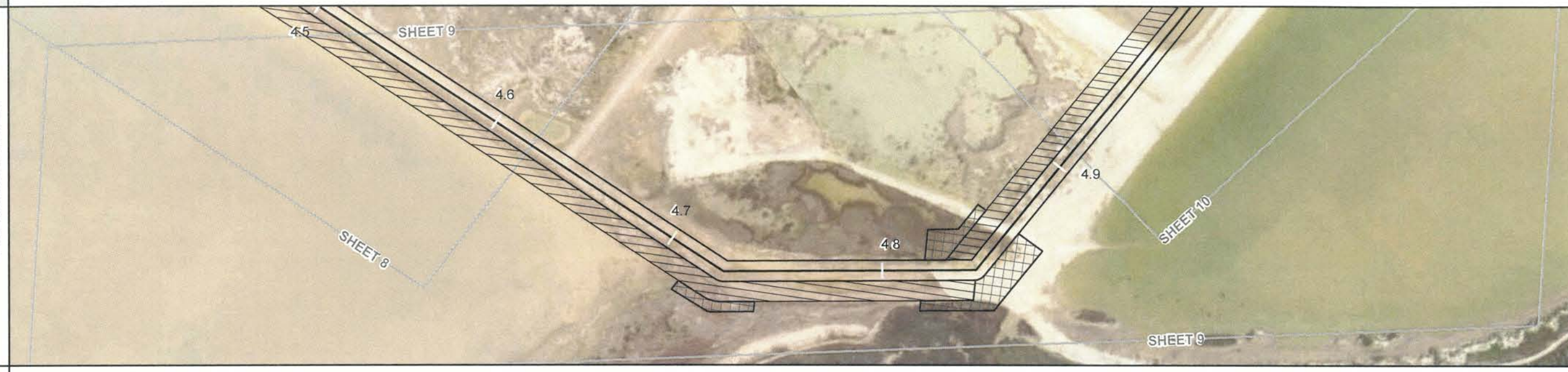

LEGEND
- PROPOSED CENTERLINE
- PERMANENT EASEMENT
- TEMPORARY WORKSPACE
- ADDITIONAL TEMPORARY WORKSPACE
- ADDITIONAL TEMPORARY WORKSPACE - ACCESS

CROSSING INFO

Annova LNG Common Infrastructure, LLC
SWG-2015-00110
Brownsville Ship Channel and Wetlands, Cameron County, Texas. Sheet 20 of 40.

WORKSPACE

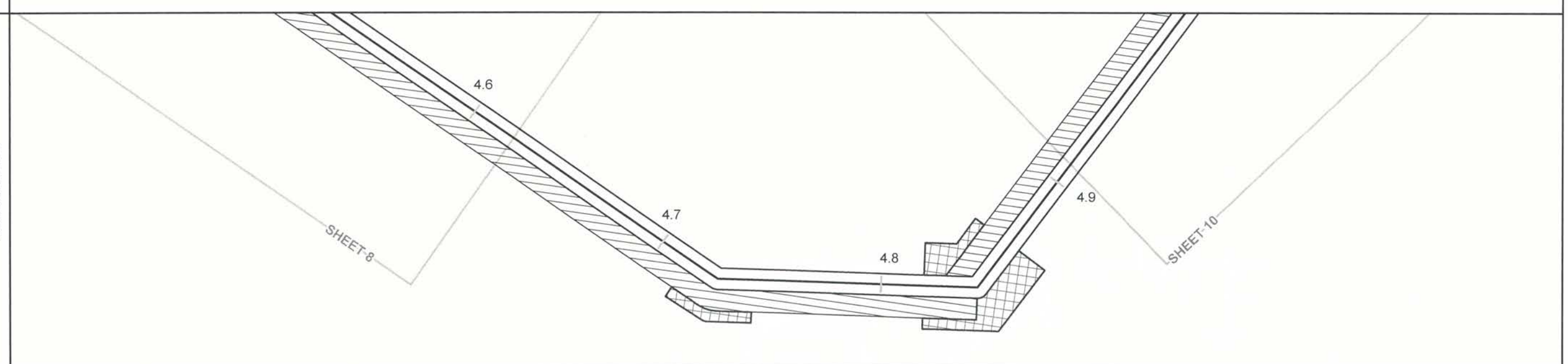

NOTES:

ENVIRONMENTAL KEY:
W - WETLAND
UF - UNCONSOLIDATED FLAT
OW - OPEN WATER

0 300 600 900 1,200
Feet

N

SHEET 9 OF 17

ALIGNMENT SHEET
PROPOSED LATERAL

M:\Houston\Annova_LNG\Maps\Mxd\Nueces_Alignment\Annova_Lateral_Alignment_v2.mxd 12/14/2018

DEC 1 8 2018

USACE/BND DREDGE MATERIAL PLACEMENT AREA	BROWNSVILLE NAVIGATION DISTRICT	LANDOWNER
	UF-3	ENVIRONMENT

PIPELINE ALIGNMENT

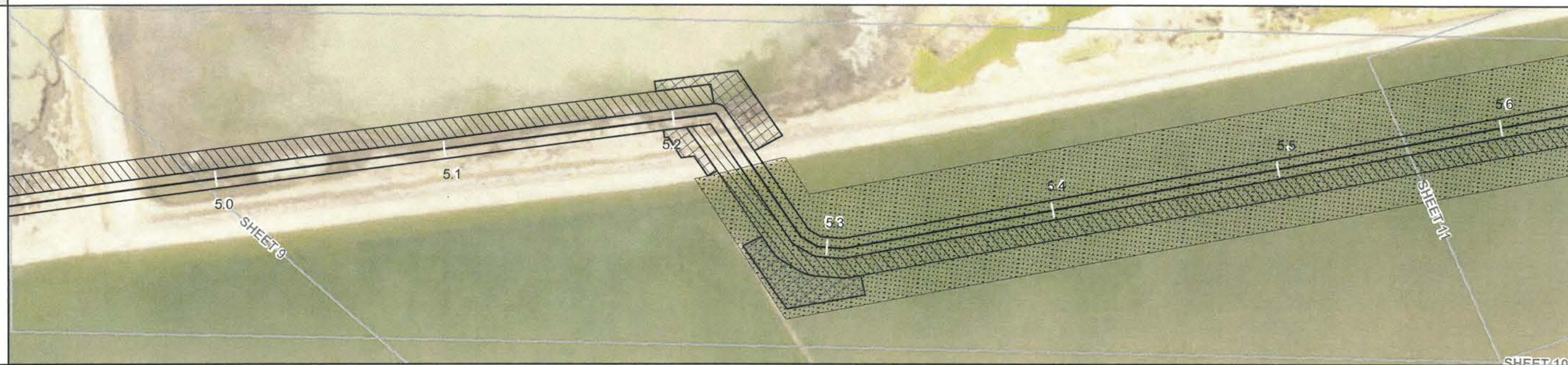

LEGEND
- PROPOSED CENTERLINE
- PERMANENT EASEMENT
- TEMPORARY WORKSPACE
- ADDITIONAL TEMPORARY WORKSPACE
- ADDITIONAL TEMPORARY WORKSPACE - ACCESS
- WETLANDS

CROSSING INFO

Annova LNG Common Infrastructure, LLC
SWG-2015-00110
Brownsville Ship Channel and Wetlands, Cameron County, Texas.
Sheet 21 of 40.

WORKSPACE

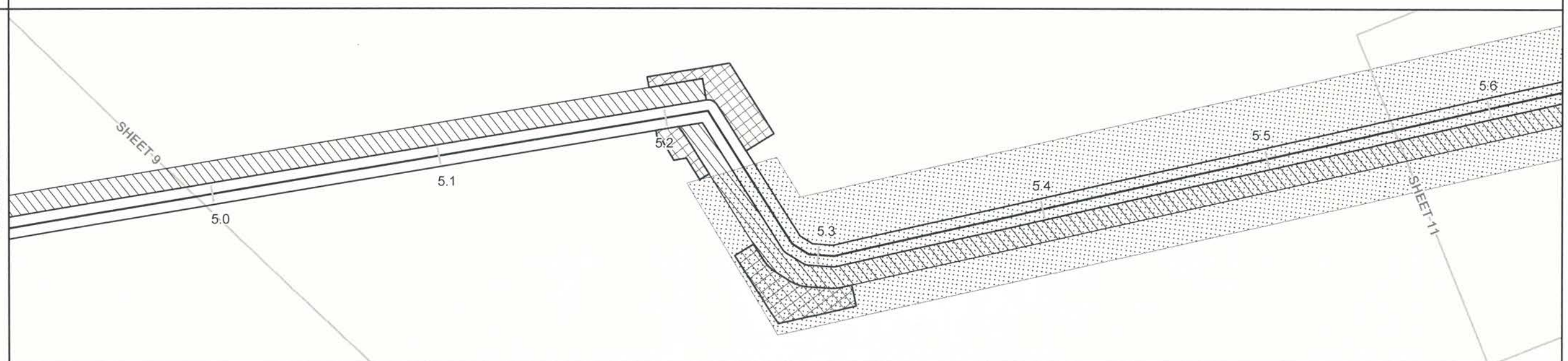

NOTES:

ENVIRONMENTAL KEY:
W - WETLAND
UF - UNCONSOLIDATED FLAT
OW - OPEN WATER

0 300 600 900 1,200
Feet

N

SHEET 10 OF 17

ALIGNMENT SHEET
PROPOSED LATERAL

M:\Houston\Annova_LNG\Maps\Mxd\Nueces_Alignment\Annova_Lateral_Alignment_v2.mxd 12/14/2018

DEC 1 8 2018

BROWNSVILLE NAVIGATION DISTRICT

UF-3 | W-12 | W-14

LANDOWNER

ENVIRONMENT

PIPELINE ALIGNMENT

LEGEND

- PROPOSED CENTERLINE
- PERMANENT EASEMENT
- TEMPORARY WORKSPACE
- ADDITIONAL TEMPORARY WORKSPACE
- ADDITIONAL TEMPORARY WORKSPACE - ACCESS
- WETLANDS

CROSSING INFO

Annova LNG Common Infrastructure, LLC
SWG-2015-00110
Brownsville Ship Channel and Wetlands, Cameron County, Texas. Sheet 22 of 40.

WORKSPACE

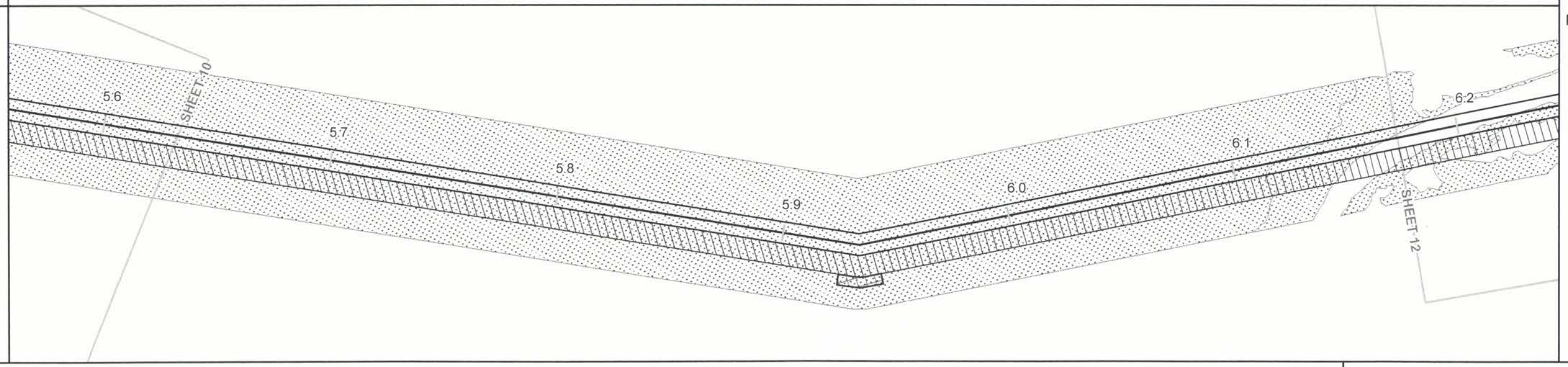

NOTES:

ENVIRONMENTAL KEY:
W - WETLAND
UF - UNCONSOLIDATED FLAT
OW - OPEN WATER

0 300 600 900 1,200
Feet

N

SHEET 11 OF 17

ALIGNMENT SHEET
PROPOSED LATERAL

M:\Houston\Annova_LNG\Maps\Mxd\Nueces_Alignment\Annova_Lateral_Alignment_v2.mxd 12/14/2018

DEC 1 8 2018

BROWNSVILLE NAVIGATION DISTRICT

LANDOWNER

W-14 | W-14 | W-14 | W-14 | W-14 | W-18 | W-24 | W-25 | W-26

ENVIRONMENT

PIPELINE ALIGNMENT

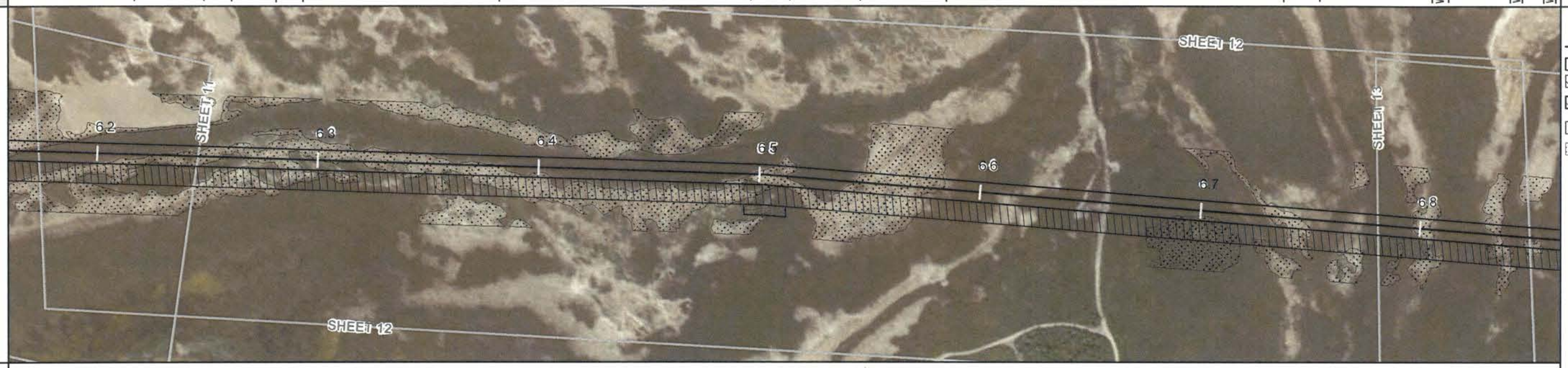

LEGEND

- PROPOSED CENTERLINE
- PERMANENT EASEMENT
- TEMPORARY WORKSPACE
- ADDITIONAL TEMPORARY WORKSPACE
- ADDITIONAL TEMPORARY WORKSPACE - ACCESS
- WETLANDS

CROSSING INFO

Annova LNG Common Infrastructure, LLC
SWG-2015-00110
Brownsville Ship Channel and Wetlands, Cameron County, Texas.
Sheet 23 of 40.

WORKSPACE

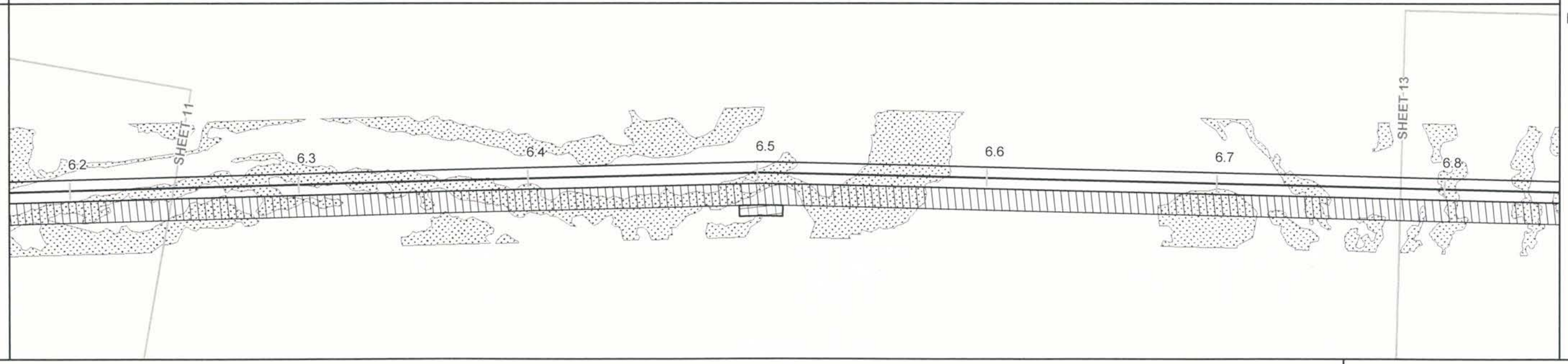

NOTES:

ENVIRONMENTAL KEY:
W - WETLAND
UF - UNCONSOLIDATED FLAT
OW - OPEN WATER

0 300 600 900 1,200
Feet

N

SHEET 12 OF 17

ALIGNMENT SHEET
PROPOSED LATERAL

DEC 1 8 2018

M:\Houston\Annova_LNG\Maps\Mxd\Nueces_Alignment\Annova_Lateral_Alignment_v2.mxd 12/14/2018

BROWNSVILLE NAVIGATION DISTRICT

LANDOWNER

ENVIRONMENT

W-24 | W-25 | W-26 | W-28 | W-30 | W-32 | W-33 | W-34

PIPELINE ALIGNMENT

LEGEND

- PROPOSED CENTERLINE
- PERMANENT EASEMENT
- TEMPORARY WORKSPACE
- ADDITIONAL TEMPORARY WORKSPACE
- ADDITIONAL TEMPORARY WORKSPACE - ACCESS
- ACCESS ROAD
- WETLANDS

CROSSING INFO

Annova LNG Common Infrastructure, LLC
SWG-2015-00110
Brownsville Ship Channel and Wetlands, Cameron County, Texas.
Sheet 24 of 40.

WORKSPACE

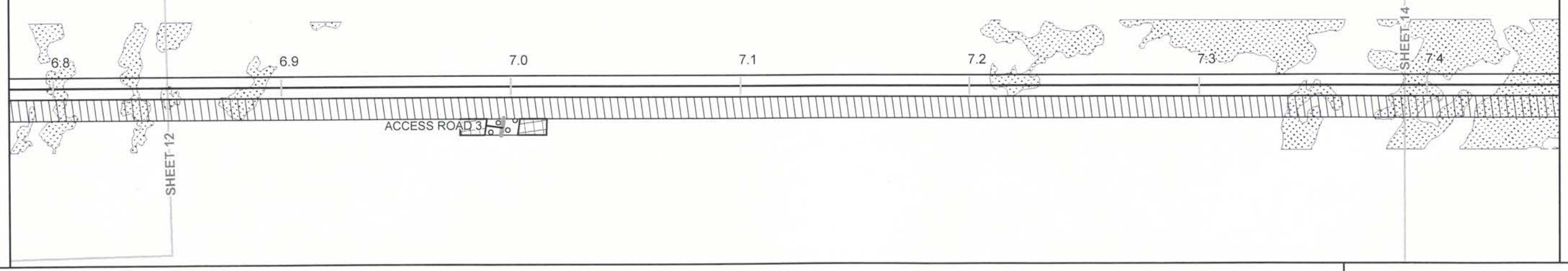

NOTES:

ENVIRONMENTAL KEY:
W - WETLAND
UF - UNCONSOLIDATED FLAT
OW - OPEN WATER

0 300 600 900 1,200
Feet

N

SHEET 13 OF 17

ALIGNMENT SHEET
PROPOSED LATERAL

M:\Houston\Annova_LNG\Maps\Mxd\Nueces_Alignment\Annova_Lateral_Alignment_v2.mxd 12/14/2018

DEC 1 8 2018

BROWNSVILLE NAVIGATION DISTRICT

LANDOWNER

ENVIRONMENT

W-33 | W-34 | W-36 | W-43 | W-45

PIPELINE ALIGNMENT

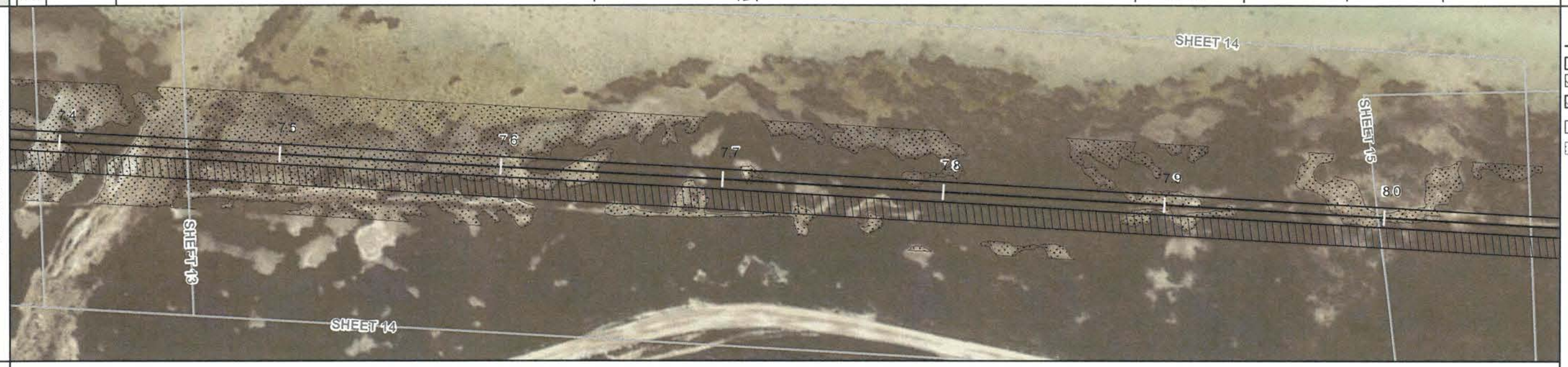

LEGEND

- PROPOSED CENTERLINE
- PERMANENT EASEMENT
- TEMPORARY WORKSPACE
- ADDITIONAL TEMPORARY WORKSPACE
- ADDITIONAL TEMPORARY WORKSPACE - ACCESS
- WETLANDS

CROSSING INFO

Annova LNG Common Infrastructure, LLC
SWG-2015-00110
Brownsville Ship Channel and Wetlands, Cameron County, Texas.
Sheet 25 of 40.

WORKSPACE

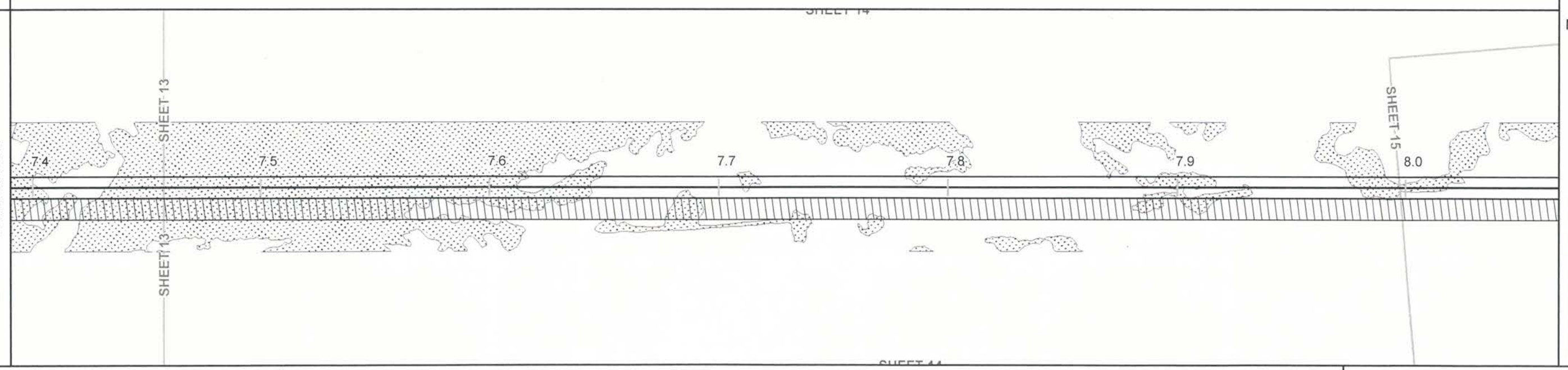

NOTES:

ENVIRONMENTAL KEY:
W - WETLAND
UF - UNCONSOLIDATED FLAT
OW - OPEN WATER

0 300 600 900 1,200
Feet

N

SHEET 14 OF 17

ALIGNMENT SHEET
PROPOSED LATERAL

DEC 1 8 2018

M:\Houston\Annova_LNG\Maps\Mxd\Nueces_Alignment\Annova_Lateral_Alignment_v2.mxd, 12/14/2018

	BROWNSVILLE NAVIGATION DISTRICT	ANNOVA TERMINAL	LANDOWNER
	W-45 | W-47	W-49	ENVIRONMENT

PIPELINE ALIGNMENT

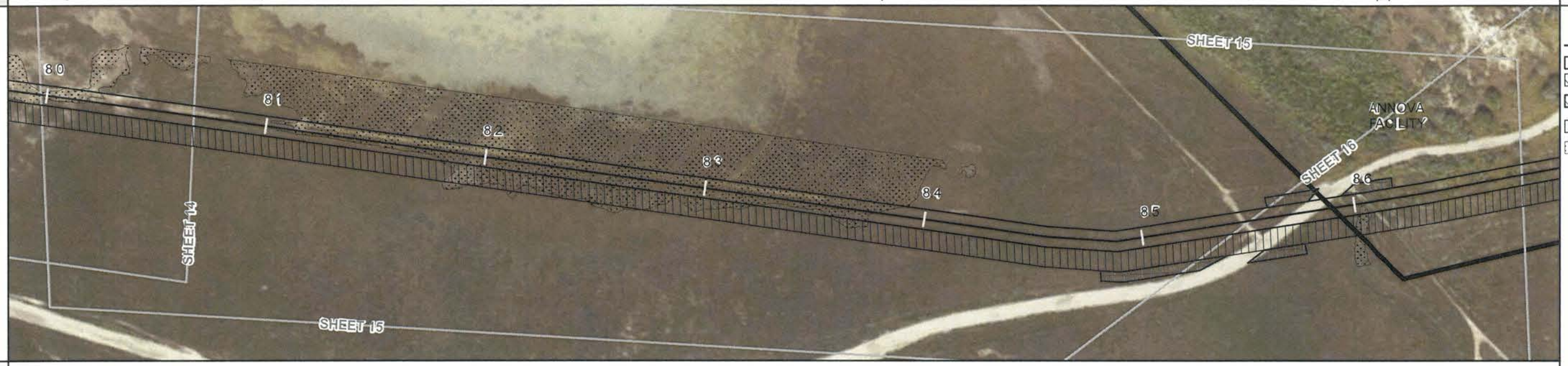

LEGEND
- PROPOSED CENTERLINE
- PERMANENT EASEMENT
- TEMPORARY WORKSPACE
- ADDITIONAL TEMPORARY WORKSPACE
- ADDITIONAL TEMPORARY WORKSPACE - ACCESS
- WETLANDS

CROSSING INFO

Annova LNG Common Infrastructure, LLC
SWG-2015-00110
Brownsville Ship Channel and Wetlands, Cameron County, Texas. Sheet 26 of 40.

WORKSPACE

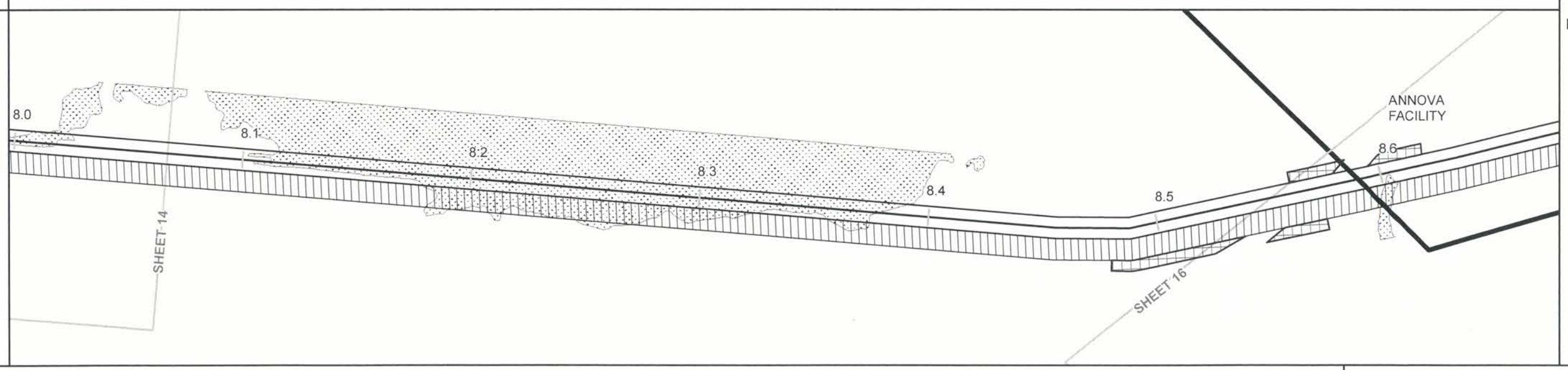

NOTES:

ENVIRONMENTAL KEY:
W - WETLAND
UF - UNCONSOLIDATED FLAT
OW - OPEN WATER

0 300 600 900 1,200
Feet

N

SHEET 15 OF 17

ALIGNMENT SHEET
PROPOSED LATERAL

M:\Houston\Annova_LNG\Maps\Mxd\Nueces_Alignment\Annova_Lateral_Alignment_v2.mxd 12/14/2018

DEC 1 8 2018

BROWNSVILLE NAVIGATION DISTRICT | ANNOVA TERMINAL

LANDOWNER

ENVIRONMENT

PIPELINE ALIGNMENT

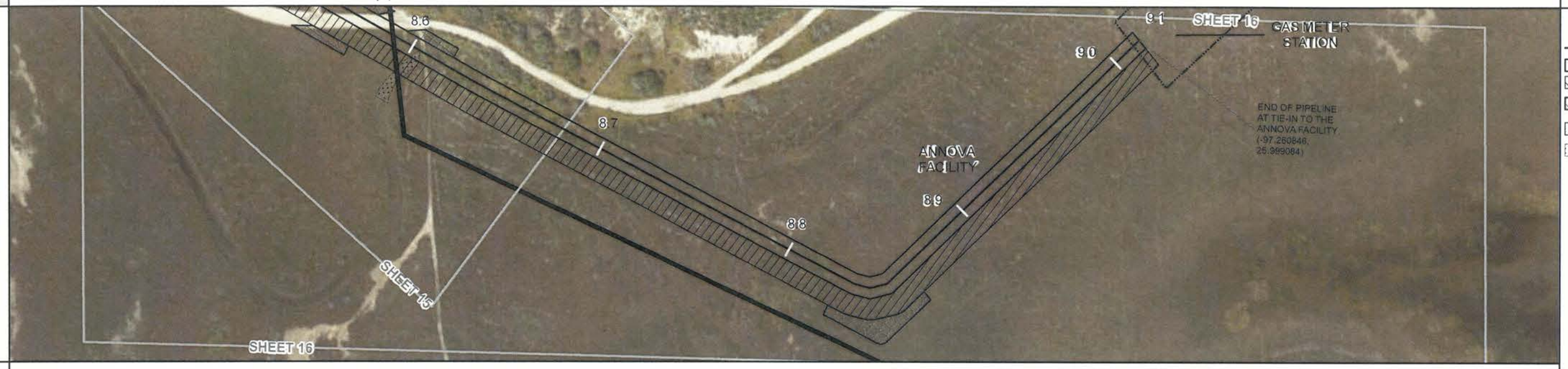

LEGEND

- PROPOSED CENTERLINE
- PERMANENT EASEMENT
- TEMPORARY WORKSPACE
- ADDITIONAL TEMPORARY WORKSPACE
- ADDITIONAL TEMPORARY WORKSPACE - ACCESS
- WETLANDS

CROSSING INFO

Annova LNG Common Infrastructure, LLC
SWG-2015-00110
Brownsville Ship Channel and Wetlands, Cameron County, Texas. Sheet 27 of 40.

WORKSPACE

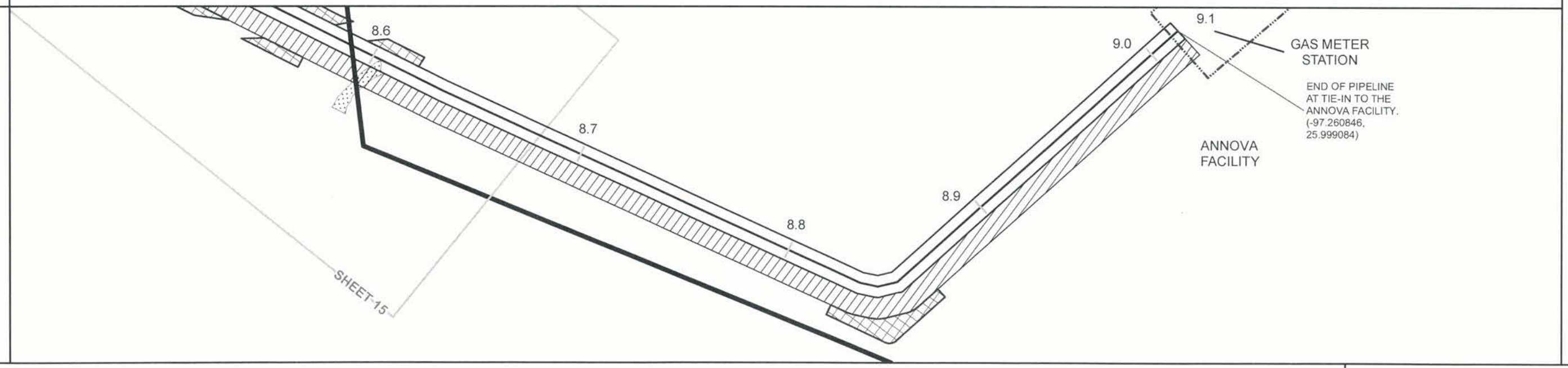

NOTES:

ENVIRONMENTAL KEY:
W - WETLAND
UF - UNCONSOLIDATED FLAT
OW - OPEN WATER

0 300 600 900 1,200
Feet

N

SHEET 16 OF 17

ALIGNMENT SHEET
PROPOSED LATERAL

M:\Houston\Annova_LNG\Maps\Mxd\Noecas_Alignment\Annova_Lateral_Alignment_v2.mxd 12/14/2018

DEC 18 2018

BROWNSVILLE NAVIGATION DISTRICT

LANDOWNER

ENVIRONMENT

PIPELINE ALIGNMENT

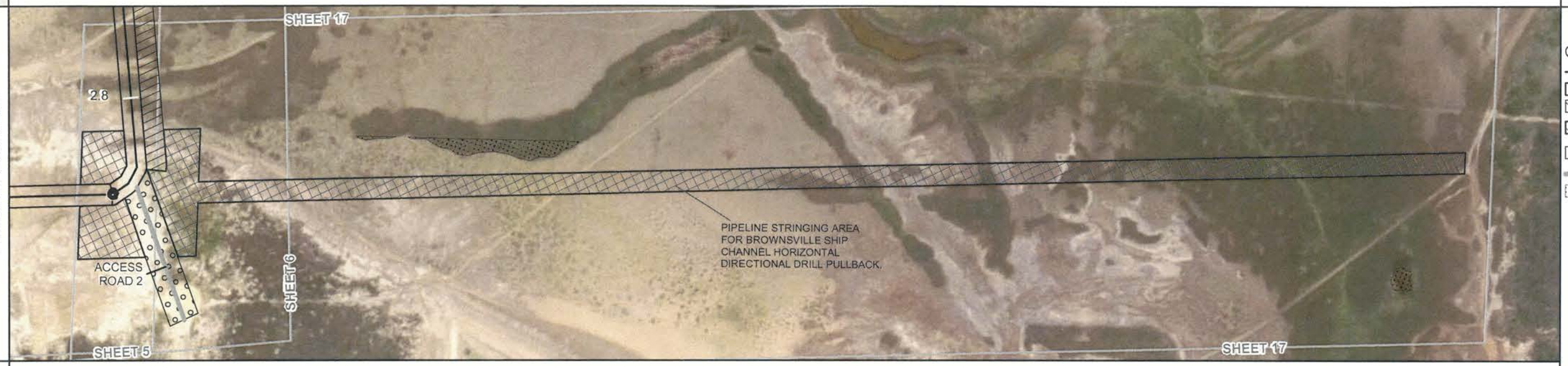

LEGEND

- HORIZONTAL DIRECTIONAL DRILL BOREHOLE
- PROPOSED CENTERLINE
- PERMANENT EASEMENT
- TEMPORARY WORKSPACE
- ADDITIONAL TEMPORARY WORKSPACE
- ADDITIONAL TEMPORARY WORKSPACE - ACCESS
- ACCESS ROAD
- WETLANDS

CROSSING INFO

Annova LNG Common Infrastructure, LLC
SWG-2015-00110
Brownsville Ship Channel and Wetlands, Cameron County, Texas. Sheet 28 of 40.

WORKSPACE

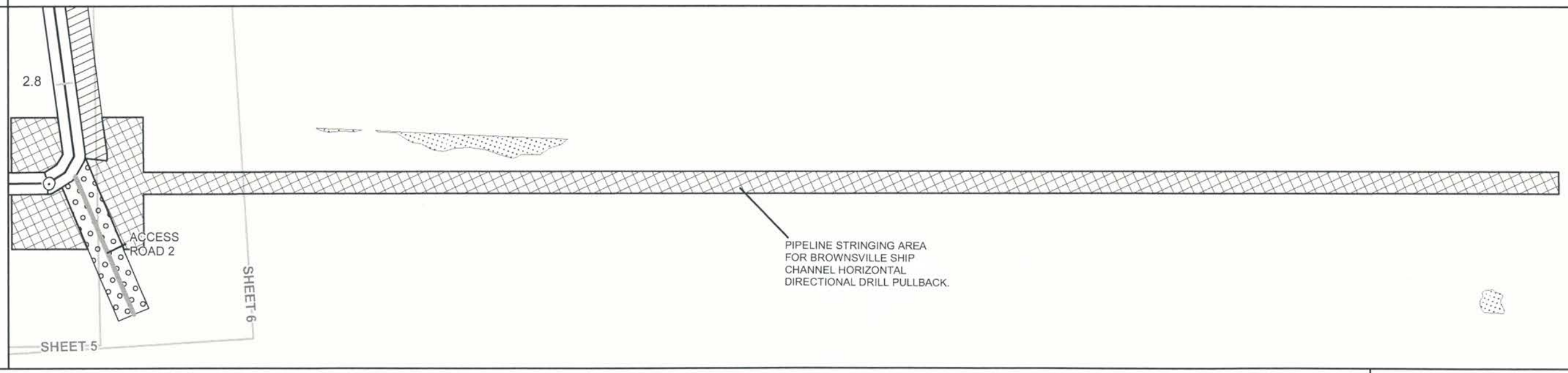

NOTES:

ENVIRONMENTAL KEY:
W - WETLAND
UF - UNCONSOLIDATED FLAT
OW - OPEN WATER

0 300 600 900 1,200
Feet

N

SHEET 17 OF 17

ALIGNMENT SHEET
PROPOSED LATERAL

DEC 13 2018

Annova LNG Common Infrastructure, LLC
SWG-2015-00110
Brownsville Ship Channel and Wetlands, Cameron County, Texas. Sheet 29 of 40.

Workspace is a combination of Temporary Workspace, Additional Temporary Workspace, and Access Road ROW. For an illustrated breakout of the Temporary Workspace, Additional Temporary Workspace, and Access Road ROW, see the alignment sheets.

- Proposed Centerline
- Operational
- Operational - Bore
- Workspace
- VCP Pipeline

B&A Wetlands
- Estuarine Emergent Wetland (EEM)
- Estuarine Scrub-Shrub Wetland (ESS)
- Palustrine Emergent Wetland (PEM)
- Unvegetated Flat/Washover
- Open Water

N

0 400
Feet

SHEET 1 OF 12

WETLAND IMPACTS
PROPOSED LATERAL

Annova LNG Common Infrastructure, LLC
SWG-2015-00110
Brownsville Ship Channel and Wetlands, Cameron County, Texas. Sheet 30 of 40.

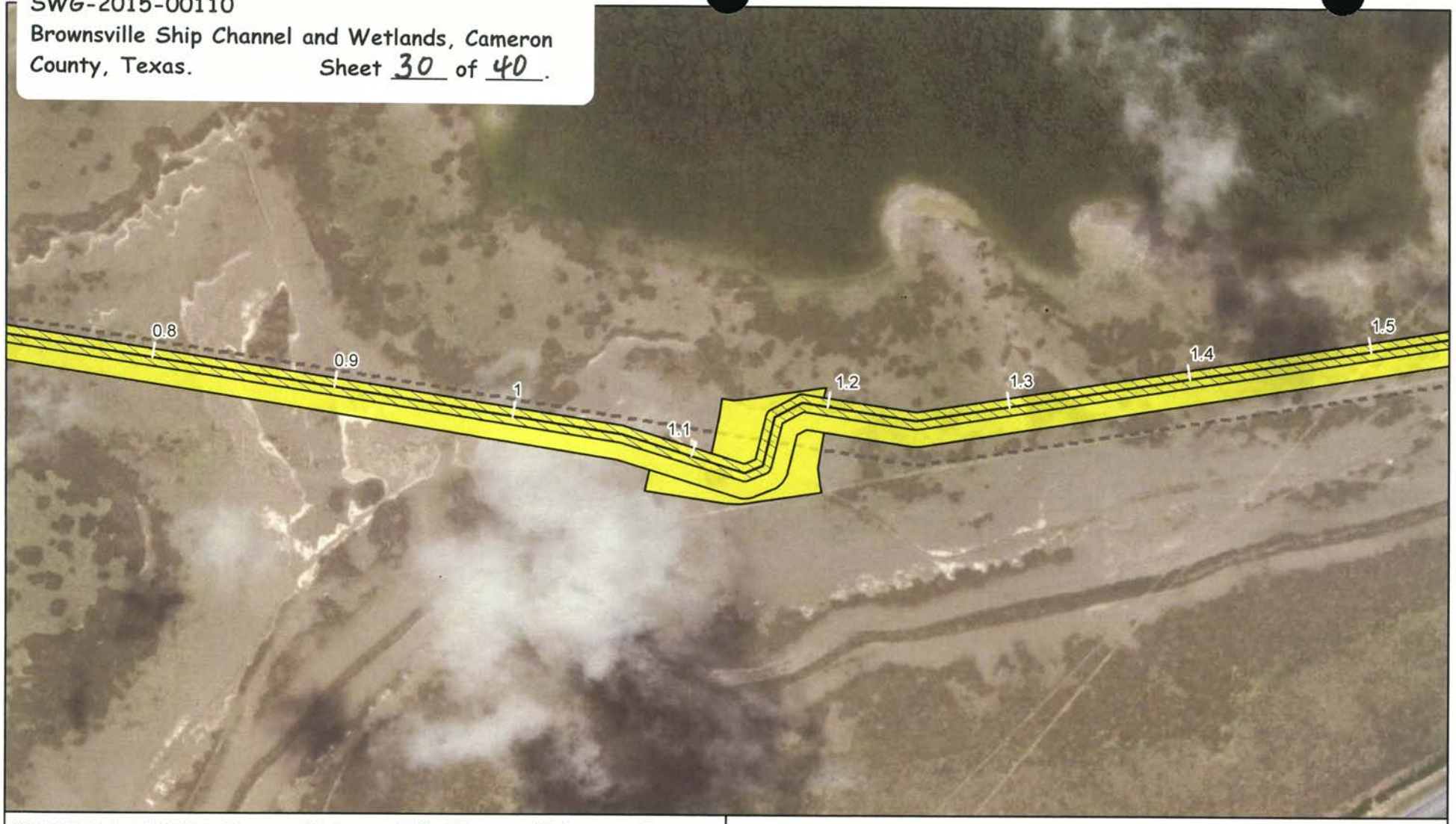

Workspace is a combination of Temporary Workspace, Additional Temporary Workspace, and Access Road ROW. For an illustrated breakout of the Temporary Workspace, Additional Temporary Workspace, and Access Road ROW, see the alignment sheets.

- Proposed Centerline
- Operational
- Operational - Bore
- Workspace
- VCP Pipeline

B&A Wetlands
- Estuarine Emergent Wetland (EEM)
- Estuarine Scrub-Shrub Wetland (ESS)
- Palustrine Emergent Wetland (PEM)
- Unvegetated Flat/Washover
- Open Water

N

0 400
Feet

SHEET 2 OF 12

WETLAND IMPACTS
PROPOSED LATERAL

NOV 23 2018

Annova LNG Common Infrastructure, LLC
SWG-2015-00110
Brownsville Ship Channel and Wetlands, Cameron County, Texas.
Sheet 31 of 40

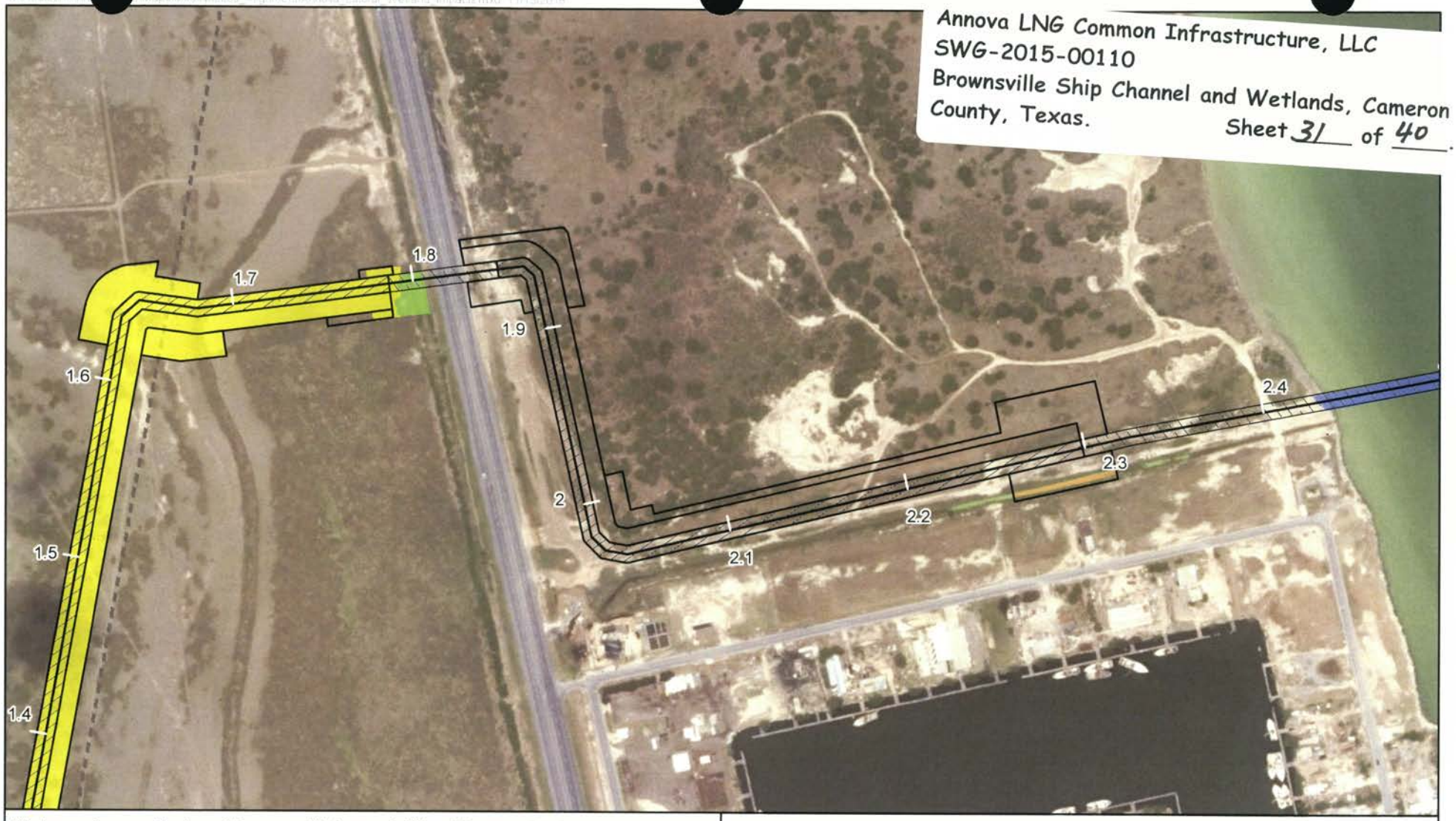

Workspace is a combination of Temporary Workspace, Additional Temporary Workspace, and Access Road ROW. For an illustrated breakout of the Temporary Workspace, Additional Temporary Workspace, and Access Road ROW, see the alignment sheets.

Operational – Bore = The portion of the operational ROW between the entry and exit points of a traditional bore or horizontal directional drill (HDD). No wetland or waterbody impacts are anticipated in these areas as the pipeline will be drilled under the features.

- Proposed Centerline
- Operational
- Operational - Bore
- Workspace
- VCP Pipeline

B&A Wetlands
- Estuarine Emergent Wetland (EEM)
- Estuarine Scrub-Shrub Wetland (ESS)
- Palustrine Emergent Wetland (PEM)
- Unvegetated Flat/Washover
- Open Water

N

0 400
Feet

SHEET 3 OF 12

WETLAND IMPACTS
PROPOSED LATERAL

NOV 23 2018

Workspace is a combination of Temporary Workspace, Additional Temporary Workspace, and Access Road ROW. For an illustrated breakout of the Temporary Workspace, Additional Temporary Workspace, and Access Road ROW, see the alignment sheets.

Operational – Bore = The portion of the operational ROW between the entry and exit points of a traditional bore or horizontal directional drill (HDD). No wetland or waterbody impacts are anticipated in these areas as the pipeline will be drilled under the features.

Proposed Centerline
Operational
Operational - Bore
Workspace

B&A Wetlands
Estuarine Emergent Wetland (EEM)
Estuarine Scrub-Shrub Wetland (ESS)
Palustrine Emergent Wetland (PEM)
Unvegetated Flat/Washover
Open Water

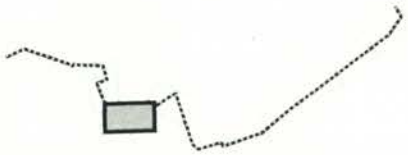

N

0 400
Feet

SHEET 4 OF 12

WETLAND IMPACTS
PROPOSED LATERAL

NOV 23 2018

Annova LNG Common Infrastructure, LLC
SWG-2015-00110
Brownsville Ship Channel and Wetlands, Cameron County, Texas. Sheet 33 of 40.

Workspace is a combination of Temporary Workspace, Additional Temporary Workspace, and Access Road ROW. For an illustrated breakout of the Temporary Workspace, Additional Temporary Workspace, and Access Road ROW, see the alignment sheets.

Operational – Bore = The portion of the operational ROW between the entry and exit points of a traditional bore or horizontal directional drill (HDD). No wetland or waterbody impacts are anticipated in these areas as the pipeline will be drilled under the features.

Proposed Centerline
Operational
Operational - Bore
Workspace

B&A Wetlands
Estuarine Emergent Wetland (EEM)
Estuarine Scrub-Shrub Wetland (ESS)
Palustrine Emergent Wetland (PEM)
Unvegetated Flat/Washover
Open Water

N

0 400
Feet

SHEET 5 OF 12

WETLAND IMPACTS
PROPOSED LATERAL

NOV 23 2018

Annova LNG Common Infrastructure, LLC
SWG-2015-00110
Brownsville Ship Channel and Wetlands, Cameron County, Texas. Sheet 34 of 40.

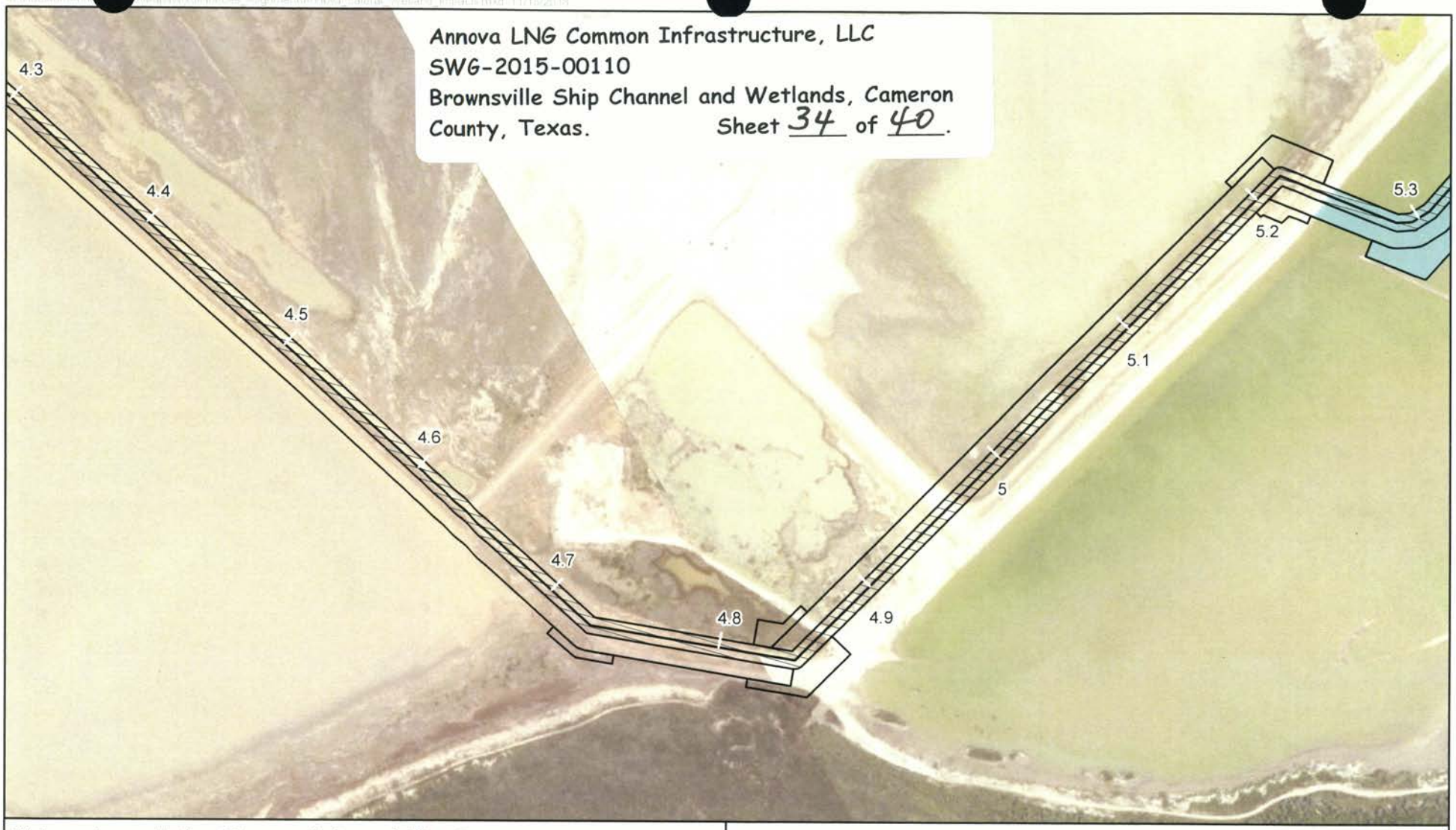

Workspace is a combination of Temporary Workspace, Additional Temporary Workspace, and Access Road ROW. For an illustrated breakout of the Temporary Workspace, Additional Temporary Workspace, and Access Road ROW, see the alignment sheets.

Proposed Centerline
Operational
Operational - Bore
Workspace

B&A Wetlands
Estuarine Emergent Wetland (EEM)
Estuarine Scrub-Shrub Wetland (ESS)
Palustrine Emergent Wetland (PEM)
Unvegetated Flat/Washover
Open Water

N

0 400
Feet

SHEET 6 OF 12

WETLAND IMPACTS
PROPOSED LATERAL

NOV 23 2018

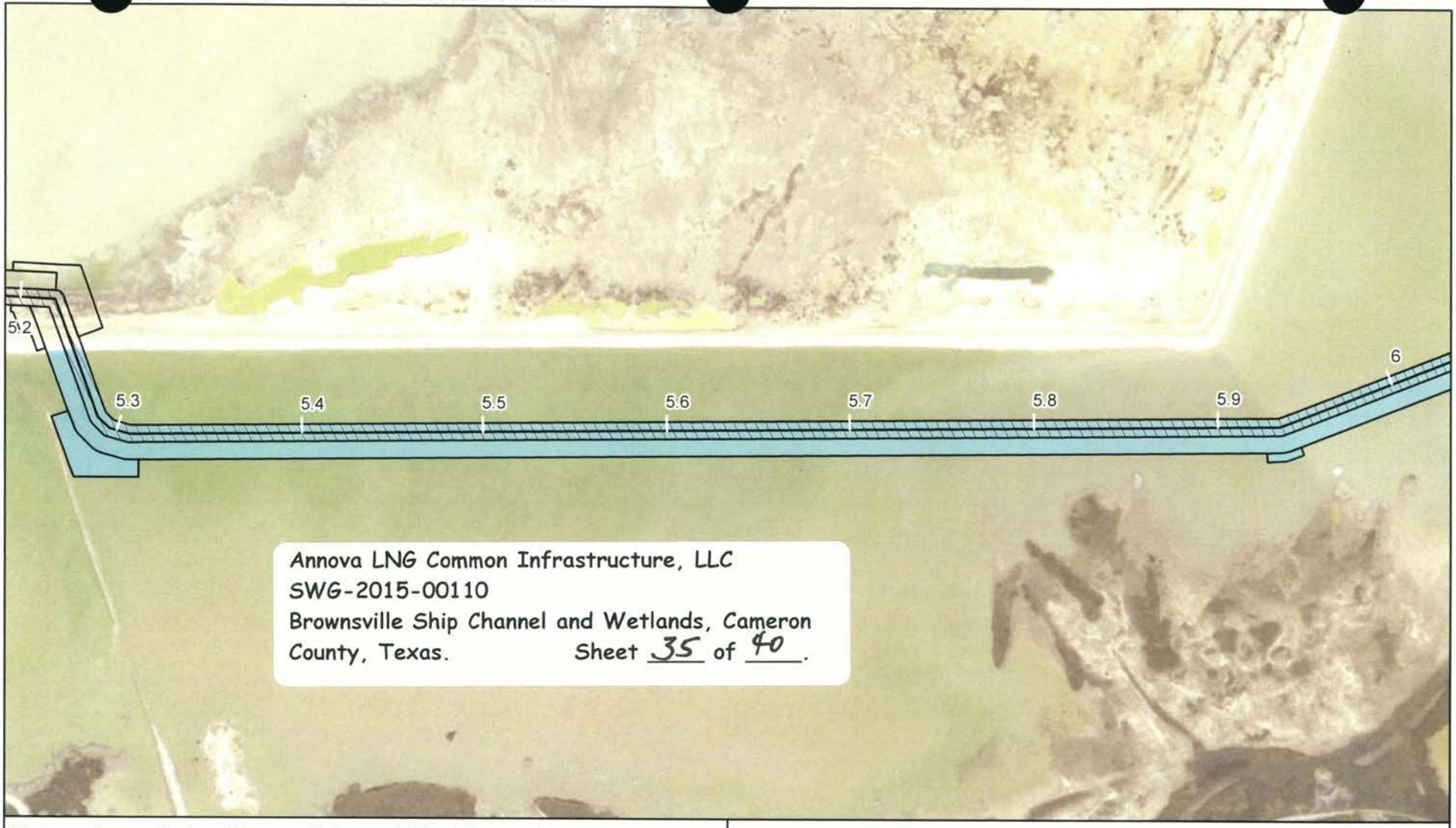

Workspace is a combination of Temporary Workspace, Additional Temporary Workspace, and Access Road ROW. For an illustrated breakout of the Temporary Workspace, Additional Temporary Workspace, and Access Road ROW, see the alignment sheets.

Proposed Centerline
Operational
Operational - Bore
Workspace

B&A Wetlands
Estuarine Emergent Wetland (EEM)
Estuarine Scrub-Shrub Wetland (ESS)
Palustrine Emergent Wetland (PEM)
Unvegetated Flat/Washover
Open Water

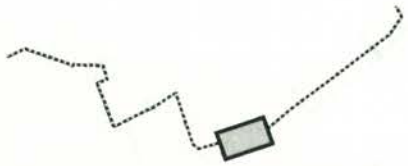

N

0 400
Feet

SHEET 7 OF 12

WETLAND IMPACTS
PROPOSED LATERAL

NOV 23 2018

Annova LNG Common Infrastructure, LLC
SWG-2015-00110
Brownsville Ship Channel and Wetlands, Cameron County, Texas.
Sheet 36 of 40.

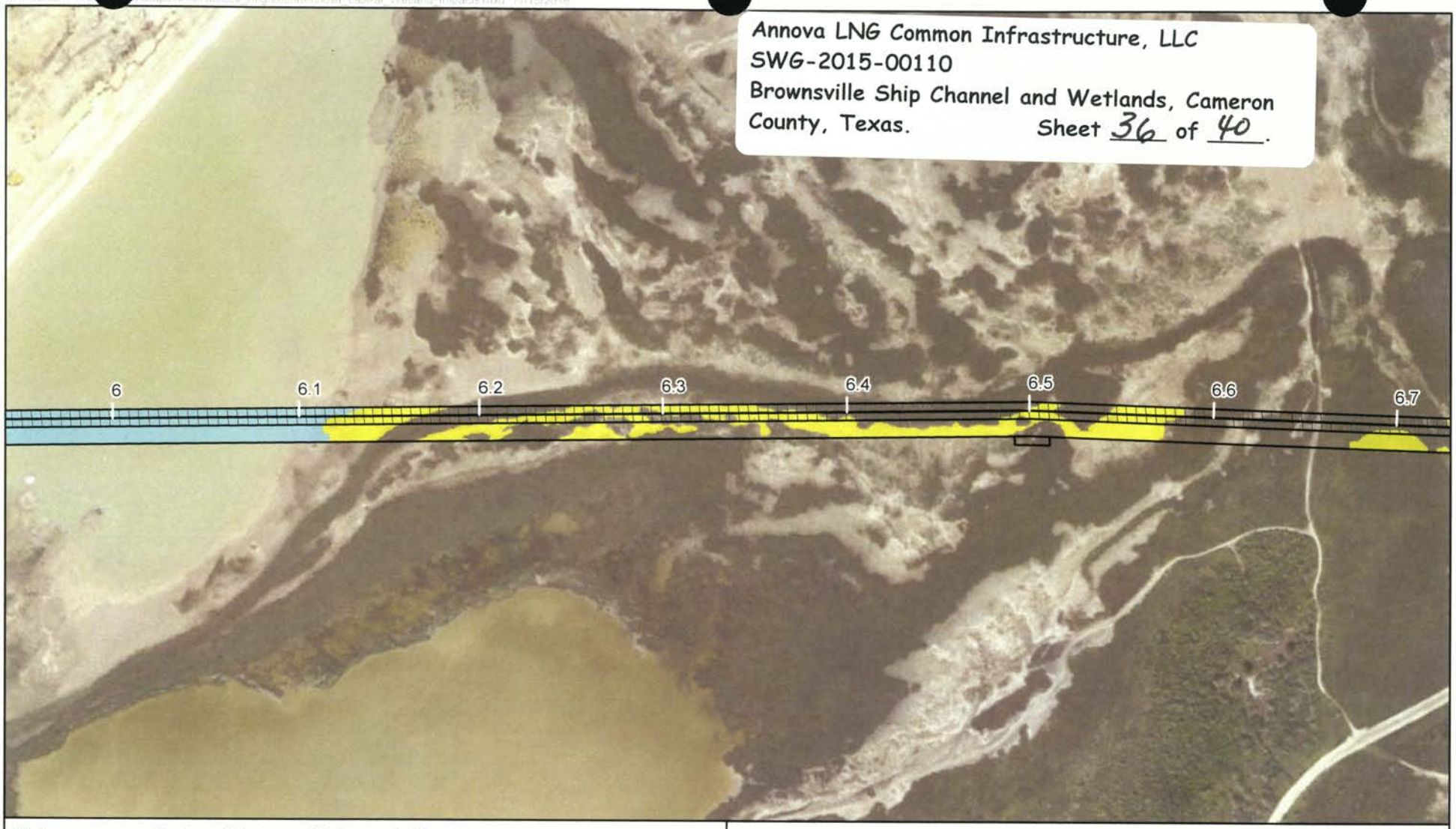

Workspace is a combination of Temporary Workspace, Additional Temporary Workspace, and Access Road ROW. For an illustrated breakout of the Temporary Workspace, Additional Temporary Workspace, and Access Road ROW, see the alignment sheets.

Proposed Centerline
Operational
Operational - Bore
Workspace

B&A Wetlands
Estuarine Emergent Wetland (EEM)
Estuarine Scrub-Shrub Wetland (ESS)
Palustrine Emergent Wetland (PEM)
Unvegetated Flat/Washover
Open Water

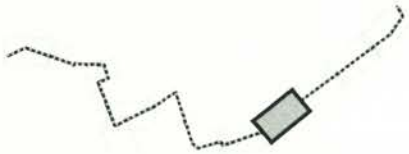

N

0 400
Feet

SHEET 8 OF 12

WETLAND IMPACTS
PROPOSED LATERAL

NOV 23 2018

Annova LNG Common Infrastructure, LLC
SWG-2015-00110
Brownsville Ship Channel and Wetlands, Cameron County, Texas. Sheet 37 of 40.

Workspace is a combination of Temporary Workspace, Additional Temporary Workspace, and Access Road ROW. For an illustrated breakout of the Temporary Workspace, Additional Temporary Workspace, and Access Road ROW, see the alignment sheets.

Proposed Centerline
Operational
Operational - Bore
Workspace

B&A Wetlands
Estuarine Emergent Wetland (EEM)
Estuarine Scrub-Shrub Wetland (ESS)
Palustrine Emergent Wetland (PEM)
Unvegetated Flat/Washover
Open Water

N

0 400
Feet

SHEET 9 OF 12

WETLAND IMPACTS
PROPOSED LATERAL

NOV 23 2018

Annova LNG Common Infrastructure, LLC
SWG-2015-00110
Brownsville Ship Channel and Wetlands, Cameron County, Texas.
Sheet 38 of 40.

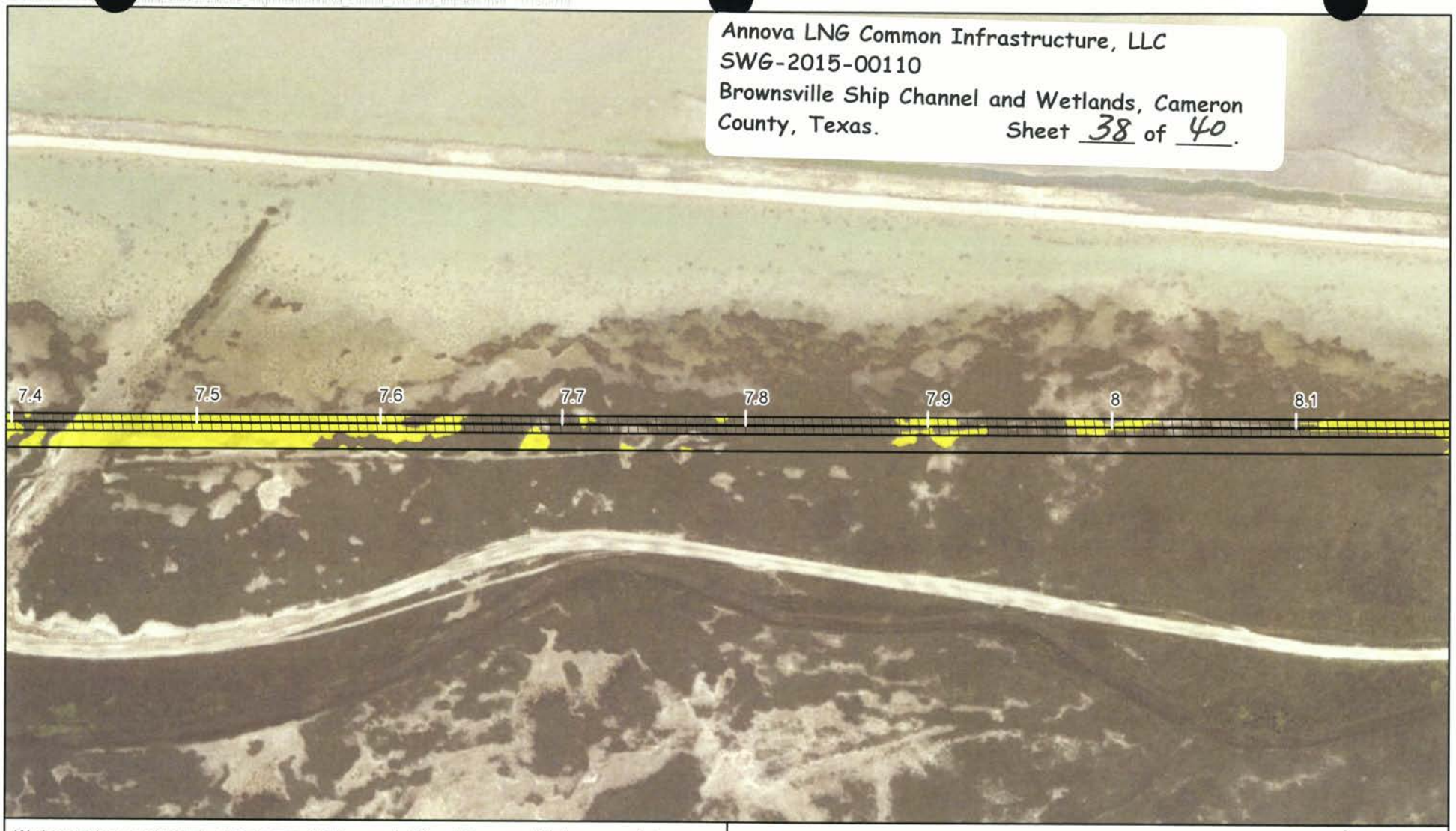

Workspace is a combination of Temporary Workspace, Additional Temporary Workspace, and Access Road ROW. For an illustrated breakout of the Temporary Workspace, Additional Temporary Workspace, and Access Road ROW, see the alignment sheets.

Proposed Centerline
Operational
Operational - Bore
Workspace

B&A Wetlands
Estuarine Emergent Wetland (EEM)
Estuarine Scrub-Shrub Wetland (ESS)
Palustrine Emergent Wetland (PEM)
Unvegetated Flat/Washover
Open Water

N

0 400
Feet

SHEET 10 OF 12

WETLAND IMPACTS
PROPOSED LATERAL

NOV 23 2018

M:\Houston\Annova_LNG\Maps\Mxd\Nueces_Alignment\Annova_Lateral_Wetland_Impacts.mxd: 12/13/2018

DEC 1 3 2018

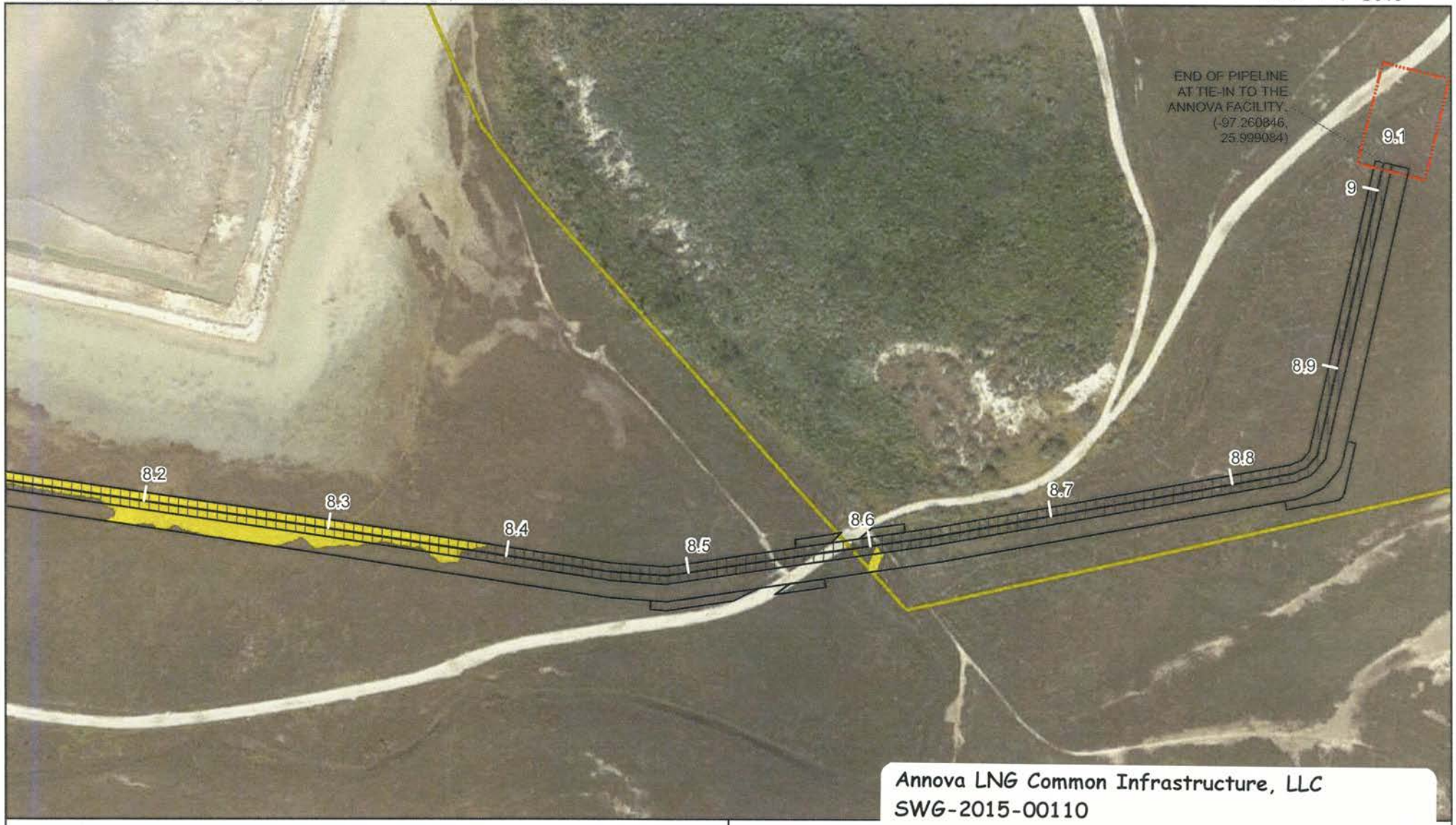

Workspace is a combination of Temporary Workspace, Additional Temporary Workspace, and Access Road ROW. For an illustrated breakout of the Temporary Workspace, Additional Temporary Workspace, and Access Road ROW, see the alignment sheets.

Annova LNG Common Infrastructure, LLC
SWG-2015-00110
Brownsville Ship Channel and Wetlands, Cameron County, Texas.
Sheet 39 of 40.

Proposed Centerline
Operational
Operational - Bore
Workspace
Project Site
Gas Meter Station

B&A Wetlands
Estuarine Emergent Wetland (EEM)
Estuarine Scrub-Shrub Wetland (ESS)
Palustrine Emergent Wetland (PEM)
Unvegetated Flat/Washover
Open Water

N

0 400
Feet

SHEET 11 OF 12

WETLAND IMPACTS
PROPOSED LATERAL

Workspace is a combination of Temporary Workspace, Additional Temporary Workspace, and Access Road ROW. For an illustrated breakout of the Temporary Workspace, Additional Temporary Workspace, and Access Road ROW, see the alignment sheets.

Operational – Bore = The portion of the operational ROW between the entry and exit points of a traditional bore or horizontal directional drill (HDD). No wetland or waterbody impacts are anticipated in these areas as the pipeline will be drilled under the features.

Proposed Centerline
Operational
Operational - Bore
Workspace

B&A Wetlands
Estuarine Emergent Wetland (EEM)
Estuarine Scrub-Shrub Wetland (ESS)
Palustrine Emergent Wetland (PEM)
Unvegetated Flat/Washover
Open Water

N

0 400
Feet

SHEET 12 OF 12

WETLAND IMPACTS
PROPOSED LATERAL

NOV 23 2018