JUL 26 2016

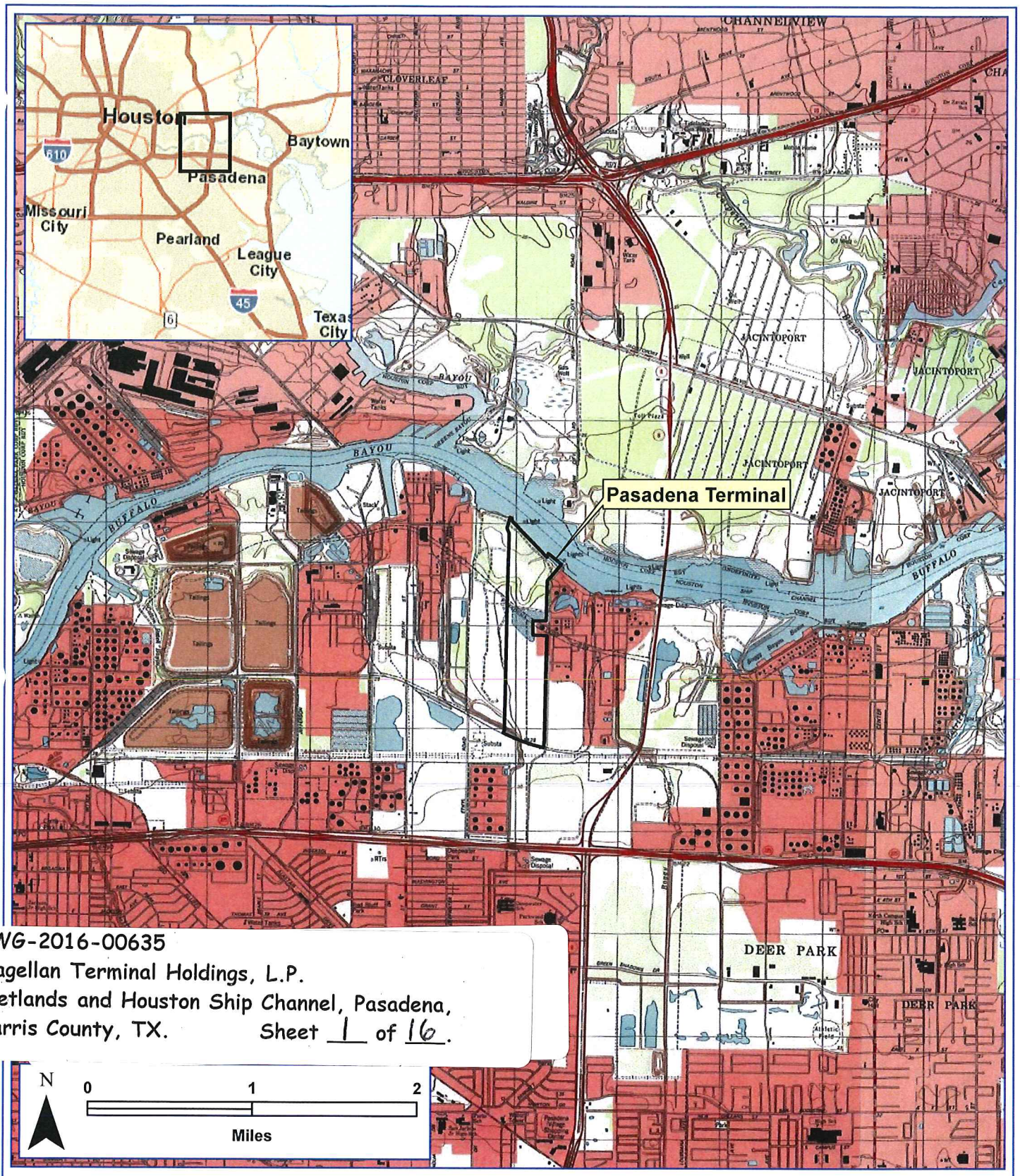

SWG-2016-00635
Magellan Terminal Holdings, L.P.
Wetlands and Houston Ship Channel, Pasadena,
Harris County, TX. Sheet 1 of 16.

Datum: GCS NAD83 Sources: ESRI-Streets & NAIP 2014 TX Imagery

Property Boundary

zephyr

FIGURE 3 - USGS TOPOGRAPHIC MAP

PASADENA TERMINAL

Magellan Terminals Holdings, L.P.
Harris County, Texas

H:\Magellan\16179 - Pasadena Terminal\GIS\3_USGSTopo_Map.mxd

Drafted By:	Reviewed By:	Project ID:	Date:
J. Knowles	M. Johnson	016179.004	5/31/2016

OCT 3 1 2016

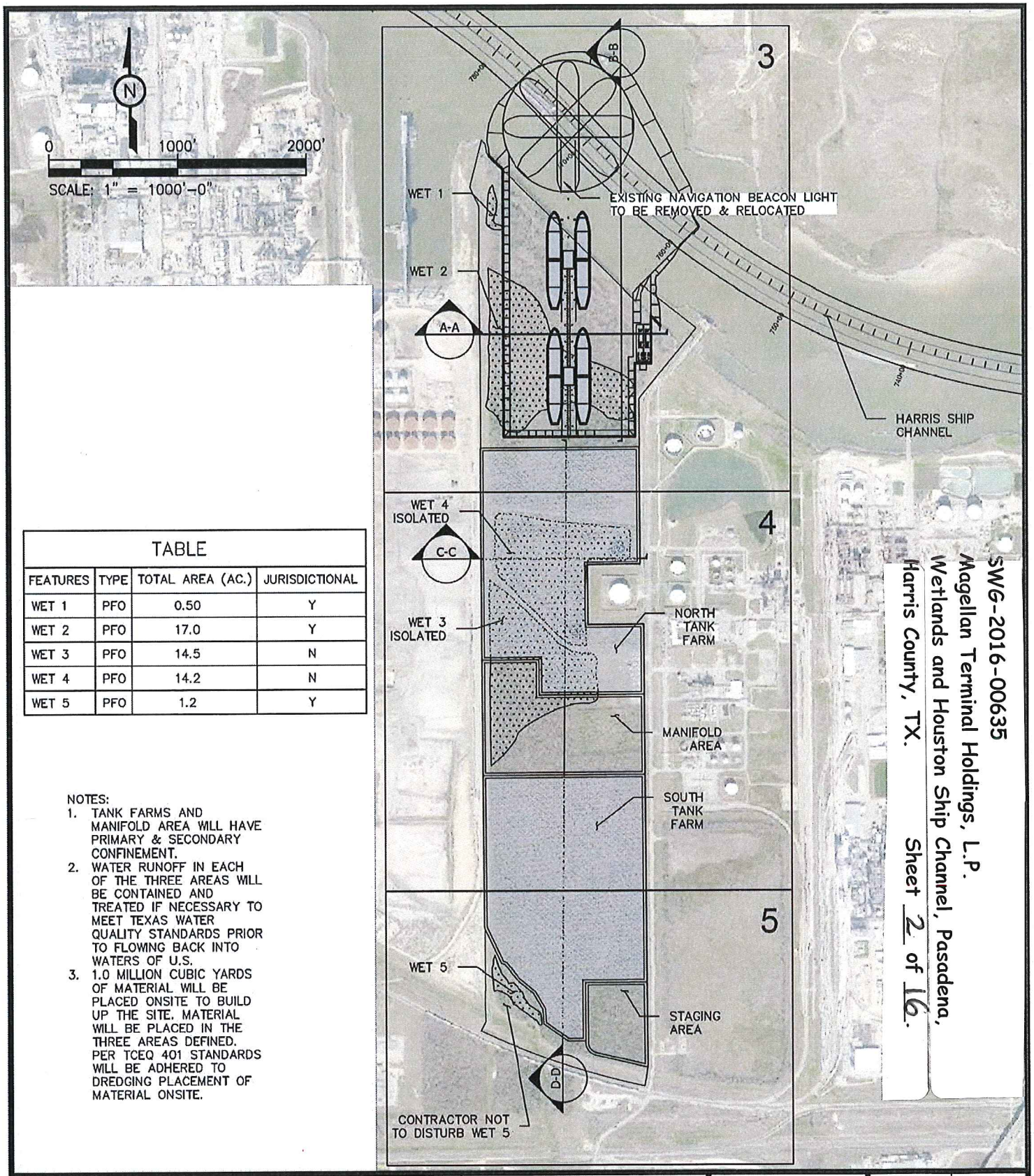

SWG-2016-00635
Magellan Terminal Holdings, L.P.
Wetlands and Houston Ship Channel, Pasadena,
Harris County, TX.
Sheet 2 of 16.

TABLE

FEATURES	TYPE	TOTAL AREA (AC.)	JURISDICTIONAL
WET 1	PFO	0.50	Y
WET 2	PFO	17.0	Y
WET 3	PFO	14.5	N
WET 4	PFO	14.2	N
WET 5	PFO	1.2	Y

NOTES:
1. TANK FARMS AND MANIFOLD AREA WILL HAVE PRIMARY & SECONDARY CONFINEMENT.
2. WATER RUNOFF IN EACH OF THE THREE AREAS WILL BE CONTAINED AND TREATED IF NECESSARY TO MEET TEXAS WATER QUALITY STANDARDS PRIOR TO FLOWING BACK INTO WATERS OF U.S.
3. 1.0 MILLION CUBIC YARDS OF MATERIAL WILL BE PLACED ONSITE TO BUILD UP THE SITE. MATERIAL WILL BE PLACED IN THE THREE AREAS DEFINED. PER TCEQ 401 STANDARDS WILL BE ADHERED TO DREDGING PLACEMENT OF MATERIAL ONSITE.

PURPOSE:	OVERALL LAYOUT SHEET INDEX	OWNER:	MAGELLAN TERMINAL HOLDINGS, LP	LLOYD ENGINEERING, INC HOUSTON TEXAS, USA LICENSE NO. F-002846	DESIGN BY:	KM
		APPLIED BY:	LLOYD ENGINEERING		DRAWN BY:	RHG
		APPLIC. No:	SWG-2016-00635		SCALE:	1"=1000'
LOCATION:	SHIP DOCKS PASADENNA, TX	COUNTY:	HARRIS		DATE:	9/27/2016
		WATER BODY:	HOUSTON SHIP CHANNEL		SHEET No:	2
		DATUM:	MLLW			

NOV 0 7 2016

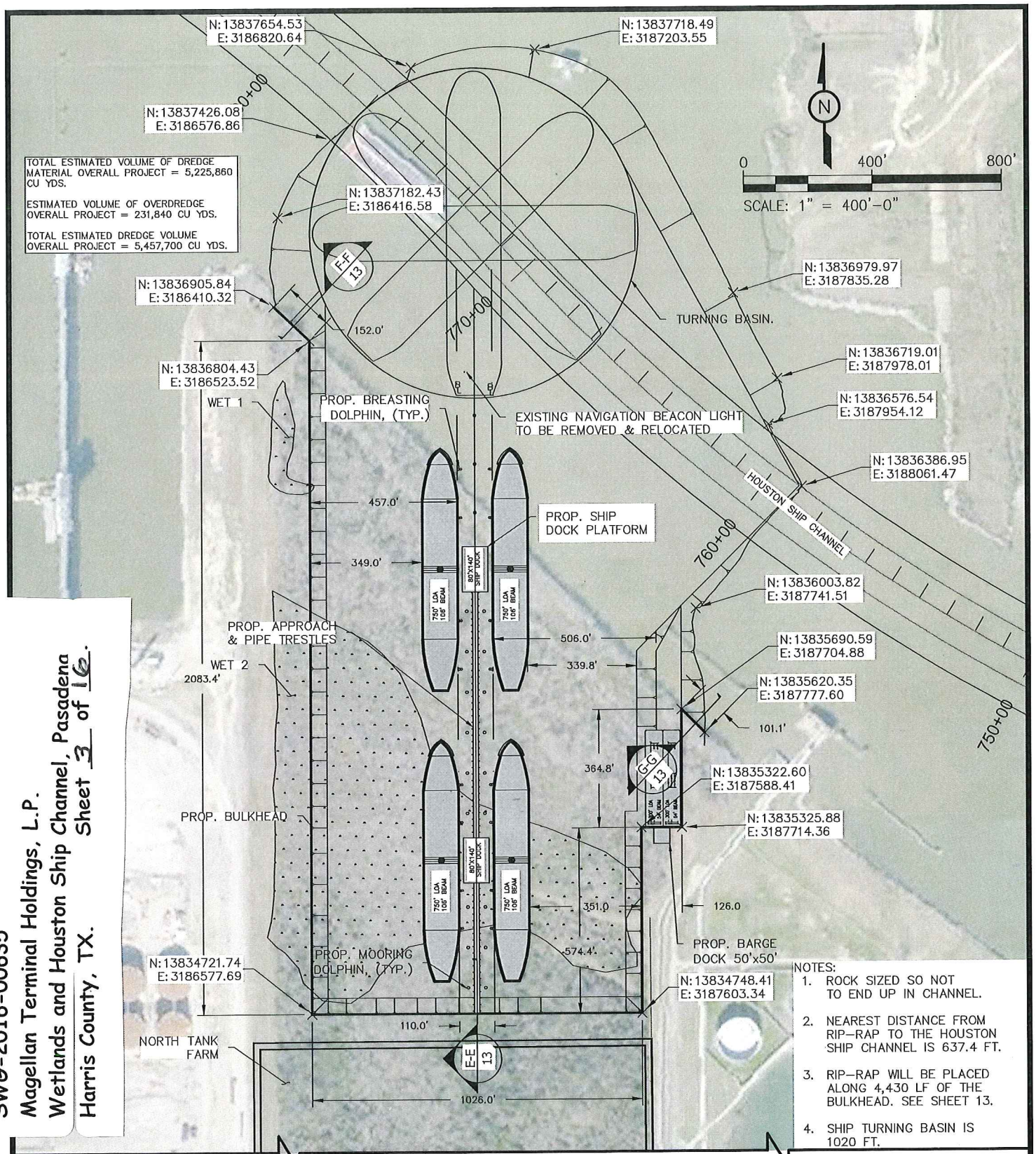

NOTES:

1. ROCK SIZED SO NOT TO END UP IN CHANNEL.
2. NEAREST DISTANCE FROM RIP-RAP TO THE HOUSTON SHIP CHANNEL IS 637.4 FT.
3. RIP-RAP WILL BE PLACED ALONG 4,430 LF OF THE BULKHEAD. SEE SHEET 13.
4. SHIP TURNING BASIN IS 1020 FT.

SEE MATCH LINE SHEET 4

SWG-2016-00635
Magellan Terminal Holdings, L.P.
Wetlands and Houston Ship Channel, Pasadena
Harris County, TX.
Sheet 3 of 16.

PURPOSE:	ENLARGED SITE PLAN (1 OF 3)	OWNER:	MAGELLAN TERMINAL HOLDINGS, LP	LLOYD ENGINEERING, INC HOUSTON TEXAS, USA LICENSE NO. F-002846	DESIGN BY:	KM
		APPLIED BY:	LLOYD ENGINEERING		DRAWN BY:	RHG
		APPLIC. No:	SWG-2016-00635		SCALE:	1"=400'
LOCATION:	SHIP DOCKS PASADENNA, TX	COUNTY:	HARRIS		DATE:	9/27/2016
		WATER BODY:	HOUSTON SHIP CHANNEL		SHEET No:	3
		DATUM:	MLLW			

OCT 3 1 2016

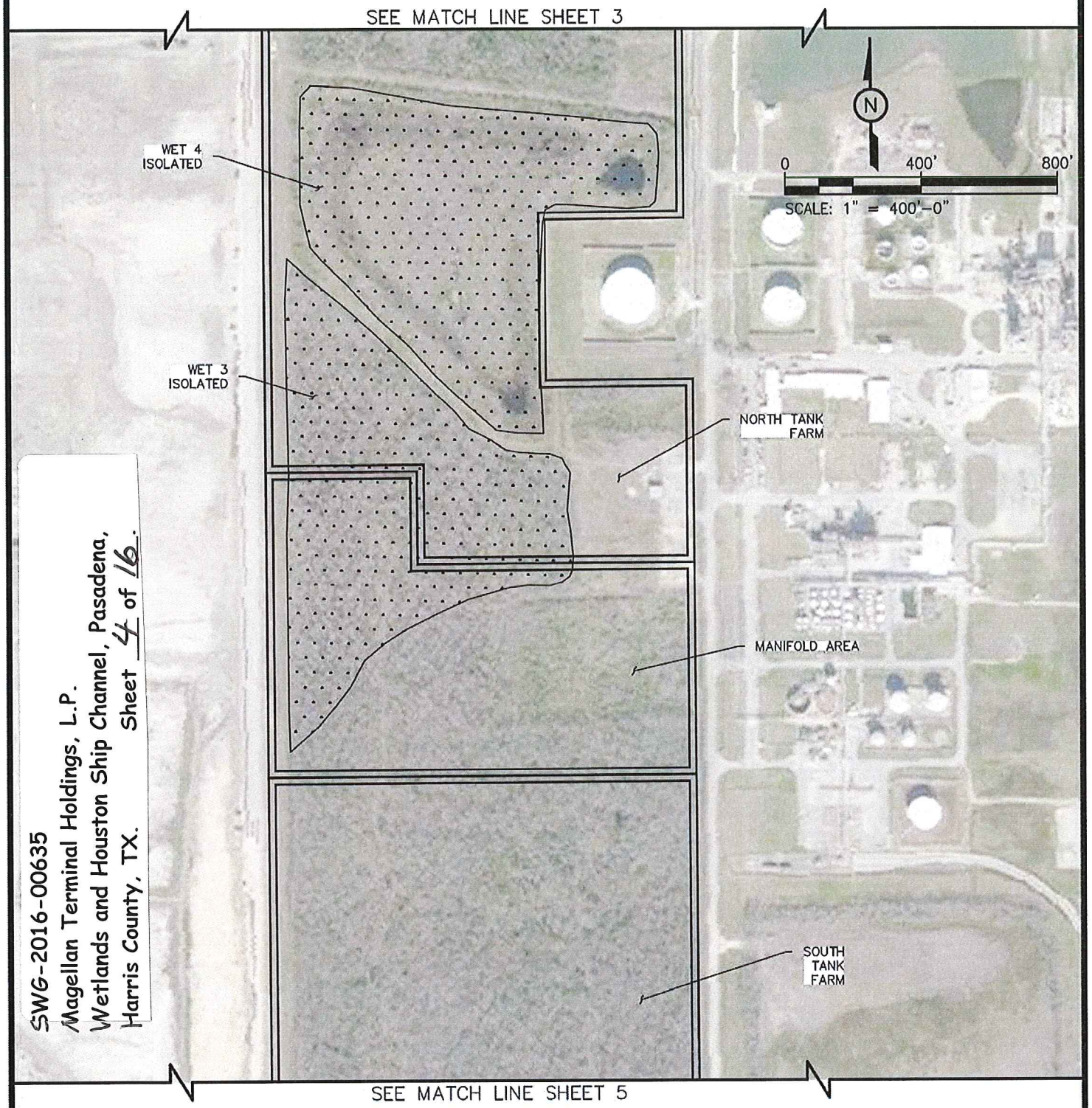

SWG-2016-00635
Magellan Terminal Holdings, L.P.
Wetlands and Houston Ship Channel, Pasadena,
Harris County, TX.
Sheet 4 of 16.

PURPOSE:	ENLARGED SITE PLAN (2 OF 3)	OWNER:	MAGELLAN TERMINAL HOLDINGS, LP	LLOYD ENGINEERING, INC HOUSTON TEXAS, USA LICENSE NO. F-002846	DESIGN BY:	KM
		APPLIED BY:	LLOYD ENGINEERING		DRAWN BY:	RHG
		APPLIC. No:	SWG-2016-00635		SCALE:	1"=400'
LOCATION:	SHIP DOCKS PASADENNA, TX	COUNTY:	HARRIS		DATE:	9/27/2016
		WATER BODY:	HOUSTON SHIP CHANNEL		SHEET No:	4
		DATUM:	MLLW			

OCT 3 1 2016

SWG-2016-00635
Magellan Terminal Holdings, L.P.
Wetlands and Houston Ship Channel, Pasadena,
Harris County, TX. Sheet 5 of 16.

N

0 400' 800'

SCALE: 1" = 400'-0"

SEE MATCH LINE SHEET 4

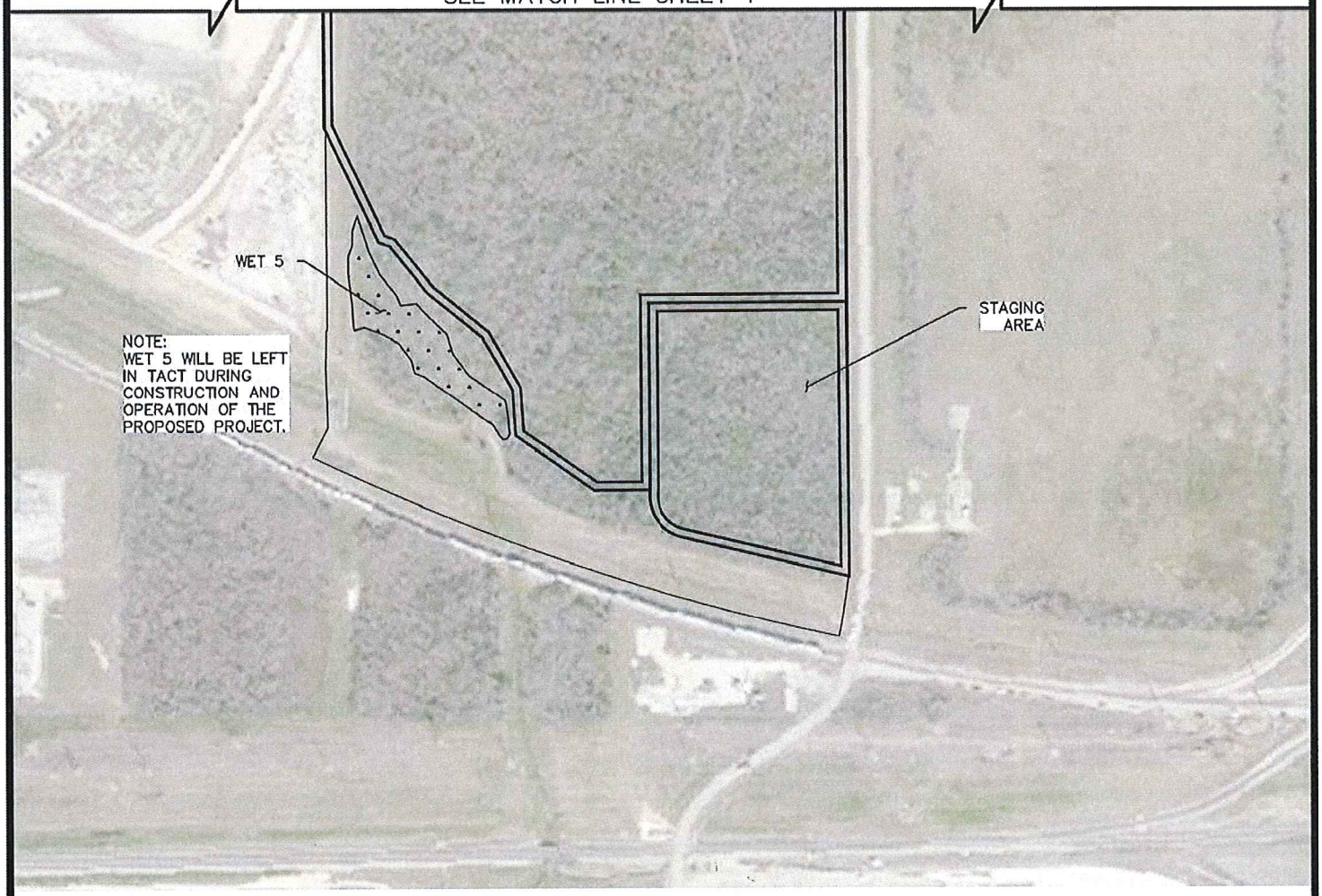

PURPOSE:	ENLARGED SITE PLAN (3 OF 3)	OWNER:	MAGELLAN TERMINAL HOLDINGS, LP	LLOYD ENGINEERING, INC HOUSTON TEXAS, USA LICENSE NO. F-002846	DESIGN BY:	KM
		APPLIED BY:	LLOYD ENGINEERING		DRAWN BY:	RHG
		APPLIC. No:	SWG-2016-00635		SCALE:	1"=400'
LOCATION:	SHIP DOCKS PASADENNA, TX	COUNTY:	HARRIS		DATE:	9/27/2016
		WATER BODY:	HOUSTON SHIP CHANNEL		SHEET No:	5
		DATUM:	MLLW			

SWG-2016-00635
Magellan Terminal Holdings, L.P.
Wetlands and Houston Ship Channel, Pasadena,
Harris County, TX. Sheet 6 of 16.

OCT 3 1 2016

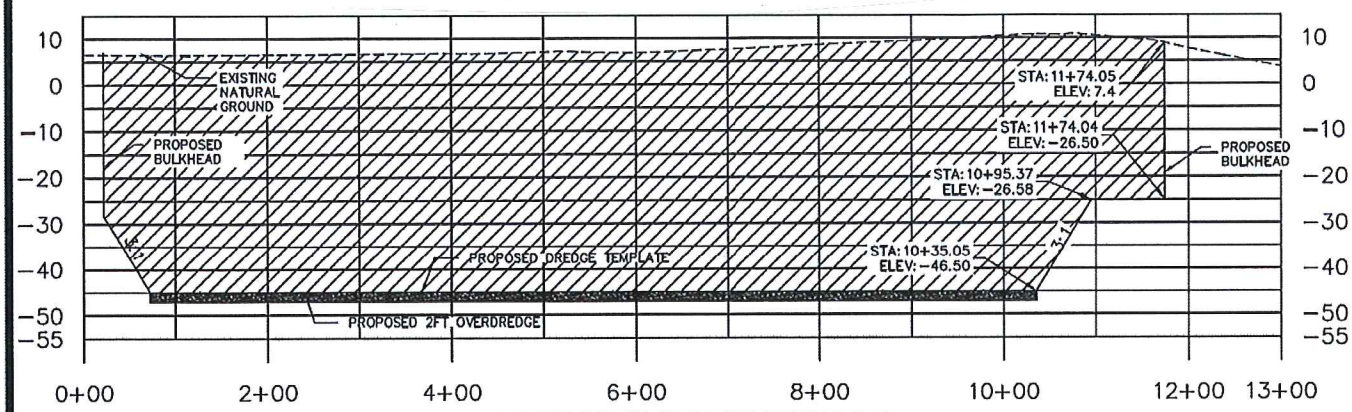

DREDGE SLOPE SECTION A-A

VERTICAL SCALE: 1"=4'
HORIZONTAL SCALE: 1"=200'
E/W THROUGH BERTH

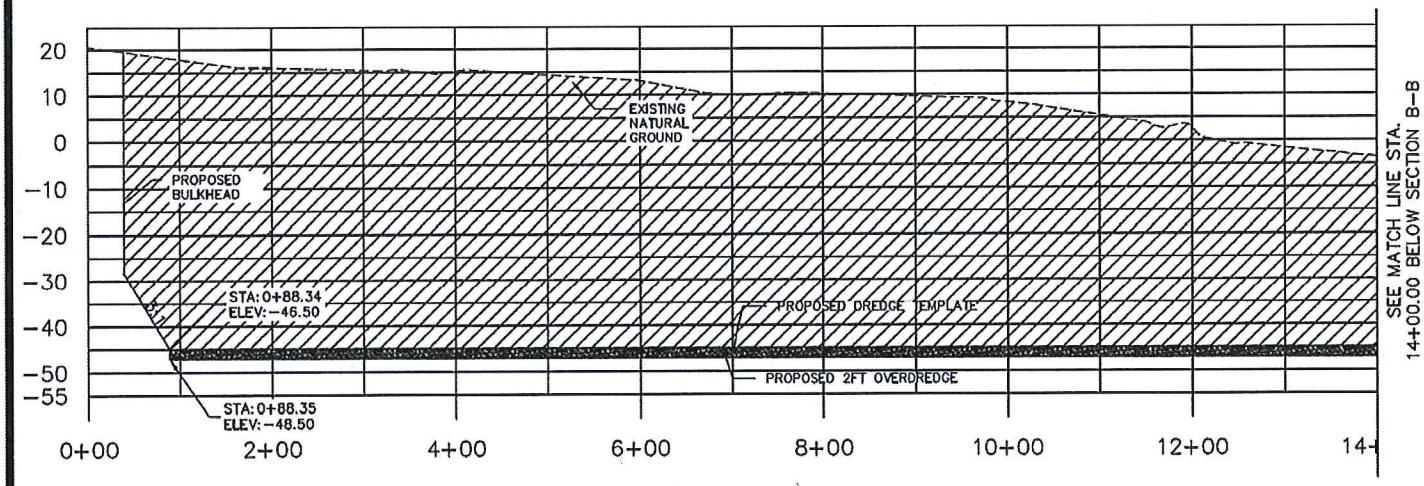

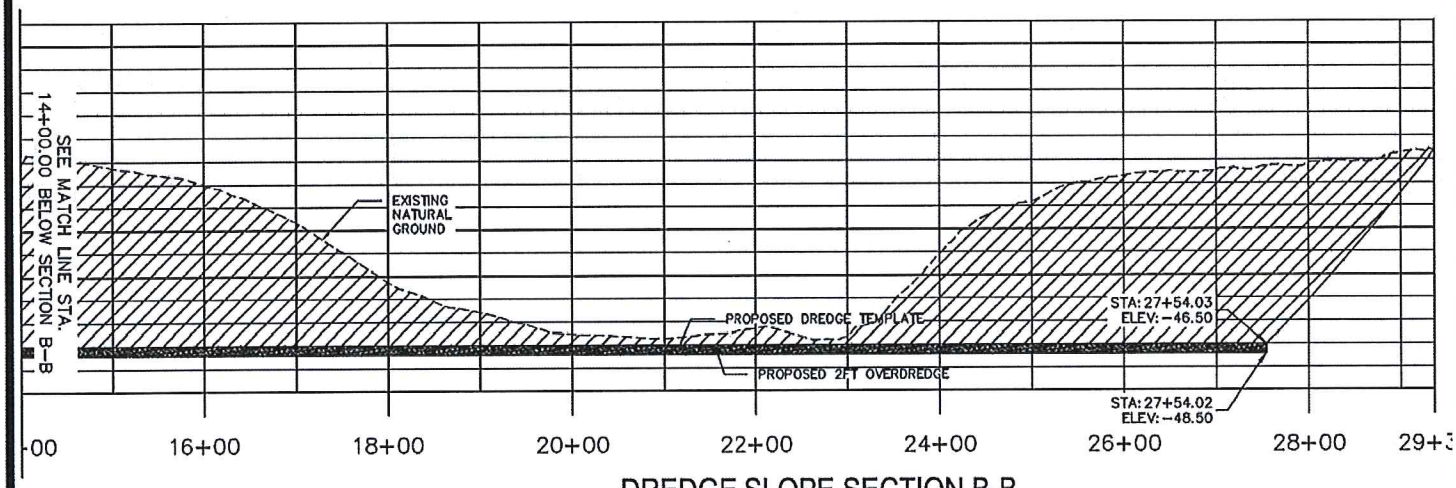

DREDGE SLOPE SECTION B-B

VERTICAL SCALE: 1"=4'
HORIZONTAL SCALE: 1"=200'
N/S THROUGH BERTH

TOTAL ESTIMATED VOLUME OF DREDGE MATERIAL OVERALL PROJECT = 5,225,860 CU YDS.
ESTIMATED VOLUME OF OVERDREDGE OVERALL PROJECT = 231,840 CU YDS.
TOTAL ESTIMATED DREDGE VOLUME OVERALL PROJECT = 5,457,700 CU YDS.

PURPOSE:	TYPICAL DREDGE SECTIONS	OWNER:	MAGELLAN TERMINAL HOLDINGS, LP	LLOYD ENGINEERING, INC HOUSTON TEXAS, USA LICENSE NO. F-002846	DESIGN BY:	KM
		APPLIED BY:	LLOYD ENGINEERING		DRAWN BY:	RHG
		APPLIC. No:	SWG-2016-00635		SCALE:	1"=200'
LOCATION:	SHIP DOCKS PASADENNA, TX	COUNTY:	HARRIS		DATE:	9/27/2016
		WATER BODY:	HOUSTON SHIP CHANNEL		SHEET No:	6
		DATUM:	MLLW			

SWG-2016-00635
Magellan Terminal Holdings, L.P.
Wetlands and Houston Ship Channel, Pasadena,
Harris County, TX. Sheet 7 of 16.

OCT 3 1 2016

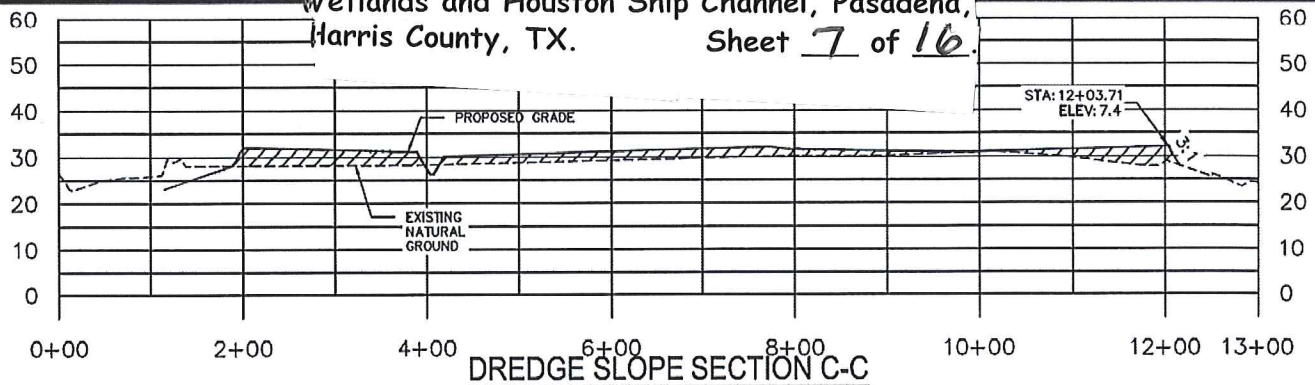

DREDGE SLOPE SECTION C-C

VERTICAL SCALE: 1"=4'
HORIZONTAL SCALE: 1"=200'
E/W THROUGH BERTH

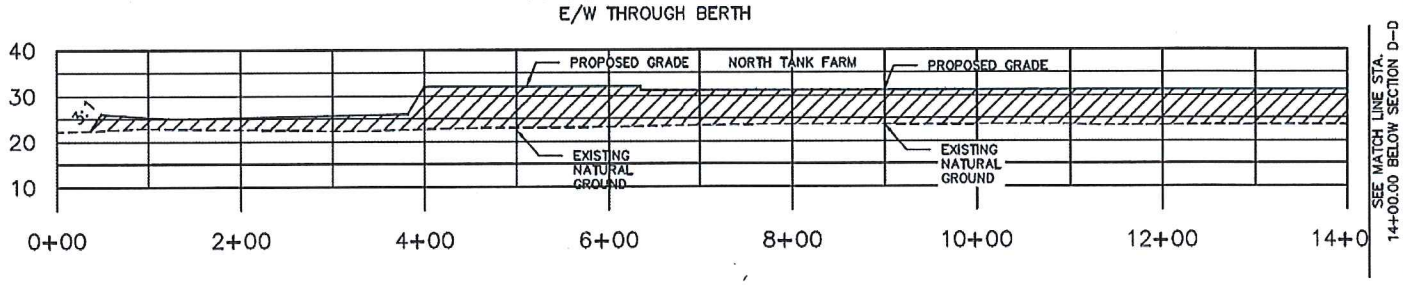

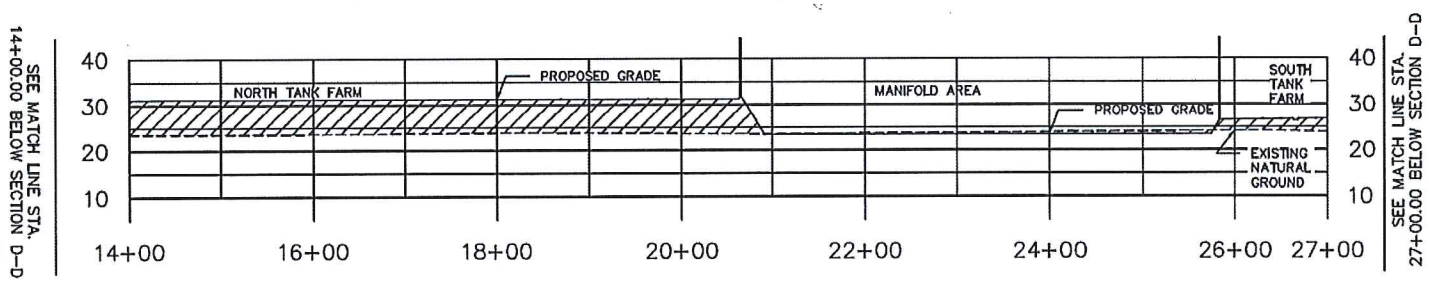

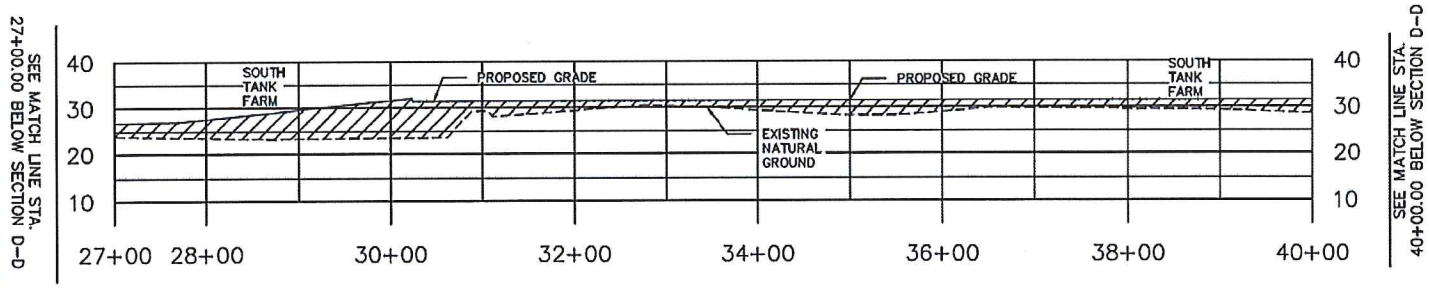

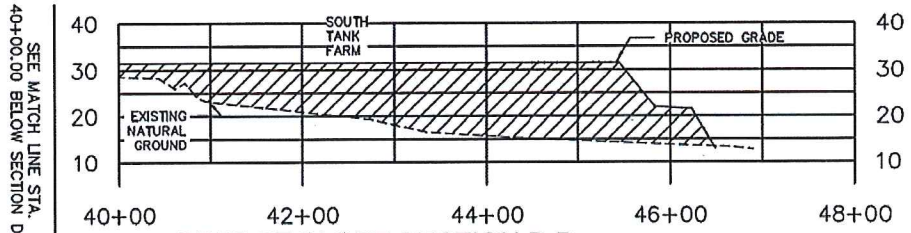

DREDGE SLOPE SECTION D-D

VERTICAL SCALE: 1"=4'
HORIZONTAL SCALE: 1"=200'
N/S THROUGH BERTH

TOTAL ESTIMATED VOLUME OF DREDGE MATERIAL OVERALL PROJECT = 5,225,860 CU YDS.
ESTIMATED VOLUME OF OVERDREDGE OVERALL PROJECT = 231,840 CU YDS.
TOTAL ESTIMATED DREDGE VOLUME OVERALL PROJECT = 5,457,700 CU YDS.

PURPOSE:	TYPICAL SECTIONS	OWNER:	MAGELLAN TERMINAL HOLDINGS, LP	DESIGN BY:	KM
		APPLIED BY:	LLOYD ENGINEERING	DRAWN BY:	RHG
		APPLIC. No:	SWG-2016-00635	SCALE:	1"=200'
LOCATION:	SHIP DOCKS PASADENNA, TX	COUNTY:	HARRIS	DATE:	9/27/2016
		WATER BODY:	HOUSTON SHIP CHANNEL	SHEET No:	7
		DATUM:	MLLW		

LLOYD ENGINEERING, INC
HOUSTON TEXAS, USA
LICENSE NO. F-002846

OCT 3 1 2016

SWG-2016-00635
Magellan Terminal Holdings, L.P.
Wetlands and Houston Ship Channel, Pasadena,
Harris County, TX. Sheet 8 of 16.

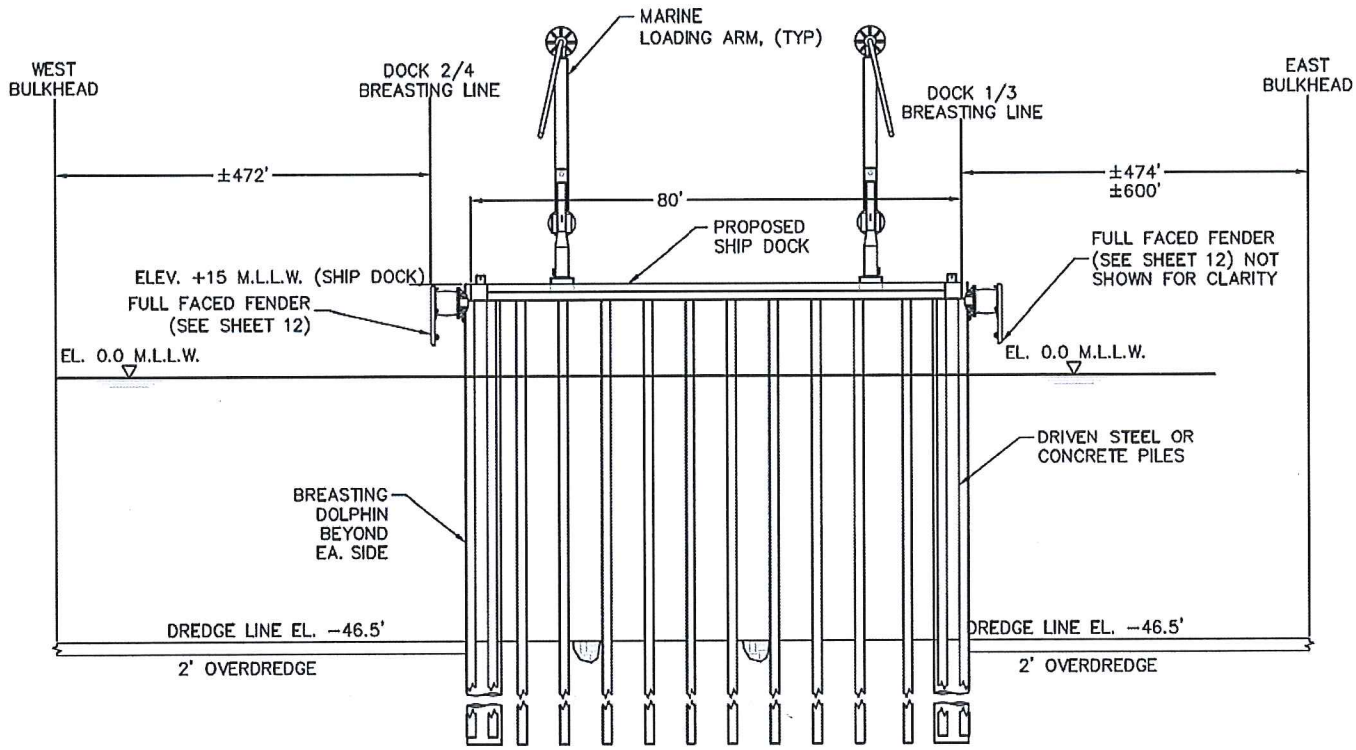

TYPICAL SHIP DOCK

PURPOSE:	TYPICAL SHIP DOCK	OWNER:	MAGELLAN TERMINAL HOLDINGS, LP	LLOYD ENGINEERING, INC HOUSTON TEXAS, USA LICENSE NO. F-002846	DESIGN BY:	KM
		APPLIED BY:	LLOYD ENGINEERING		DRAWN BY:	RHG
		APPLIC. No:	SWG-2016-00635		SCALE:	N.T.S.
LOCATION:	SHIP DOCKS PASADENNA, TX	COUNTY:	HARRIS		DATE:	9/27/2016
		WATER BODY:	HOUSTON SHIP CHANNEL		SHEET No:	8
		DATUM:	MLLW			

OCT 3 1 2016

SWG-2016-00635
Magellan Terminal Holdings, L.P.
Wetlands and Houston Ship Channel, Pasadena,
Harris County, TX. Sheet 9 of 16.

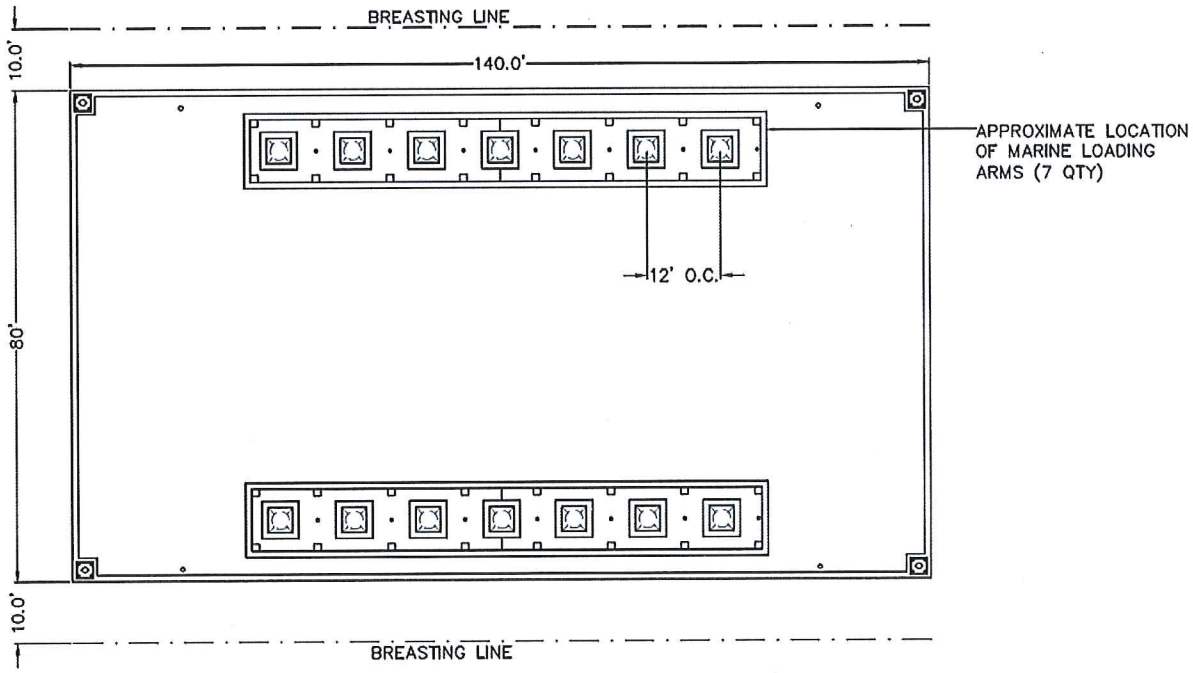

TYPICAL SHIP DOCK - PLATFORM PLAN

PURPOSE:	SHIP DOCK PLAN	OWNER:	MAGELLAN TERMINAL HOLDINGS, LP	LLOYD ENGINEERING, INC HOUSTON TEXAS, USA LICENSE NO. F-002846	DESIGN BY:	KM
		APPLIED BY:	LLOYD ENGINEERING		DRAWN BY:	RHG
		APPLIC. No:	SWG-2016-00635		SCALE:	N.T.S.
LOCATION:	SHIP DOCKS PASADENNA, TX	COUNTY:	HARRIS		DATE:	9/27/2016
		WATER BODY:	HOUSTON SHIP CHANNEL		SHEET No:	9
		DATUM:	MLLW			

SWG-2016-00635
Magellan Terminal Holdings, L.P.
Wetlands and Houston Ship Channel, Pasadena,
Harris County, TX. Sheet 10 of 16.

OCT 3 1 2016

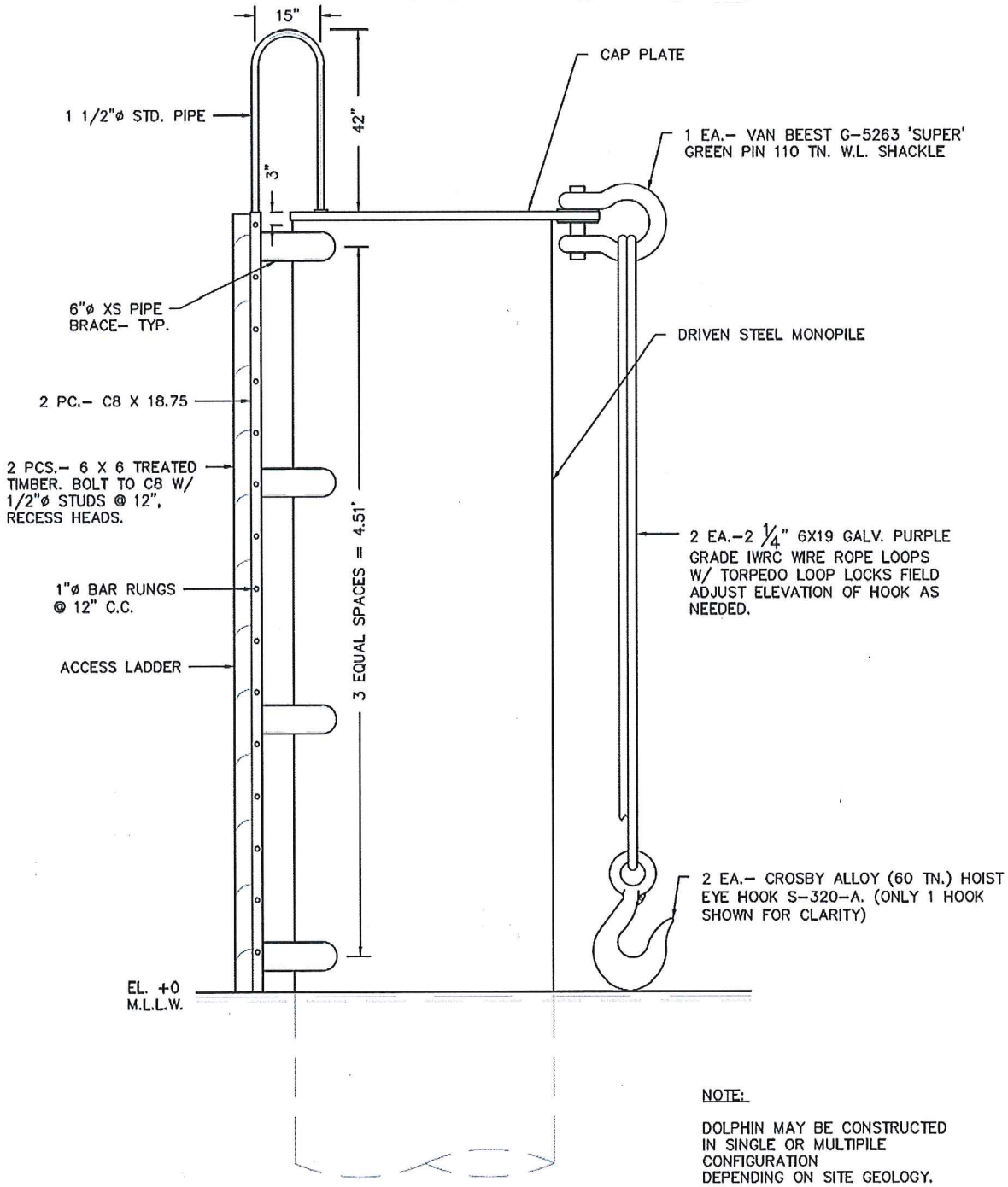

NOTE:

DOLPHIN MAY BE CONSTRUCTED IN SINGLE OR MULTIPLE CONFIGURATION DEPENDING ON SITE GEOLOGY.

MOORING DOLPHIN
TYP. SIDE ELEVATION

TYPICAL 21 PLACES

PURPOSE:	MOORING DOLPHIN DETAILS	OWNER:	MAGELLAN TERMINAL HOLDINGS, LP	LLOYD ENGINEERING, INC HOUSTON TEXAS, USA LICENSE NO. F–002846	DESIGN BY:	KM
		APPLIED BY:	LLOYD ENGINEERING		DRAWN BY:	RHG
		APPLIC. No:	SWG–2016–00635		SCALE:	N.T.S.
LOCATION:	SHIP DOCKS PASADENNA, TX	COUNTY:	HARRIS		DATE:	9/27/2016
		WATER BODY:	HOUSTON SHIP CHANNEL		SHEET No:	10
		DATUM:	MLLW			

OCT 3 1 2016

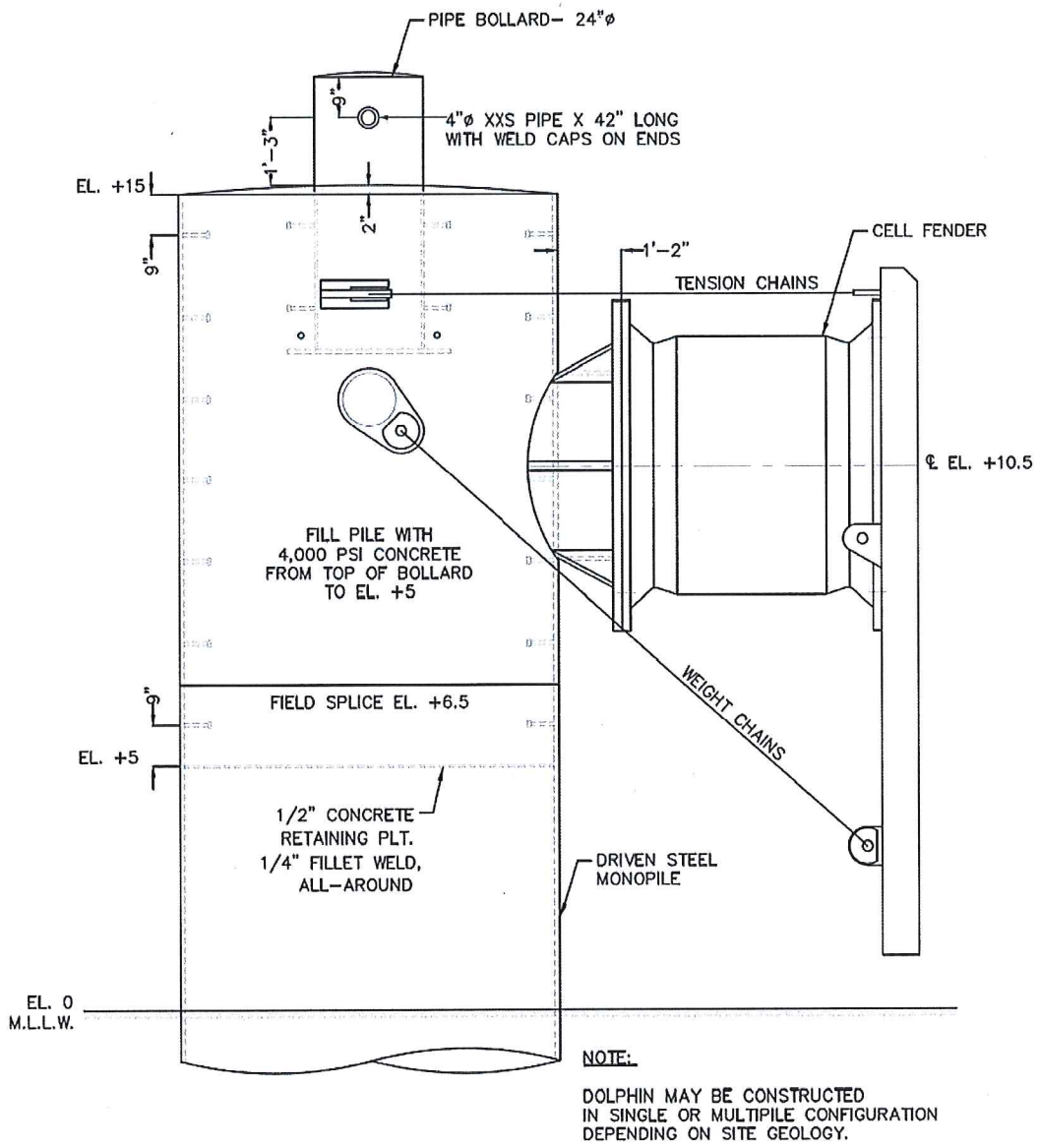

NOTE:

DOLPHIN MAY BE CONSTRUCTED
IN SINGLE OR MULTIPILE CONFIGURATION
DEPENDING ON SITE GEOLOGY.

BREASTING DOLPHINS
TYP. SIDE ELEVATION

TYPICAL 16 PLACES

SWG-2016-00635
Magellan Terminal Holdings, L.P.
Wetlands and Houston Ship Channel, Pasadena,
Harris County, TX. **Sheet 11 of 16.**

PURPOSE:	BREASTING DOLPHIN DETAILS	OWNER:	MAGELLAN TERMINAL HOLDINGS, LP	LLOYD ENGINEERING, INC HOUSTON TEXAS, USA LICENSE NO. F-002846	DESIGN BY:	KM
		APPLIED BY:	LLOYD ENGINEERING		DRAWN BY:	RHG
		APPLIC. No:	SWG–2016–00635		SCALE:	N.T.S.
LOCATION:	SHIP DOCKS PASADENNA, TX	COUNTY:	HARRIS		DATE:	9/27/2016
		WATER BODY:	HOUSTON SHIP CHANNEL		SHEET No:	11
		DATUM:	MLLW			

OCT 3 1 2016

SWG-2016-00635
Magellan Terminal Holdings, L.P.
Wetlands and Houston Ship Channel, Pasadena,
Harris County, TX. Sheet 12 of 16.

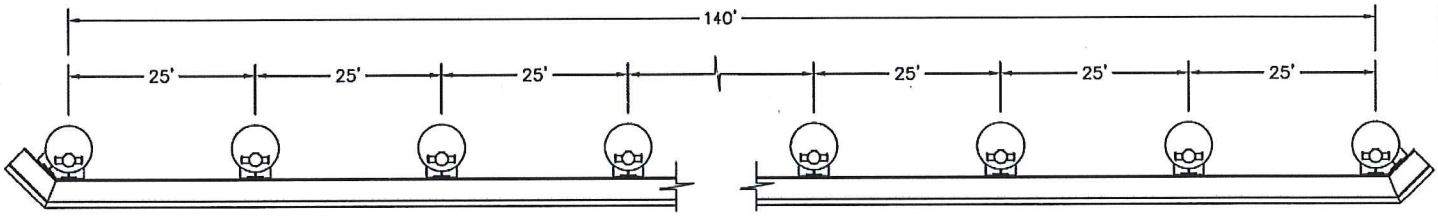

TYPICAL SHIP DOCK - FENDER SYSTEM PLAN VIEW
(4-REQ'D)

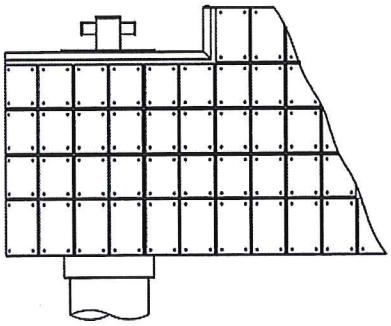

FENDER PADS SHOWN

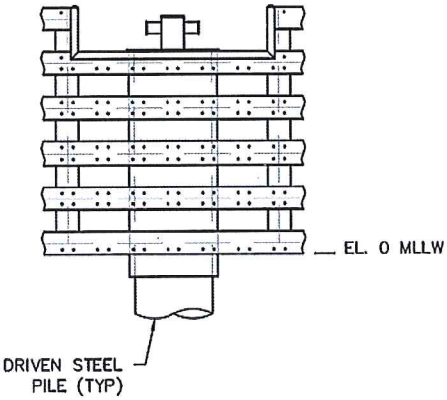

PARTIAL FRONT ELEVATION

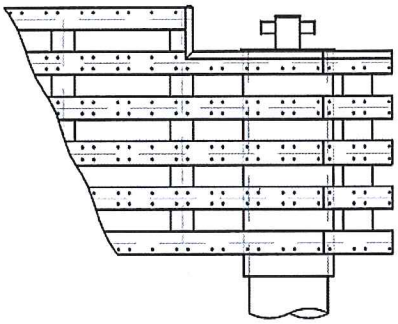

FRAMING BEAMS SHOWN

DOCK FENDER SYSTEM

ELEVATIONS ARE BASED ON MEAN LOWER LOW WATER DATUM

PURPOSE:	DOCK FENDER SYSTEM	OWNER:	MAGELLAN TERMINAL HOLDINGS, LP	LLOYD ENGINEERING, INC HOUSTON TEXAS, USA LICENSE NO. F-002846	DESIGN BY:	KM
		APPLIED BY:	LLOYD ENGINEERING		DRAWN BY:	RHG
		APPLIC. No:			SCALE:	N.T.S.
LOCATION:	SHIP DOCKS PASADENNA, TX	COUNTY:	HARRIS		DATE:	9/6/2016
		WATER BODY:	HOUSTON SHIP CHANNEL		SHEET No:	12
		DATUM:	MLLW			

NOV 0 7 2016

SWG-2016-00635
Magellan Terminal Holdings, L.P.
Wetlands and Houston Ship Channel, Pasadena,
Harris County, TX. Sheet 13 of 16.

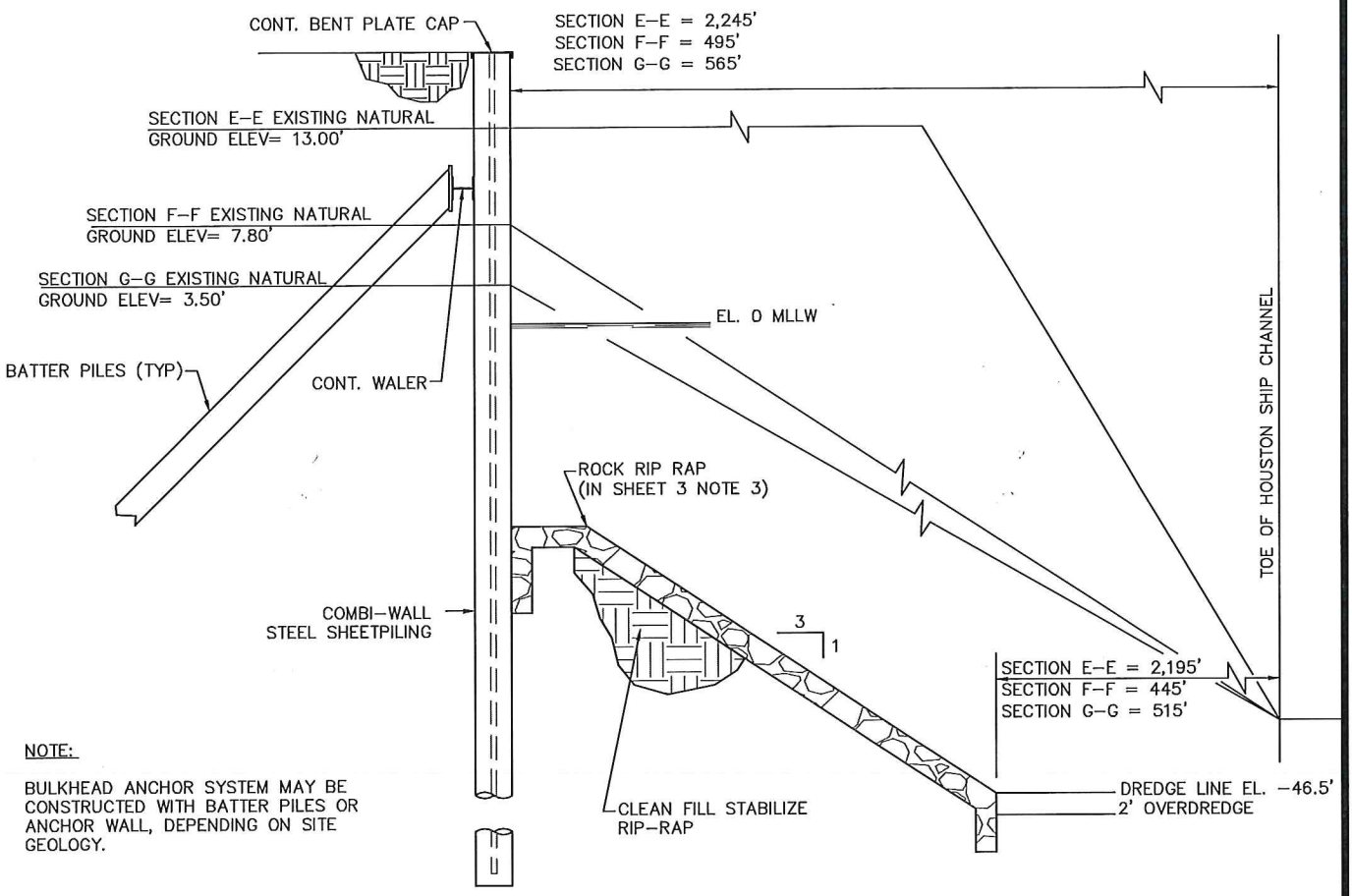

NOTE:

BULKHEAD ANCHOR SYSTEM MAY BE CONSTRUCTED WITH BATTER PILES OR ANCHOR WALL, DEPENDING ON SITE GEOLOGY.

TYPICAL BULKHEAD SECTION E-E 3 F-F 3 G-G 3

PURPOSE:	TYPICAL BULKHEAD SECTION	OWNER:	MAGELLAN TERMINAL HOLDINGS, LP	LLOYD ENGINEERING, INC HOUSTON TEXAS, USA LICENSE NO. F–002846	DESIGN BY:	KM
		APPLIED BY:	LLOYD ENGINEERING		DRAWN BY:	RHG
		APPLIC. No:	SWG–2016–00635		SCALE:	N.T.S.
LOCATION:	SHIP DOCKS PASADENNA, TX	COUNTY:	HARRIS		DATE:	9/27/2016
		WATER BODY:	HOUSTON SHIP CHANNEL		SHEET No:	13
		DATUM:	MLLW			

SWG-2016-00635
Magellan Terminal Holdings, L.P.
Wetlands and Houston Ship Channel, Pasadena,
Harris County, TX. Sheet 14 of 16.

OCT 3 1 2016

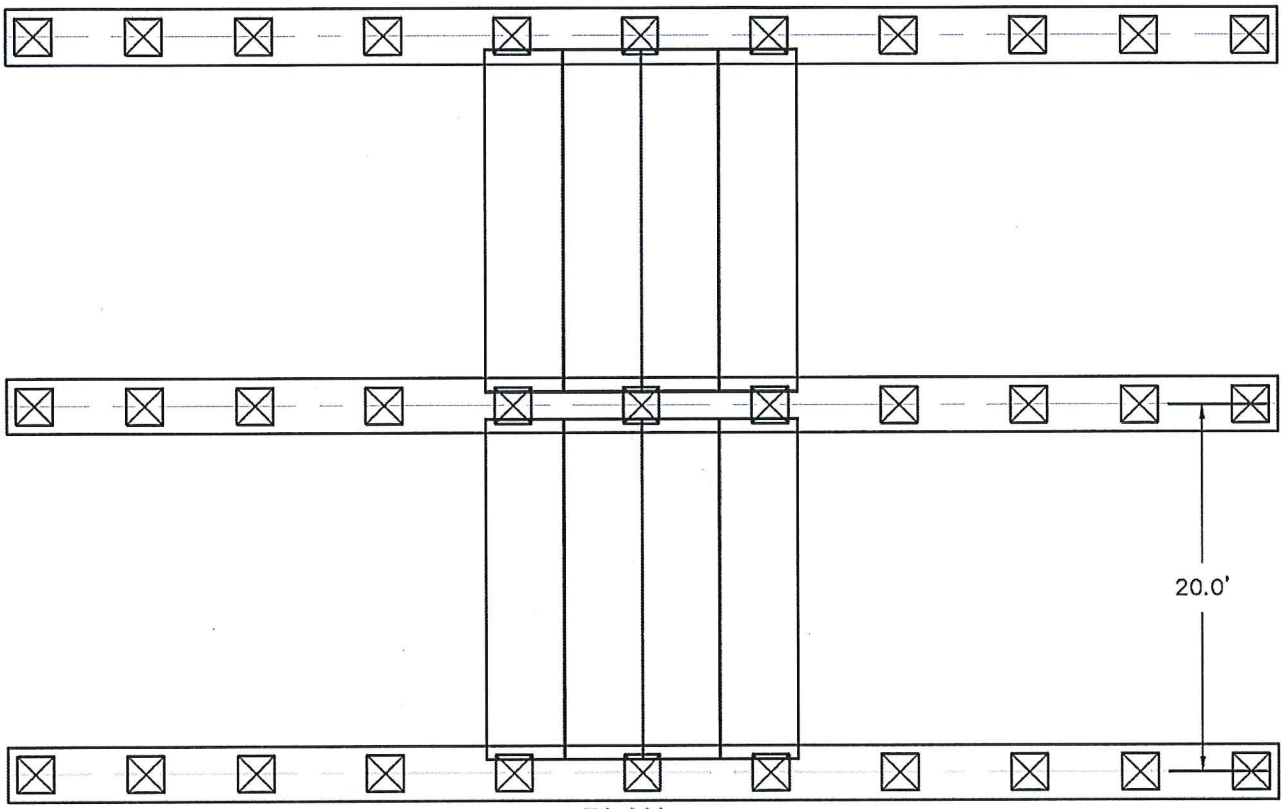

PLAN

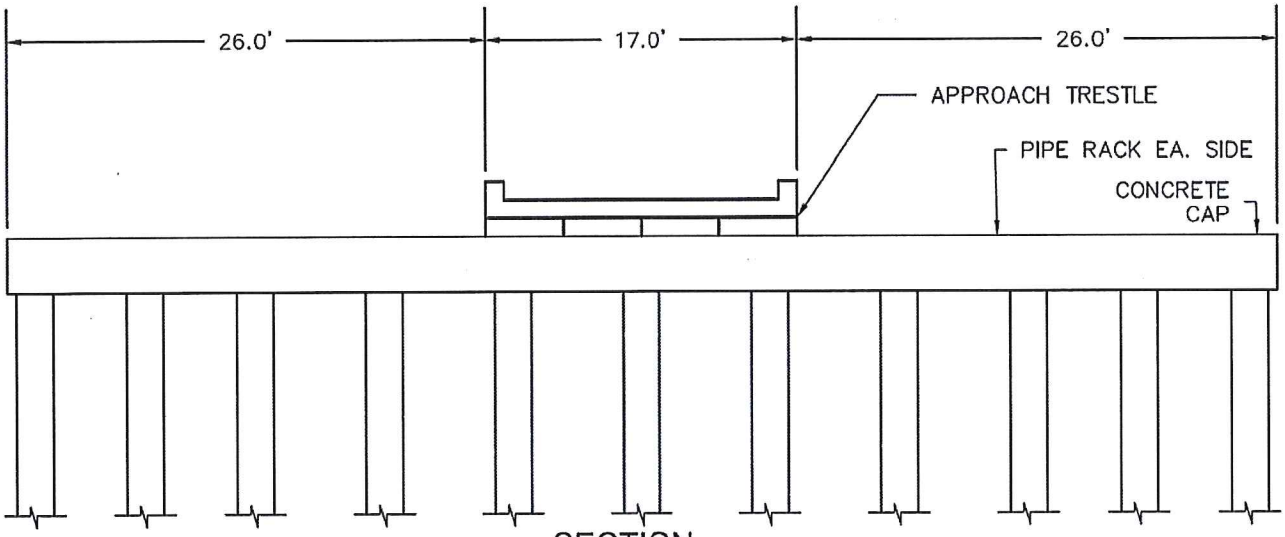

SECTION
SCALE 1"=10'

PURPOSE:	TYPICAL APPROACH & PIPE TRESTLE PLAN & SECTION	OWNER:	MAGELLAN TERMINAL HOLDINGS, LP	LLOYD ENGINEERING, INC HOUSTON TEXAS, USA LICENSE NO. F-002846	DESIGN BY:	KM
		APPLIED BY:	LLOYD ENGINEERING		DRAWN BY:	RHG
		APPLIC. No:	SWG-2016-00635		SCALE:	1"=10'
LOCATION:	SHIP DOCKS PASADENNA, TX	COUNTY:	HARRIS		DATE:	9/27/2016
		WATER BODY:	HOUSTON SHIP CHANNEL		SHEET No:	14
		DATUM:	MLLW			

OCT 3 1 2016

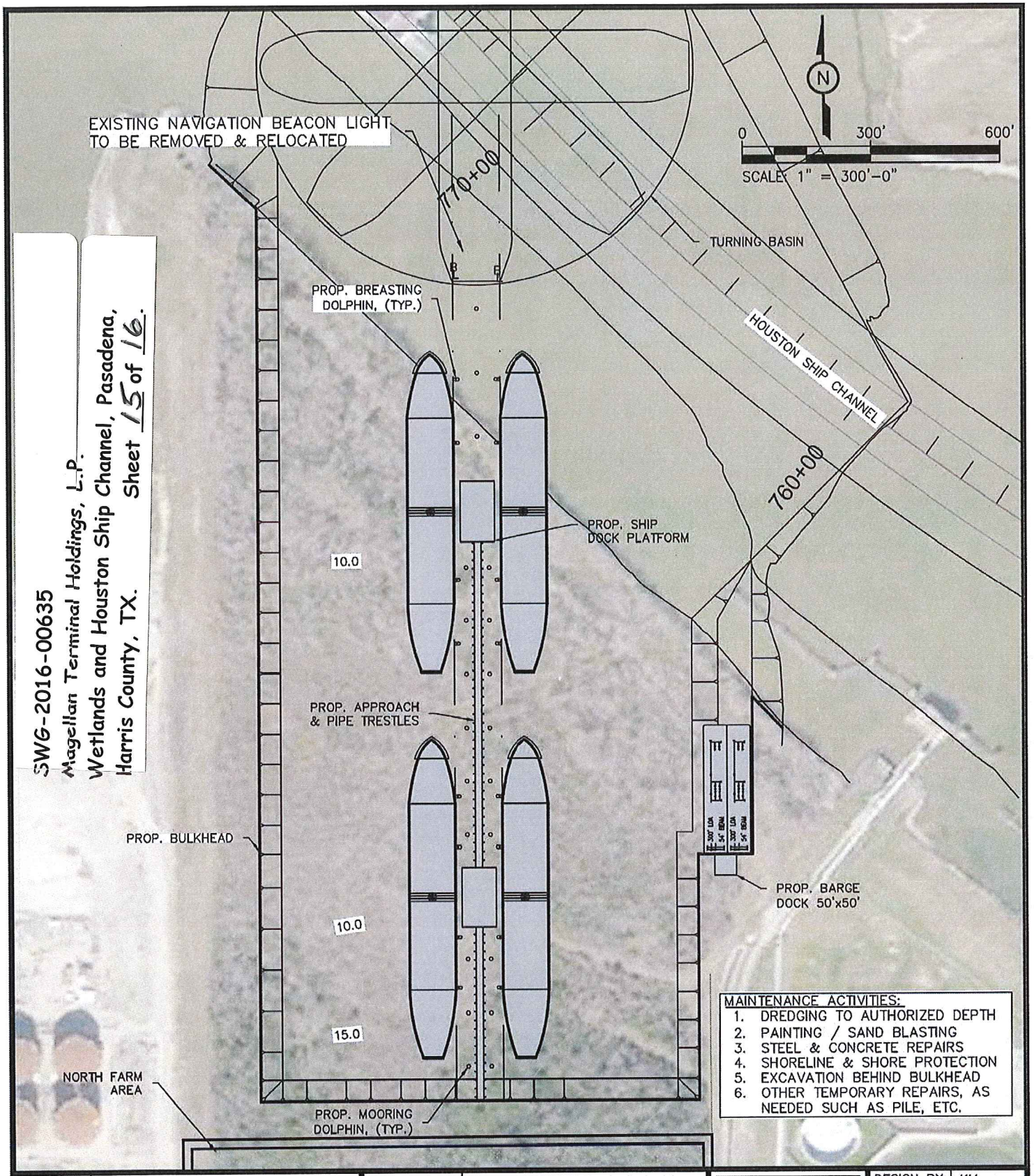

SWG-2016-00635
Magellan Terminal Holdings, L.P.
Wetlands and Houston Ship Channel, Pasadena,
Harris County, TX.
Sheet 15 of 16.

MAINTENANCE ACTIVITIES:
1. DREDGING TO AUTHORIZED DEPTH
2. PAINTING / SAND BLASTING
3. STEEL & CONCRETE REPAIRS
4. SHORELINE & SHORE PROTECTION
5. EXCAVATION BEHIND BULKHEAD
6. OTHER TEMPORARY REPAIRS, AS NEEDED SUCH AS PILE, ETC.

PURPOSE:	MAINTENANCE ACTIVITIES	OWNER:	MAGELLAN TERMINAL HOLDINGS, LP	LLOYD ENGINEERING, INC HOUSTON TEXAS, USA LICENSE NO. F-002846	DESIGN BY:	KM
		APPLIED BY:	LLOYD ENGINEERING		DRAWN BY:	RHG
		APPLIC. No:	SWG-2016-00635		SCALE:	1"=300'
LOCATION:	SHIP DOCKS PASADENNA, TX	COUNTY:	HARRIS		DATE:	9/27/2016
		WATER BODY:	HOUSTON SHIP CHANNEL		SHEET No:	15
		DATUM:	MLLW			

NOV 0 7 2016

SWG-2016-00635
Magellan Terminal Holdings, L.P.
Wetlands and Houston Ship Channel, Pasadena,
Harris County, TX. Sheet 16 of 16.

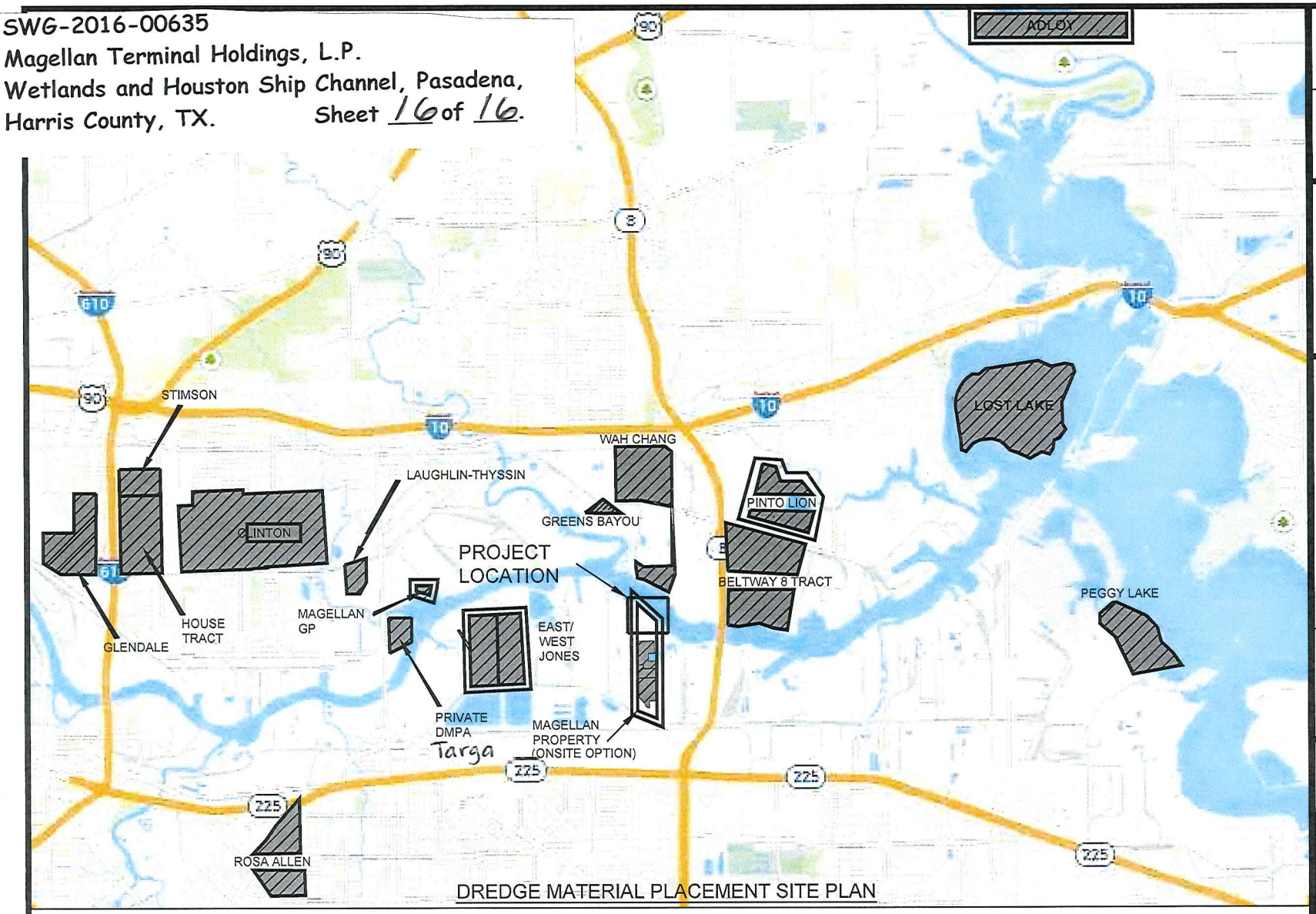

DREDGE MATERIAL PLACEMENT SITE PLAN

PROPOSED PLACEMENT AREAS (FOR NEW WORK AND/OR MAINTENANCE DREDGING):

1. EAST/WEST JONES (ORION)
2. GREENS BAYOU
3. PINTO LION – PRIVATE
4. ADLOY – PRIVATE
5. BELTWAY 8 TRACT
6. WAH CHANG
7. STIMSON TRACT
8. HOUSE TRACT
9. GLENDALE
10. ROSA ALLEN
11. CLINTON
12. LOST LAKE
13. PEGGY LAKE
14. LAUGHLIN–THYSSIN
15. PRIVATE DMPA – Targa
16. MAGELLAN GP
17. ON SITE

DREDGE MATERIAL PLACEMENT AREAS FOR CONSTRUCTION AND MAINTENANCE DREDGING.

DREDGE PLACEMENT AREAS FOR MAINTENANCE DREDGING ONLY

DESIGN BY:	KM
DRAWN BY:	RHG
SCALE:	N.T.S.
DATE:	9/27/2016
SHEET No:	16

LLOYD ENGINEERING, INC
HOUSTON TEXAS, USA
LICENSE NO. F-002846

OWNER:	MAGELLAN TERMINAL HOLDINGS, LP
APPLIED BY:	LLOYD ENGINEERING
APPLIC. No:	SWG-2016-00635
COUNTY:	HARRIS
WATER BODY:	HOUSTON SHIP CHANNEL
DATUM:	MLLW

PURPOSE: DISPOSABLE SITE LAYOUT

LOCATION: SHIP DOCKS PASADENNA, TX