SEP 0 1 2017

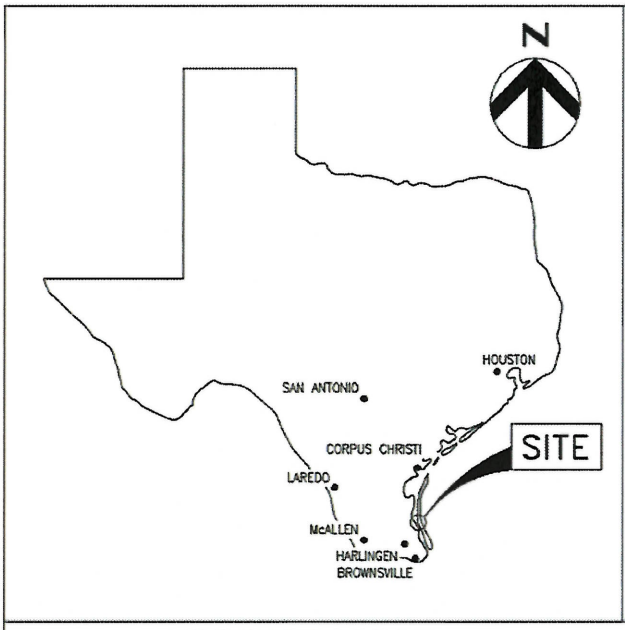

VICINITY MAP

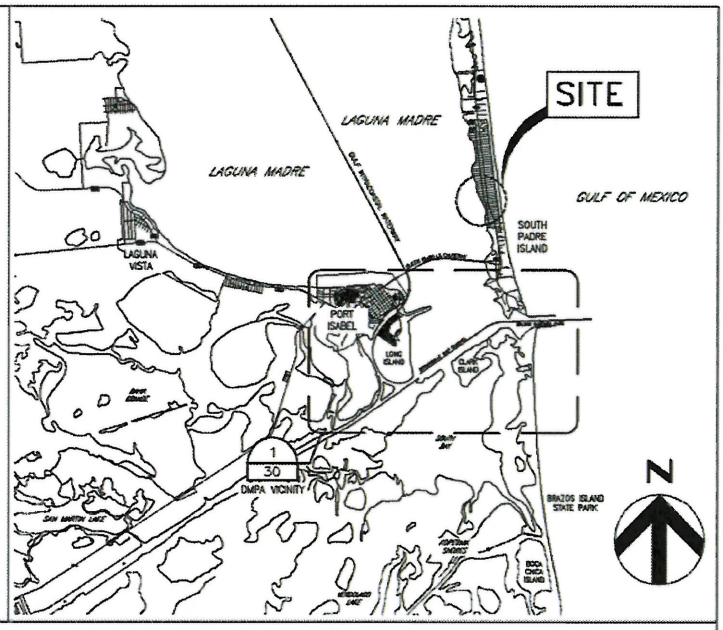

LOCATION MAP

FOR COE USE ONLY
Permit Application No.:
Applicant Name:
Sheet ____ of ____

HDR
Texas P.E. Firm Registration No. F-754

ACTIVITY: SKIPJACK PROPERTIES, LLC – MARINA RENOVATION

APPLICANT: SKIPJACK PROPERTIES, LLC — DATUM:

DATE: 08/2017 — REV. DATE:

HDR JOB NO: 10042749 — SHEET 1 OF 31

OVERALL EXISTING SITE PLAN (1/1)

SCALE: 1" = 100'

THIS DRAWING IS FOR REGULATORY PURPOSES ONLY AND IS NOT TO BE USED FOR BIDDING OR CONSTRUCTION

FOR COE USE ONLY
Permit Application No.:
Applicant Name:
Sheet ____ of ____

HDR
Texas P.E. Firm Registration No. F-754

ACTIVITY: SKIPJACK PROPERTIES, LLC – MARINA RENOVATION	
APPLICANT: SKIPJACK PROPERTIES, LLC	DATUM:
DATE: 08/2017	REV. DATE:
HDR JOB NO: 10042749	SHEET 2 OF 31

2 of 31; SWG-1992-01693
SEP 01 2017

EXISTING BATHYMETRY PLAN

SCALE: 1" = 100'

THIS DRAWING IS FOR REGULATORY PURPOSES ONLY AND IS NOT TO BE USED FOR BIDDING OR CONSTRUCTION

FOR COE USE ONLY
Permit Application No.:
Applicant Name:
Sheet ____ of ____

HDR
Texas P.E. Firm Registration No. F-754

ACTIVITY: SKIPJACK PROPERTIES, LLC – MARINA RENOVATION	
APPLICANT: SKIPJACK PROPERTIES, LLC	DATUM: MLT
DATE: 08/2017	REV. DATE:
HDR JOB NO: 10042749	SHEET 3 OF 31

SEP 01 2017

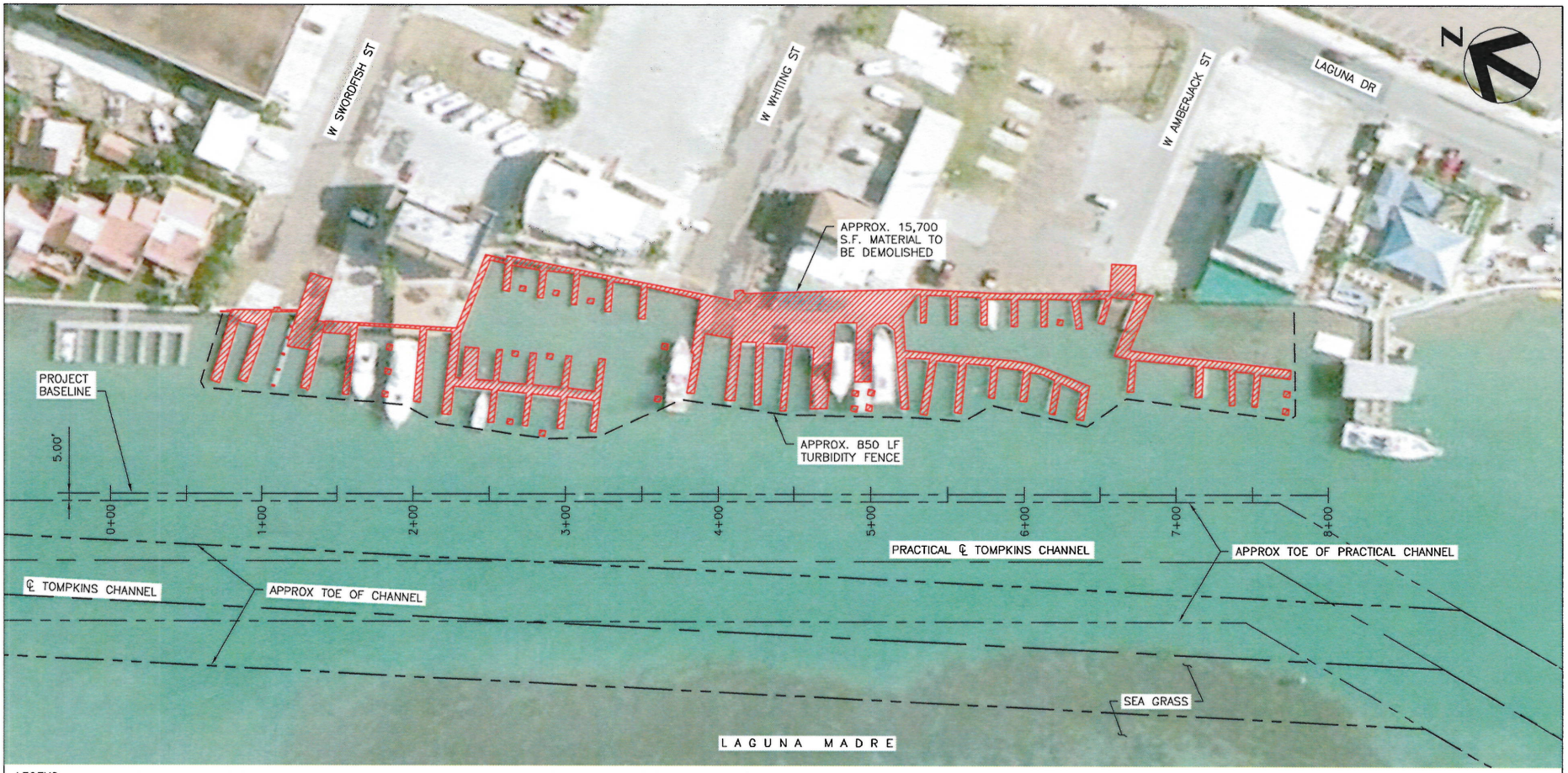

LEGEND:

DEMOLISH (APPROX. 15,700 S.F. MATERIAL TO BE REMOVED)

DEMOLITION PLAN

SCALE: 1" = 100'

1 / 1

DEMOLITION NOTES:

1. ALL MATERIAL SHALL BE PROPERLY DISPOSED IN A REFUSE FACILITY DESIGNATED AND PERMITTED TO RECEIVE SUCH MATERIALS.
2. A FLOATING TURBIDITY FENCE WILL BE INSTALLED AROUND WORK AREA TO PREVENT DEBRIS FROM ENTERING TOMPKINS CHANNEL OR ADJACENT PROPERTY.
3. FLOATS, NETS, TARPS, OR OTHER MEANS WILL BE INSTALLED TO PREVENT FALLING MATERIAL FROM ENTERING THE WATER.
4. PILLING SHALL BE REMOVED BY CRANE. ANY PILING THAT BREAKS, OR CANNOT BE SUCCESSFULLY REMOVED SHALL BE CUT OFF AND REMOVED TO AN ELEVATION BELOW THE NATURAL MUD LINE AS NOTED BELOW:

a. WATER DEPTH > −4.0' (MLLW): CUT PILE FIVE FEET
b. WATER DEPTH <= −4.0' (MLLW): CUT PILE TWO FEET

THIS DRAWING IS FOR REGULATORY PURPOSES ONLY AND IS NOT TO BE USED FOR BIDDING OR CONSTRUCTION

FOR COE USE ONLY
Permit Application No.:
Applicant Name:
Sheet ____ of ____

HDR
Texas P.E. Firm Registration No. F-754

ACTIVITY: SKIPJACK PROPERTIES, LLC – MARINA RENOVATION

APPLICANT: SKIPJACK PROPERTIES, LLC

DATUM:

DATE: 08/2017

REV. DATE:

HDR JOB NO: 10042749

SHEET 4 OF 31

SEP 01 2017

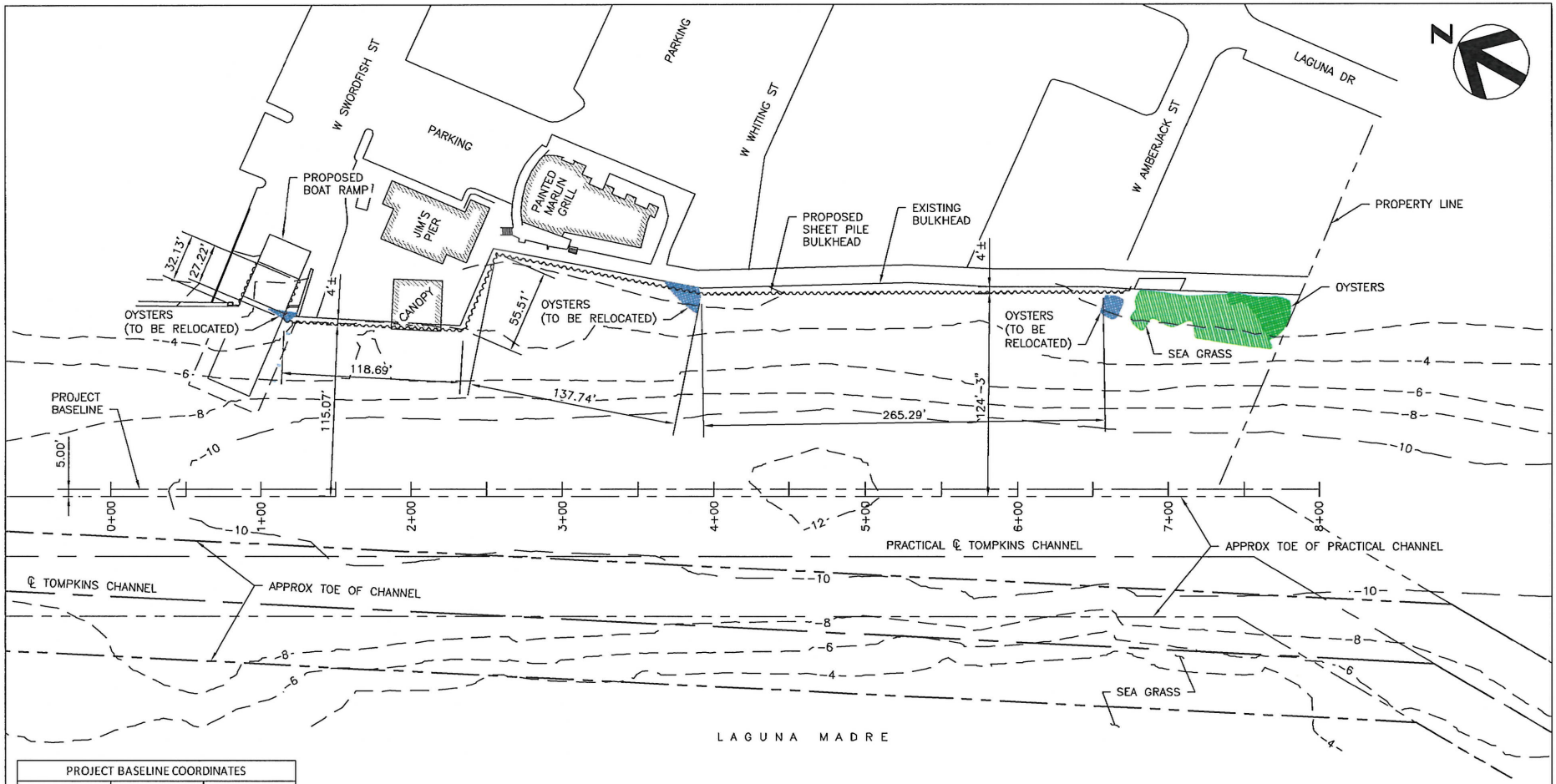

PROJECT BASELINE COORDINATES		
STATION	NORTHING	EASTING
0+00	16,565,610.13	1,420,518.87
8+00	16,564,915.85	1,420,916.33

PROPOSED SHEET PILE BULKHEAD PLAN (1/1)

SCALE: 1" = 100'

BULKHEAD NOTES:

1. EXISTING BULKHEAD SHALL REMAIN IN PLACE AND UNDAMAGED.
2. CONSTRUCTION OF NEW COMPOSITE DOCKS SHALL COMMENCE ONCE BULKHEAD AND DREDGING ARE COMPLETE.

THIS DRAWING IS FOR REGULATORY PURPOSES ONLY AND IS NOT TO BE USED FOR BIDDING OR CONSTRUCTION

FOR COE USE ONLY
Permit Application No.:
Applicant Name:
Sheet ____ of ____

HDR
Texas P.E. Firm Registration No. F-754

ACTIVITY: SKIPJACK PROPERTIES, LLC – MARINA RENOVATION

APPLICANT: SKIPJACK PROPERTIES, LLC — DATUM: MLT

DATE: 08/2017 — REV. DATE:

HDR JOB NO: 10042749 — SHEET 5 OF 31

5 of 31; SWG-1992-01693

SEP 01 2017

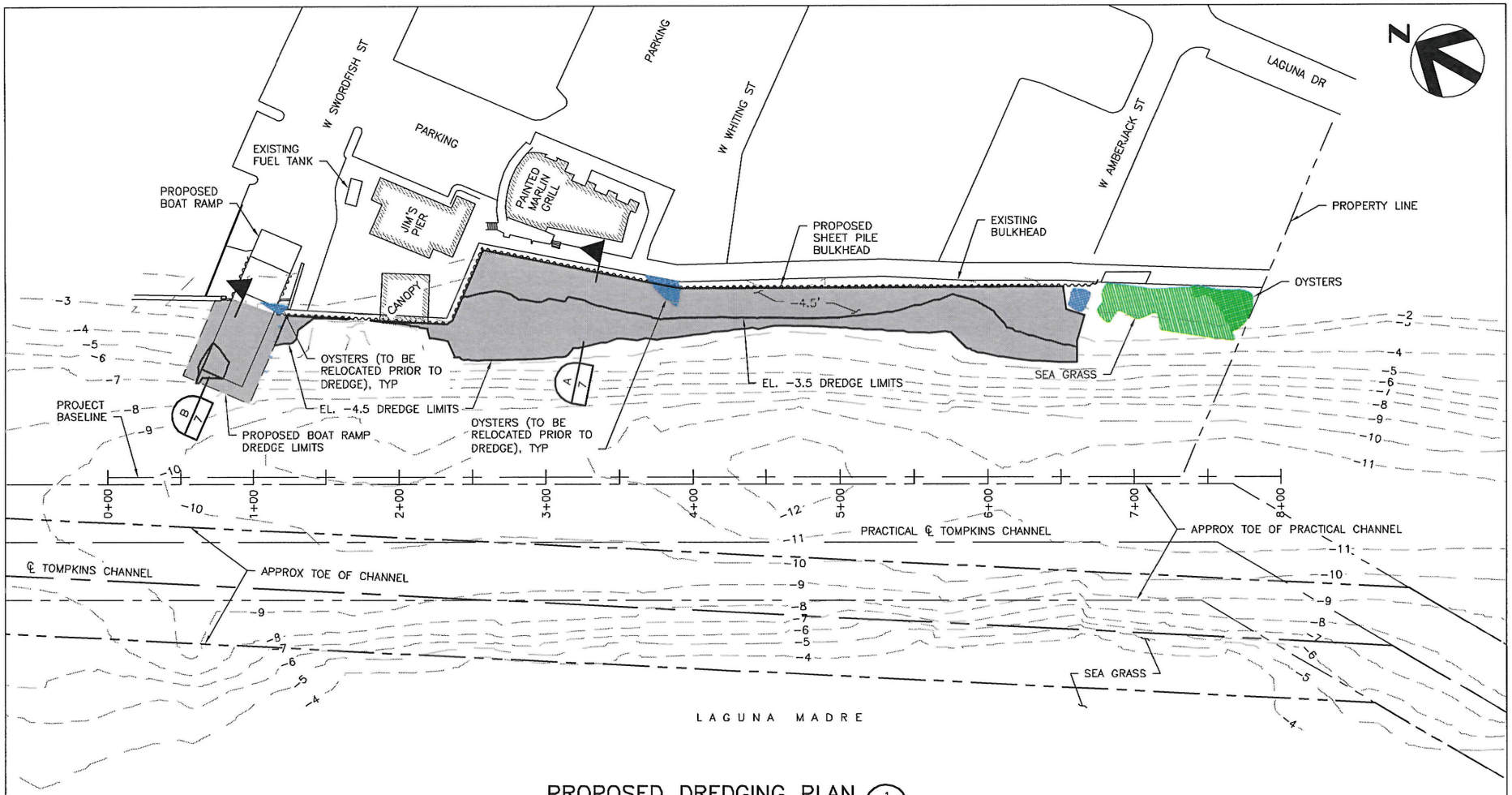

PROPOSED DREDGING PLAN (1/1)

SCALE: 1" = 100'

DREDGE TOTALS:

300 CY DREDGE MATERIAL TO EL. -3.5, 0.23 ACRES

300 CY DREDGE MATERIAL ADVANCED MAINTENANCE TO EL. -4.5, 0.43 ACRES

4.66 CY BOAT RAMP DREDGE MATERIAL TO EL. -7.0 AT 15% SLOPE, 0.07 ACRES

THIS DRAWING IS FOR REGULATORY PURPOSES ONLY AND IS NOT TO BE USED FOR BIDDING OR CONSTRUCTION

FOR COE USE ONLY
Permit Application No.:
Applicant Name:
Sheet ____ of ____

HDR
Texas P.E. Firm Registration No. F-754

ACTIVITY: SKIPJACK PROPERTIES, LLC – MARINA RENOVATION

APPLICANT: SKIPJACK PROPERTIES, LLC — DATUM: MLT

DATE: 08/2017 — REV. DATE:

HDR JOB NO: 10042749 — SHEET 6 OF 31

SEP 01 2017

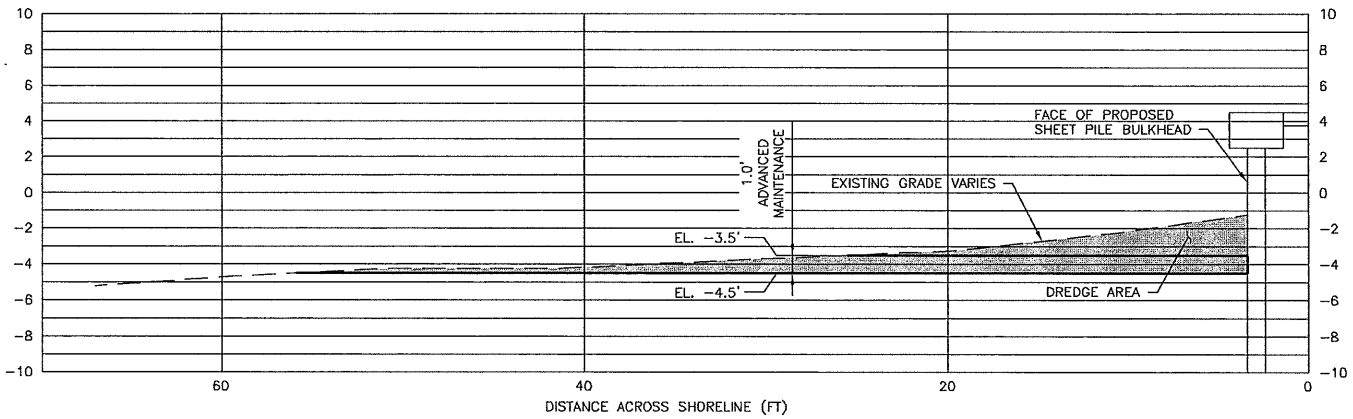

PROPOSED DREDGING SECTION (A/6)

SCALE: 1" = 10'

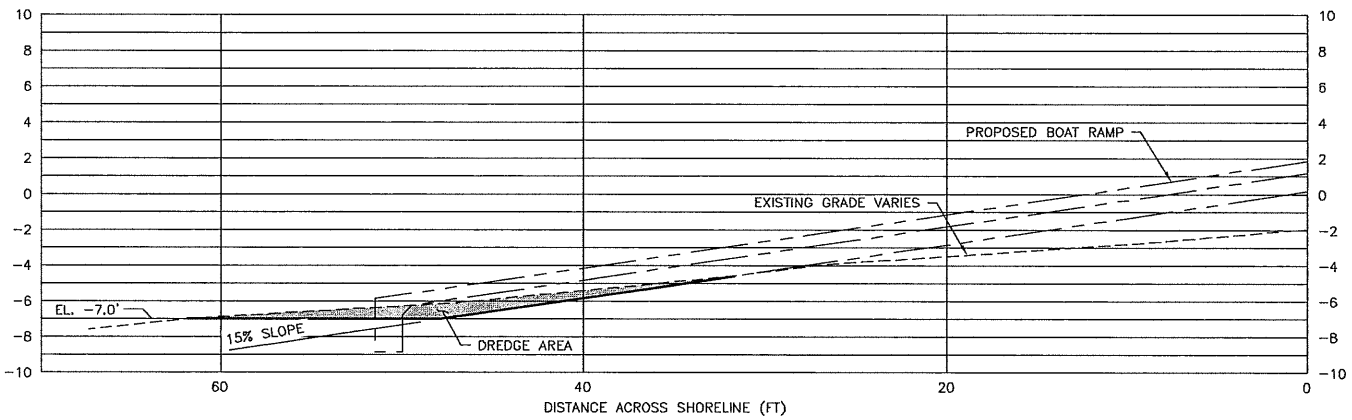

PROPOSED DREDGING SECTION AT BOAT RAMP (B/6)

SCALE: 1" = 10'

THIS DRAWING IS FOR REGULATORY PURPOSES ONLY AND IS NOT TO BE USED FOR BIDDING OR CONSTRUCTION

FOR COE USE ONLY

Permit Application No.: _____

Applicant Name: _____

Sheet ____ of ____

HDR

Texas P.E. Firm Registration No. F-754

ACTIVITY: SKIPJACK PROPERTIES, LLC – MARINA RENOVATION

APPLICANT: SKIPJACK PROPERTIES, LLC

DATUM: MLT

DATE: 08/2017

REV. DATE:

HDR JOB NO: 10042749

SHEET 7 OF 31

7 of 31; SWG-1992-01693

SEP 01 2017

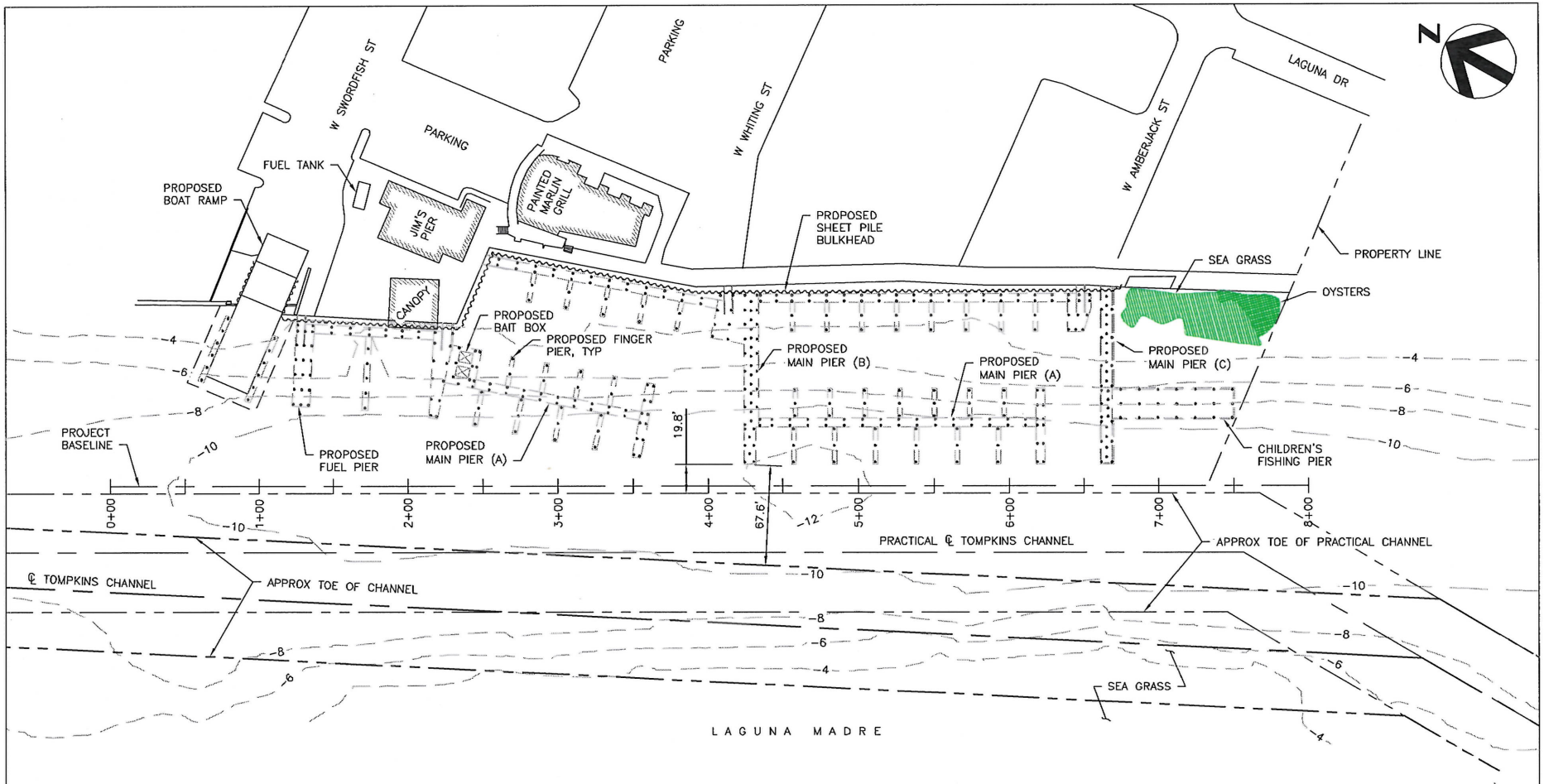

PROPOSED PILE PLAN

SCALE: 1" = 100'

THIS DRAWING IS FOR REGULATORY PURPOSES ONLY AND IS NOT TO BE USED FOR BIDDING OR CONSTRUCTION

FOR COE USE ONLY
Permit Application No.:
Applicant Name:
Sheet ____ of ____

HDR
Texas P.E. Firm Registration No. F-754

ACTIVITY: SKIPJACK PROPERTIES, LLC – MARINA RENOVATION	
APPLICANT: SKIPJACK PROPERTIES, LLC	DATUM: MLT
DATE: 08/2017	REV. DATE:
HDR JOB NO: 10042749	SHEET 8 OF 31

8 of 31; SWG-1992-01693

SEP 01 2017

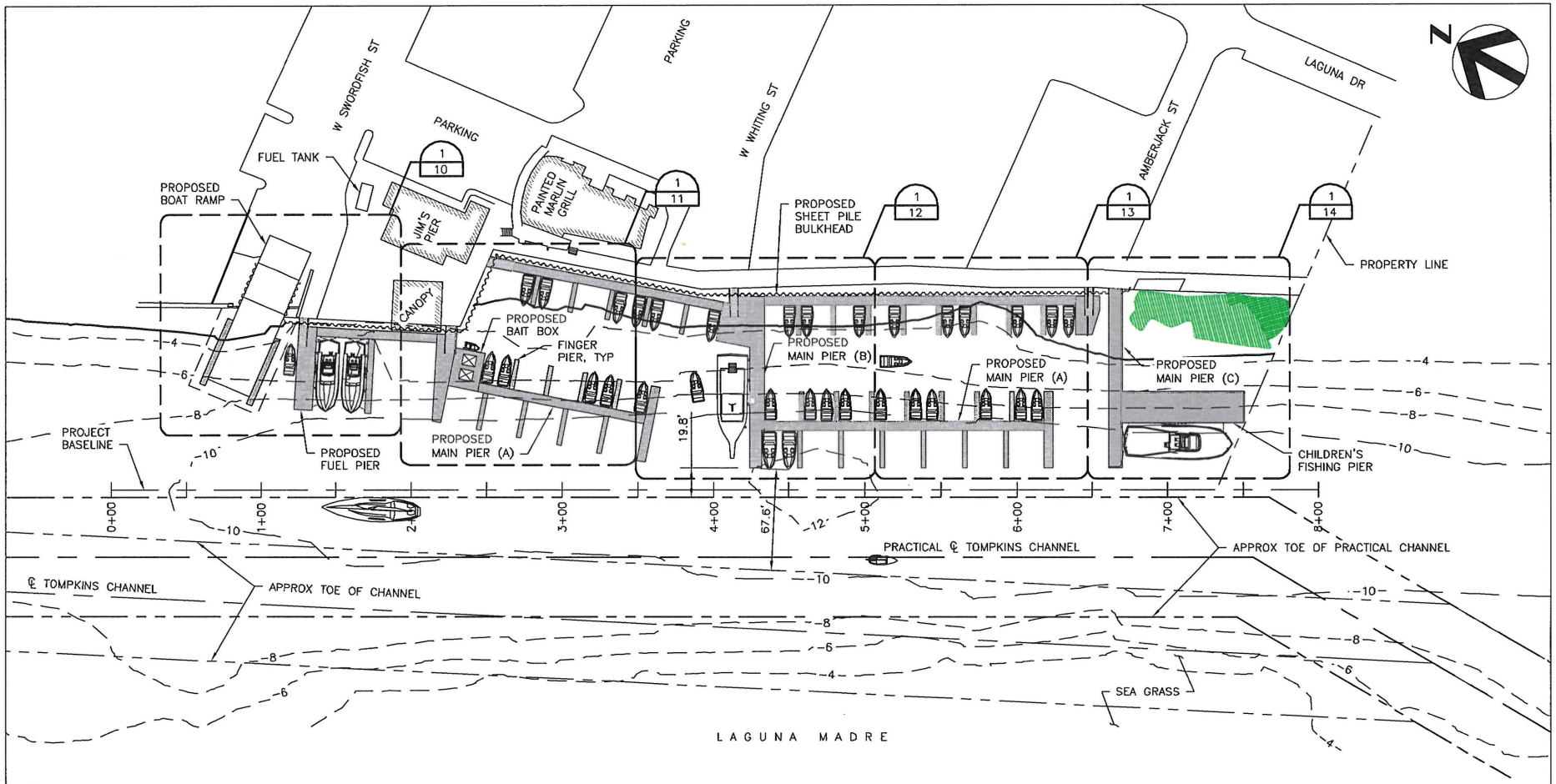

OVERALL PROPOSED SITE PLAN (1/1)

SCALE: 1" = 100'

THIS DRAWING IS FOR REGULATORY PURPOSES ONLY AND IS NOT TO BE USED FOR BIDDING OR CONSTRUCTION

FOR COE USE ONLY
Permit Application No.:
Applicant Name:
Sheet ____ of ____

HDR
Texas P.E. Firm Registration No. F-754

ACTIVITY: SKIPJACK PROPERTIES, LLC – MARINA RENOVATION

APPLICANT: SKIPJACK PROPERTIES, LLC — DATUM: MLT

DATE: 08/2017 — REV. DATE:

HDR JOB NO: 10042749 — SHEET 9 OF 31

SEP 01 2017

SEP 0 1 2017

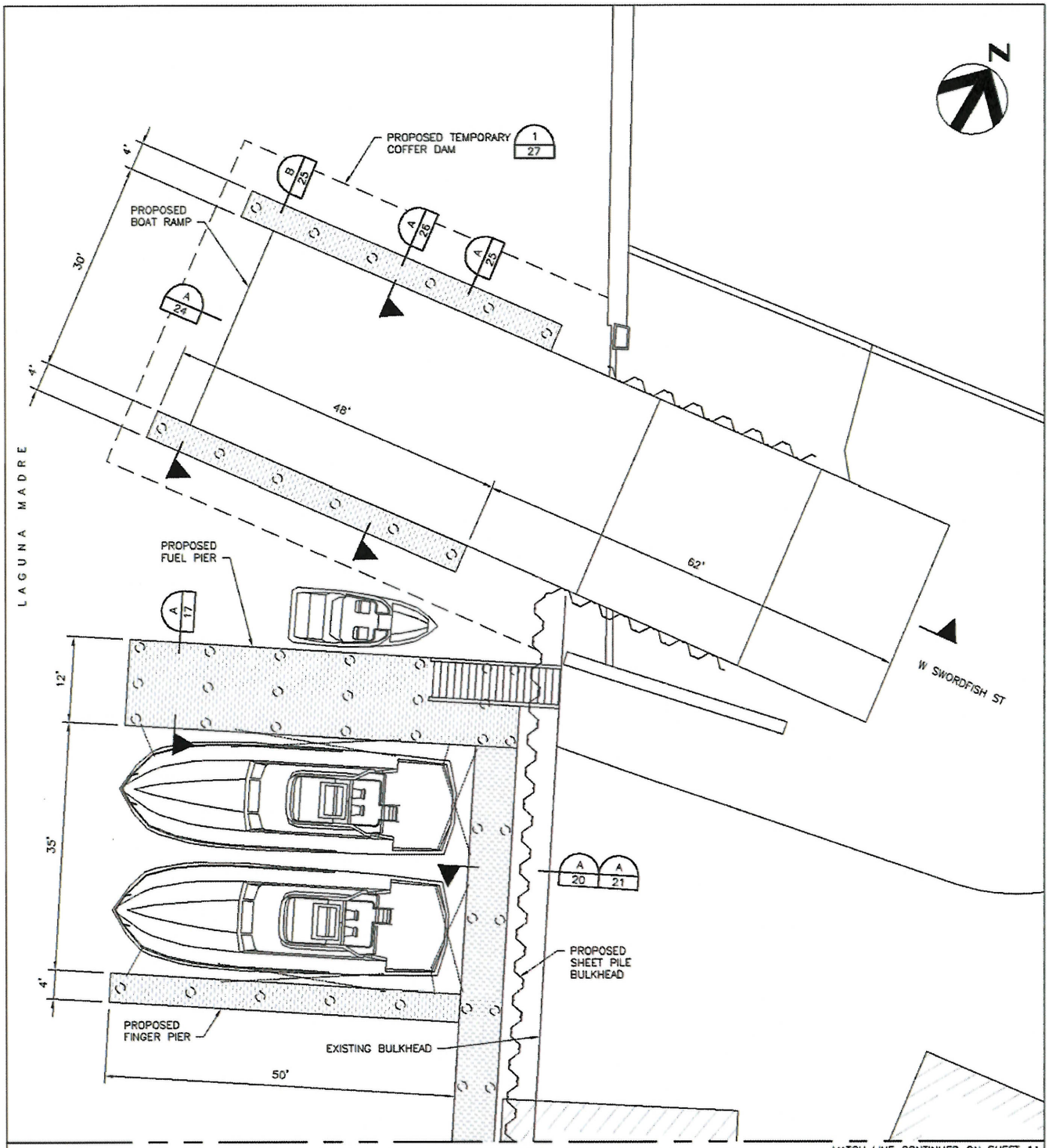

ENLARGED PROPOSED SITE PLAN I (1/9)

SCALE: 1" = 20'

FOR COE USE ONLY
Permit Application No.:
Applicant Name:
Sheet ____ of ____

HDR
Texas P.E. Firm Registration No. F-754

ACTIVITY: SKIPJACK PROPERTIES, LLC – MARINA RENOVATION	
APPLICANT: SKIPJACK PROPERTIES, LLC	DATUM:
DATE: 08/2017	REV. DATE:
HDR JOB NO: 10042749	SHEET 10 OF 31

SEP 01 2017

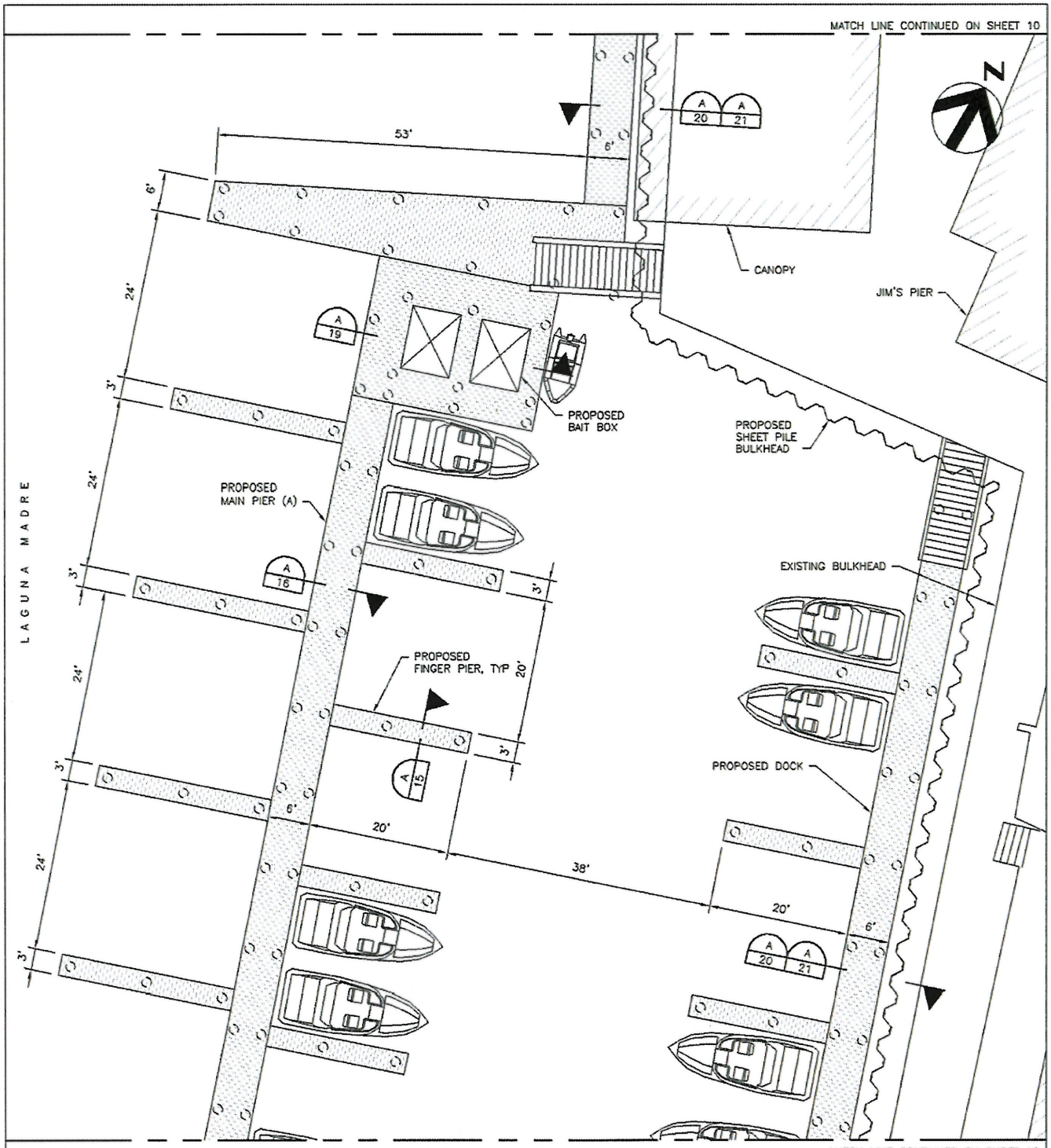

ENLARGED PROPOSED SITE PLAN II (1/9)

SCALE: 1" = 20'

FOR COE USE ONLY
Permit Application No.:
Applicant Name:
Sheet ____ of ____

HDR
Texas P.E. Firm Registration No. F-754

ACTIVITY: SKIPJACK PROPERTIES, LLC – MARINA RENOVATION	
APPLICANT: SKIPJACK PROPERTIES, LLC	DATUM:
DATE: 08/2017	REV. DATE:
HDR JOB NO: 10042749	SHEET 11 OF 31

SEP 01 2017

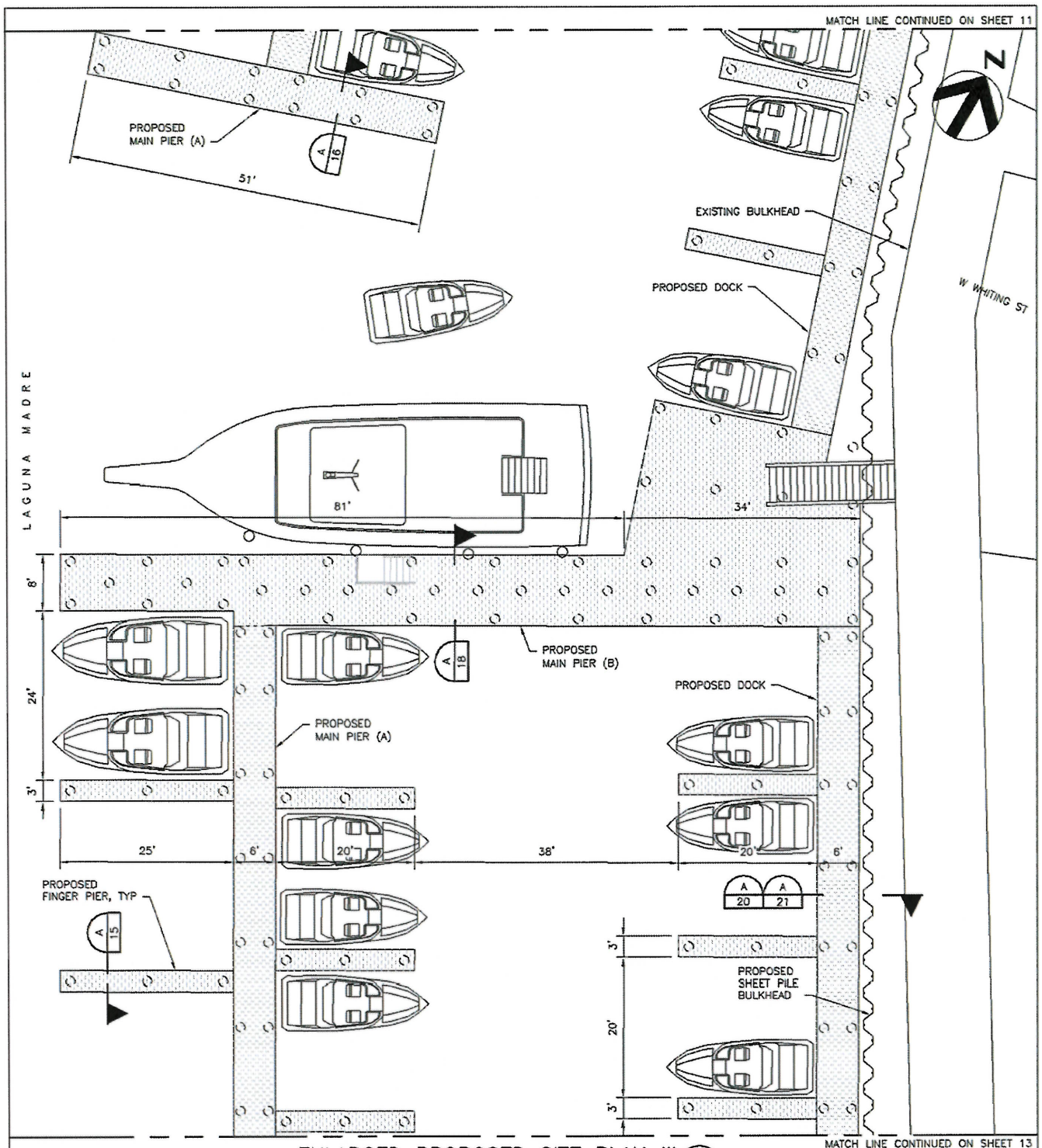

ENLARGED PROPOSED SITE PLAN III (1/9)

SCALE: 1" = 20'

FOR COE USE ONLY

Permit Application No.:

Applicant Name:

Sheet ____ of ____

HDR

Texas P.E. Firm Registration No. F-754

ACTIVITY: SKIPJACK PROPERTIES, LLC – MARINA RENOVATION

APPLICANT: SKIPJACK PROPERTIES, LLC

DATUM:

DATE: 08/2017

REV. DATE:

HDR JOB NO: 10042749

SHEET 12 OF 31

SEP 0 1 2017

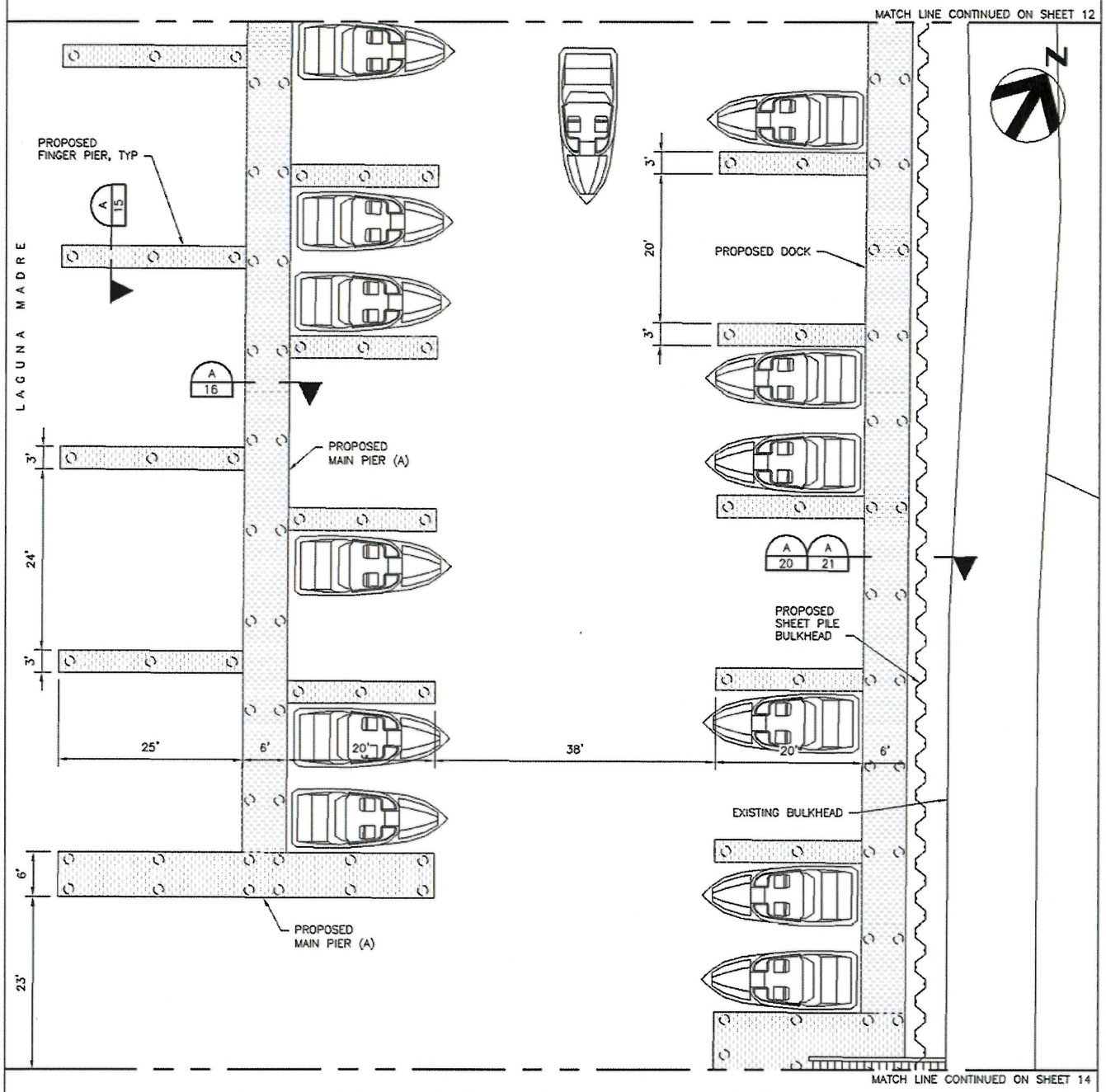

ENLARGED PROPOSED SITE PLAN IV (1/9)

SCALE: 1" = 20'

FOR COE USE ONLY
Permit Application No.:
Applicant Name:
Sheet ____ of ____

HDR
Texas P.E. Firm Registration No. F-754

ACTIVITY: SKIPJACK PROPERTIES, LLC – MARINA RENOVATION	
APPLICANT: SKIPJACK PROPERTIES, LLC	DATUM:
DATE: 08/2017	REV. DATE:
HDR JOB NO: 10042749	SHEET 13 OF 31

SEP 0 1 2017

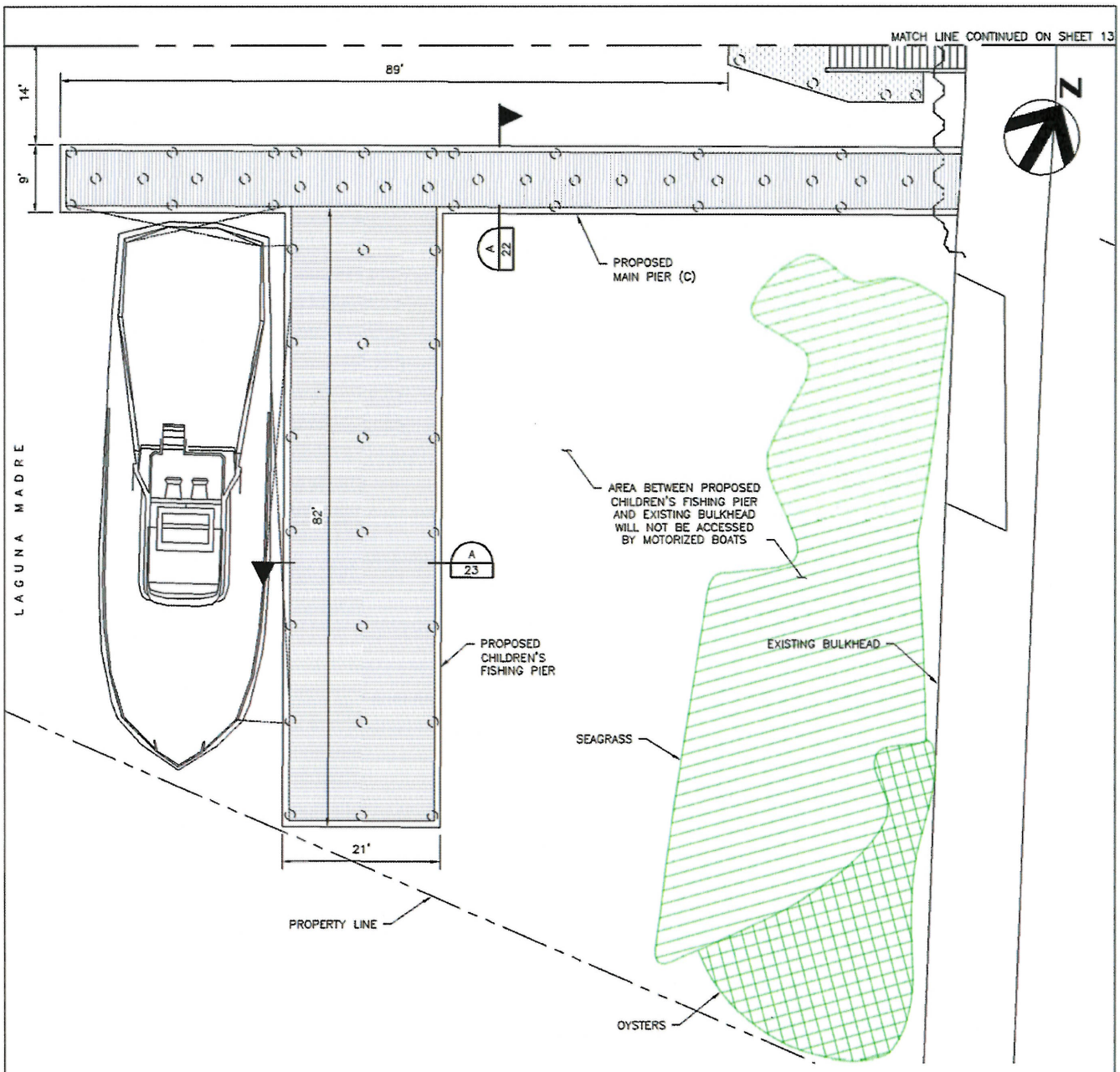

ENLARGED PROPOSED SITE PLAN V (1/9)

SCALE: 1" = 20'

FOR COE USE ONLY
Permit Application No.:
Applicant Name:
Sheet ____ of ____

HDR
Texas P.E. Firm Registration No. F-754

ACTIVITY: SKIPJACK PROPERTIES, LLC – MARINA RENOVATION	
APPLICANT: SKIPJACK PROPERTIES, LLC	DATUM:
DATE: 08/2017	REV. DATE:
HDR JOB NO: 10042749	SHEET 14 OF 31

SEP 01 2017

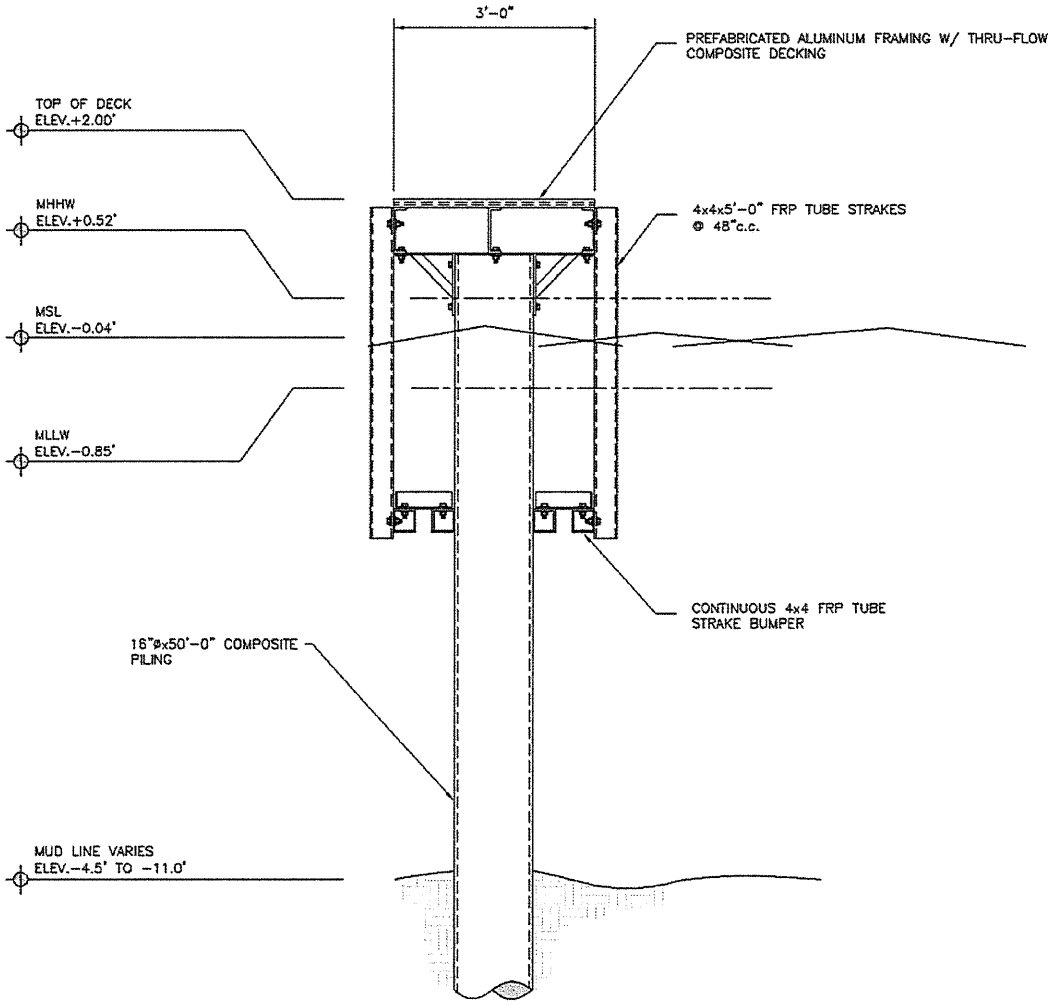

TYPICAL FINGER PIER SECTION (A / 11)

SCALE: 3/8" = 1'-0"

FOR COE USE ONLY
Permit Application No.:
Applicant Name:
Sheet ____ of ____

HDR
Texas P.E. Firm Registration No. F-754

ACTIVITY: SKIPJACK PROPERTIES, LLC – MARINA RENOVATION	
APPLICANT: SKIPJACK PROPERTIES, LLC	DATUM: MLT
DATE: 08/2017	REV. DATE:
HDR JOB NO: 10042749	SHEET 15 OF 31

SEP 0 1 2017

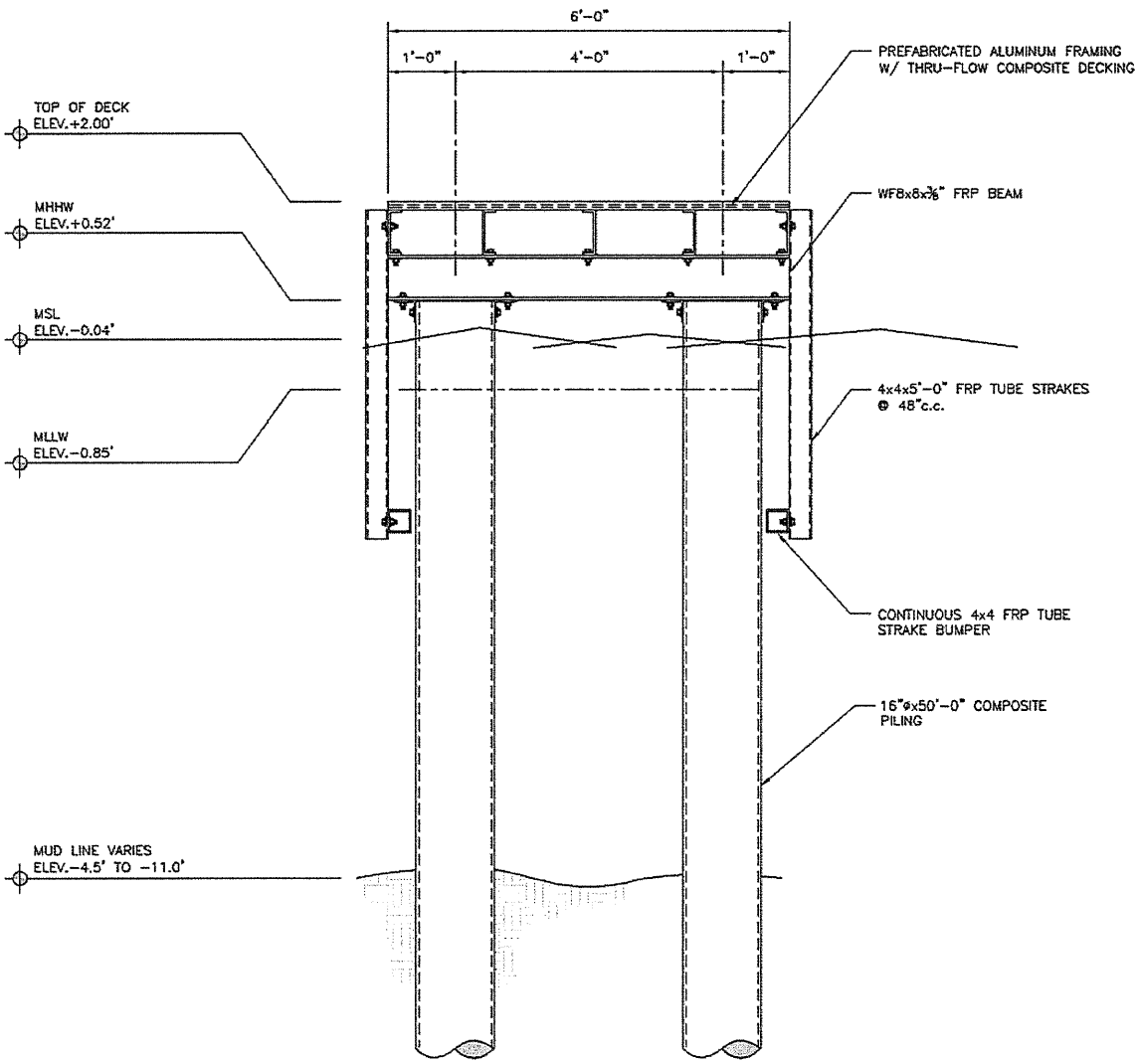

MAIN PIER (A) SECTION (A/11)

SCALE: 3/8" = 1'-0"

FOR COE USE ONLY
Permit Application No.:_____
Applicant Name:_____
Sheet ____ of ____

HDR
Texas P.E. Firm Registration No. F-754

ACTIVITY: SKIPJACK PROPERTIES, LLC – MARINA RENOVATION	
APPLICANT: SKIPJACK PROPERTIES, LLC	DATUM: MLT
DATE: 08/2017	REV. DATE:
HDR JOB NO: 10042749	SHEET 16 OF 31

SEP 0 1 2017

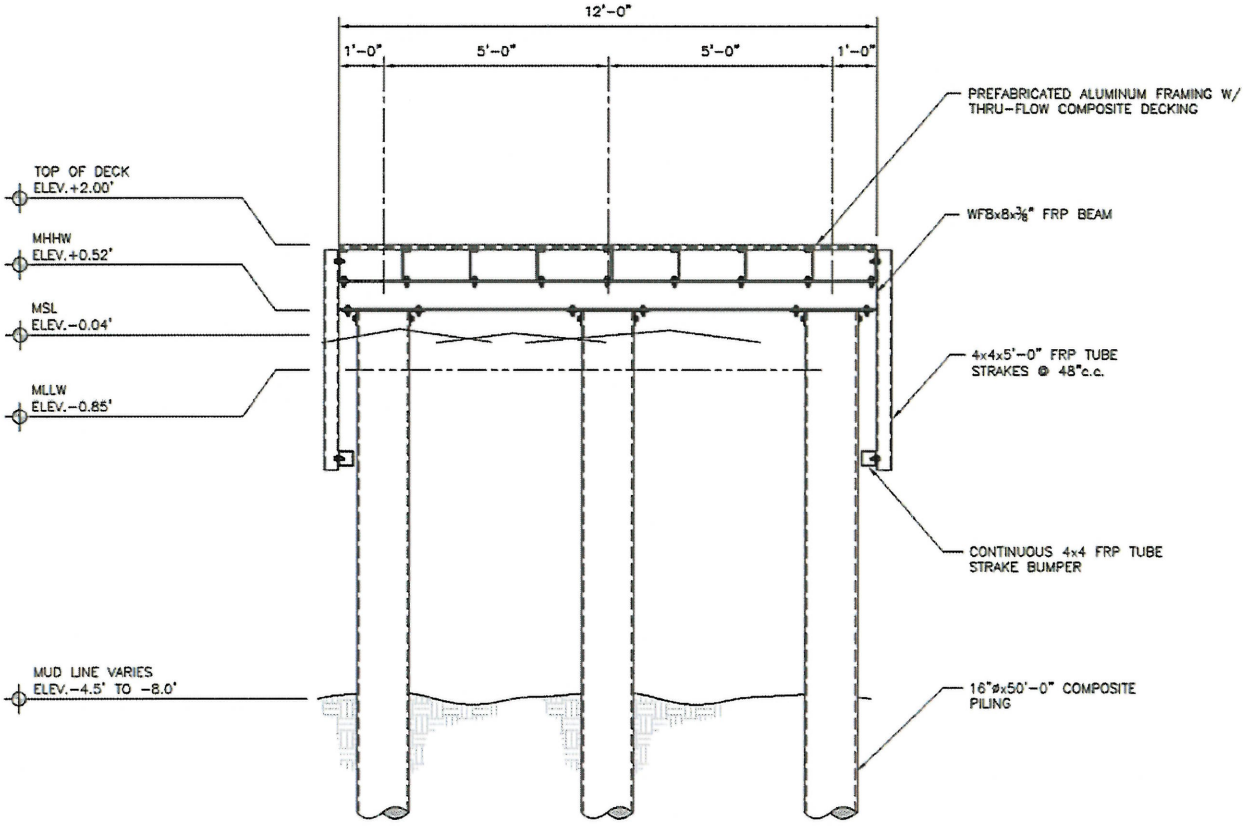

FUEL PIER SECTION (A / 12)

SCALE: 1/4" = 1'-0"

FOR COE USE ONLY
Permit Application No.:_____
Applicant Name:_____
Sheet ____ of ____

HDR
Texas P.E. Firm Registration No. F-754

ACTIVITY: SKIPJACK PROPERTIES, LLC – MARINA RENOVATION	
APPLICANT: SKIPJACK PROPERTIES, LLC	DATUM: MLT
DATE: 08/2017	REV. DATE:
HDR JOB NO: 10042749	SHEET 17 OF 31

SEP 0 1 2017

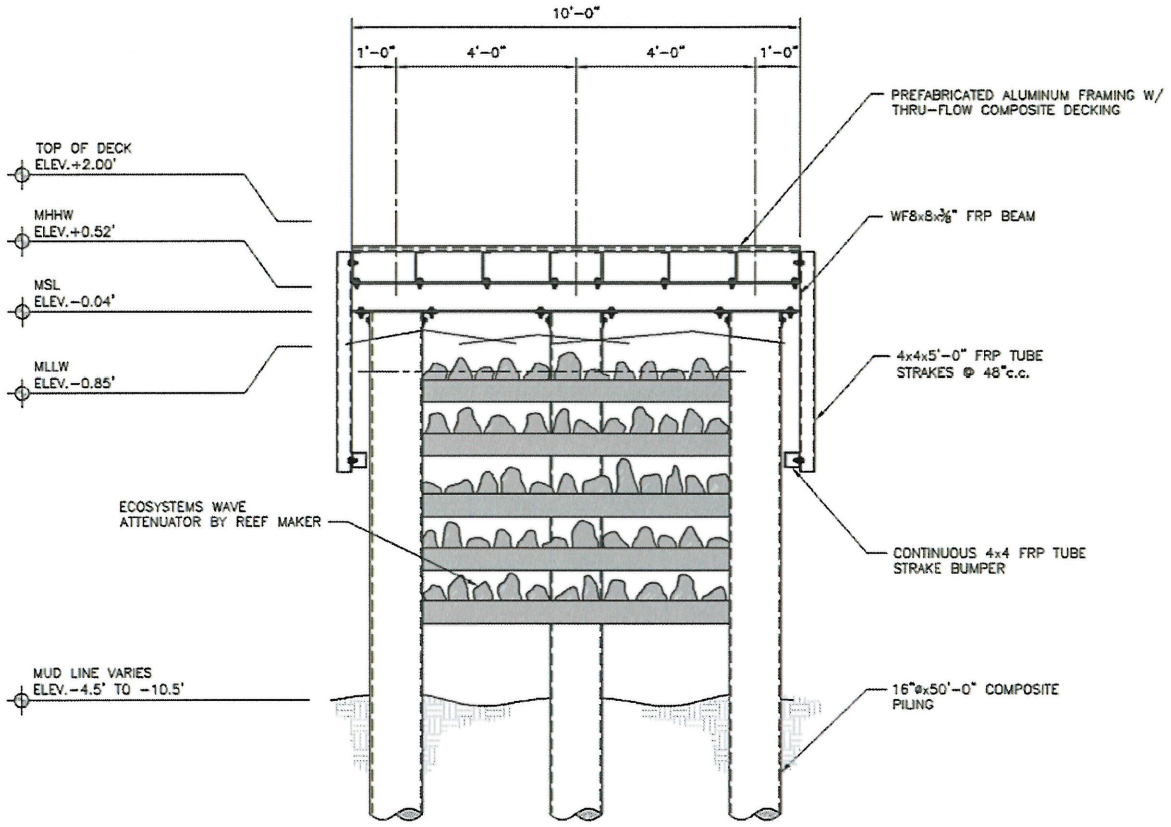

MAIN PIER (B) SECTION A/12

SCALE: 1/4" = 1'-0"

FOR COE USE ONLY
Permit Application No.:
Applicant Name:
Sheet ____ of ____

HDR
Texas P.E. Firm Registration No. F-754

ACTIVITY: SKIPJACK PROPERTIES, LLC – MARINA RENOVATION	
APPLICANT: SKIPJACK PROPERTIES, LLC	DATUM: MLT
DATE: 08/2017	REV. DATE:
HDR JOB NO: 10042749	SHEET 18 OF 31

SEP 0 1 2017

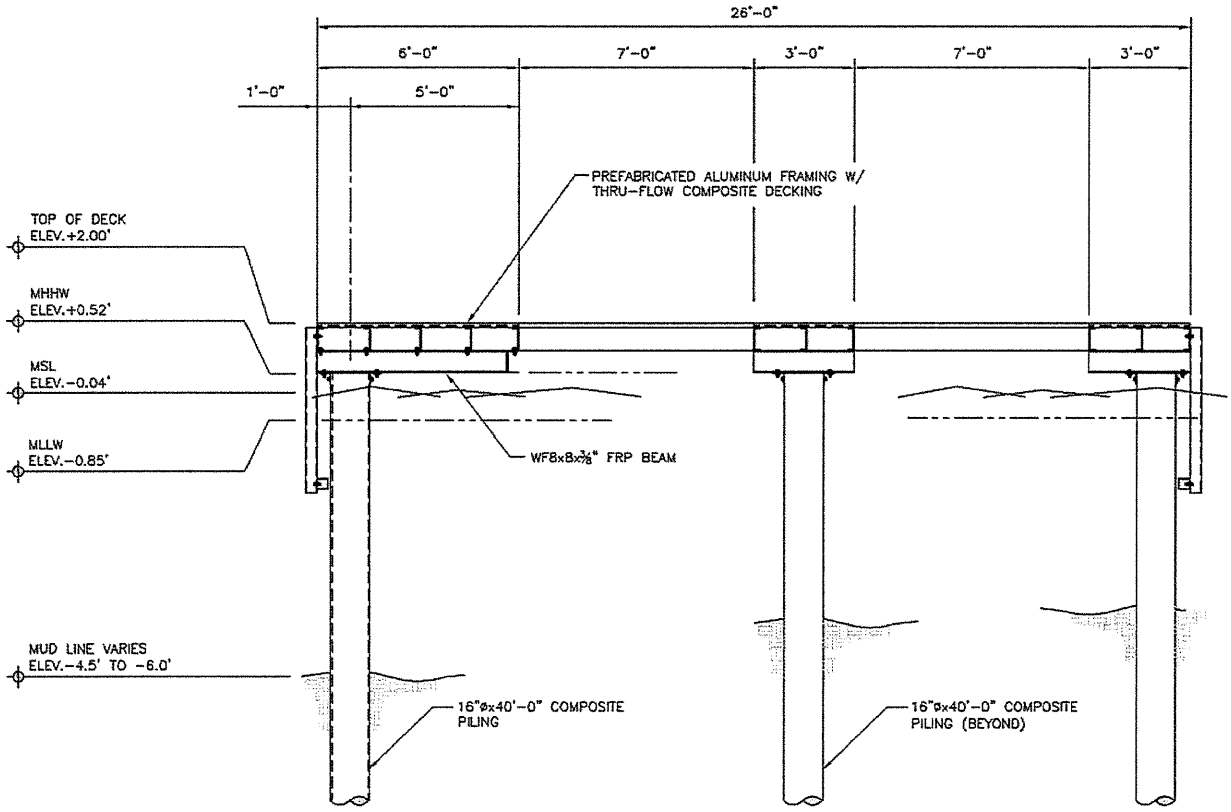

BAIT BOX SECTION (A / 11)
SCALE: 3/16" = 1'-0"

FOR COE USE ONLY
Permit Application No.:
Applicant Name:
Sheet ____ of ____

HDR
Texas P.E. Firm Registration No. F-754

ACTIVITY: SKIPJACK PROPERTIES, LLC – MARINA RENOVATION	
APPLICANT: SKIPJACK PROPERTIES, LLC	DATUM: MLT
DATE: 08/2017	REV. DATE:
HDR JOB NO: 10042749	SHEET 19 OF 31

SEP 0 1 2017

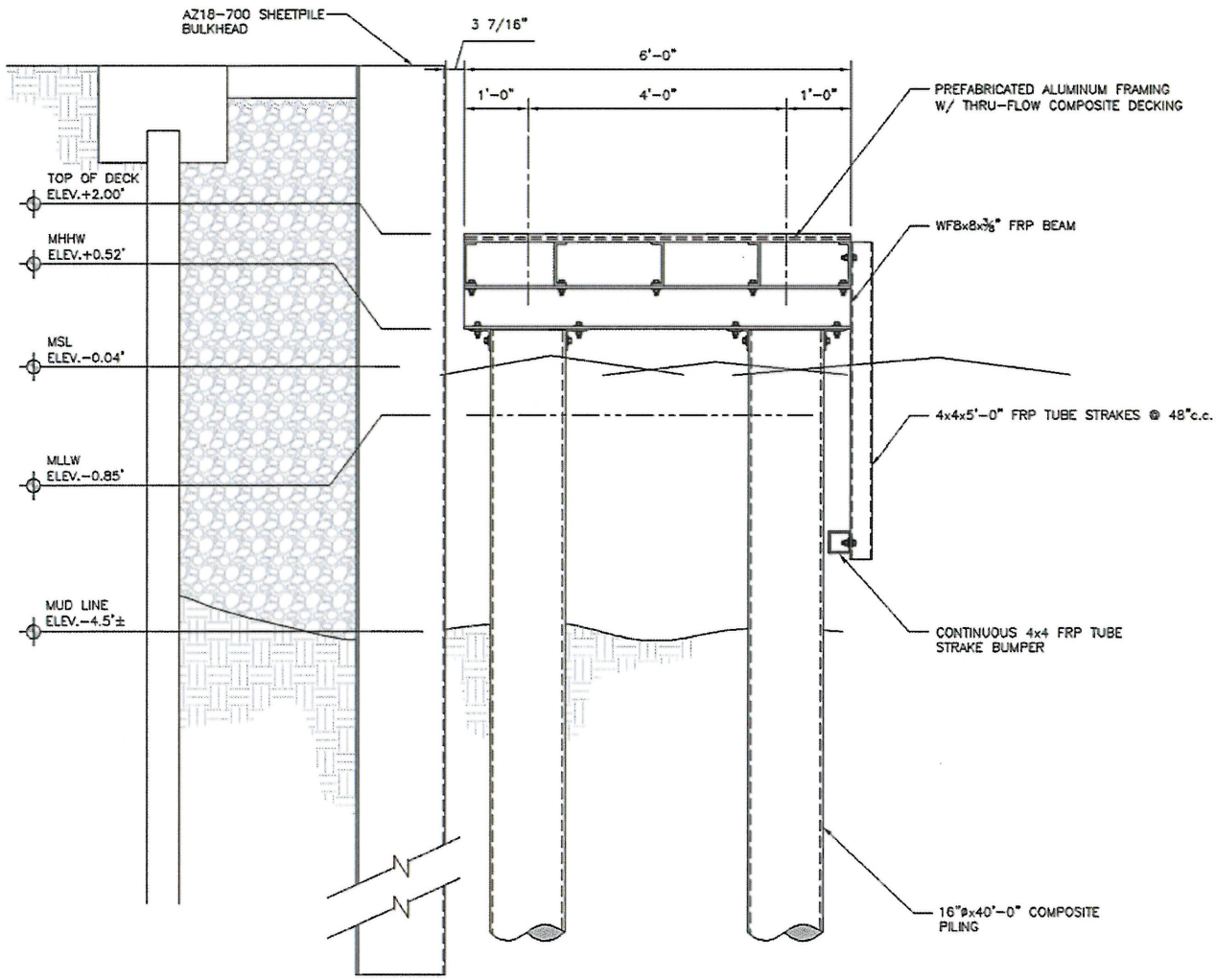

DOCK SECTION AT BULKHEAD (A / 10)

SCALE: 3/8" = 1'-0"

FOR COE USE ONLY
Permit Application No.:
Applicant Name:
Sheet ____ of ____

HDR
Texas P.E. Firm Registration No. F-754

ACTIVITY: SKIPJACK PROPERTIES, LLC – MARINA RENOVATION	
APPLICANT: SKIPJACK PROPERTIES, LLC	DATUM: MLT
DATE: 08/2017	REV. DATE:
HDR JOB NO: 10042749	SHEET 20 OF 31

SEP 0 1 2017

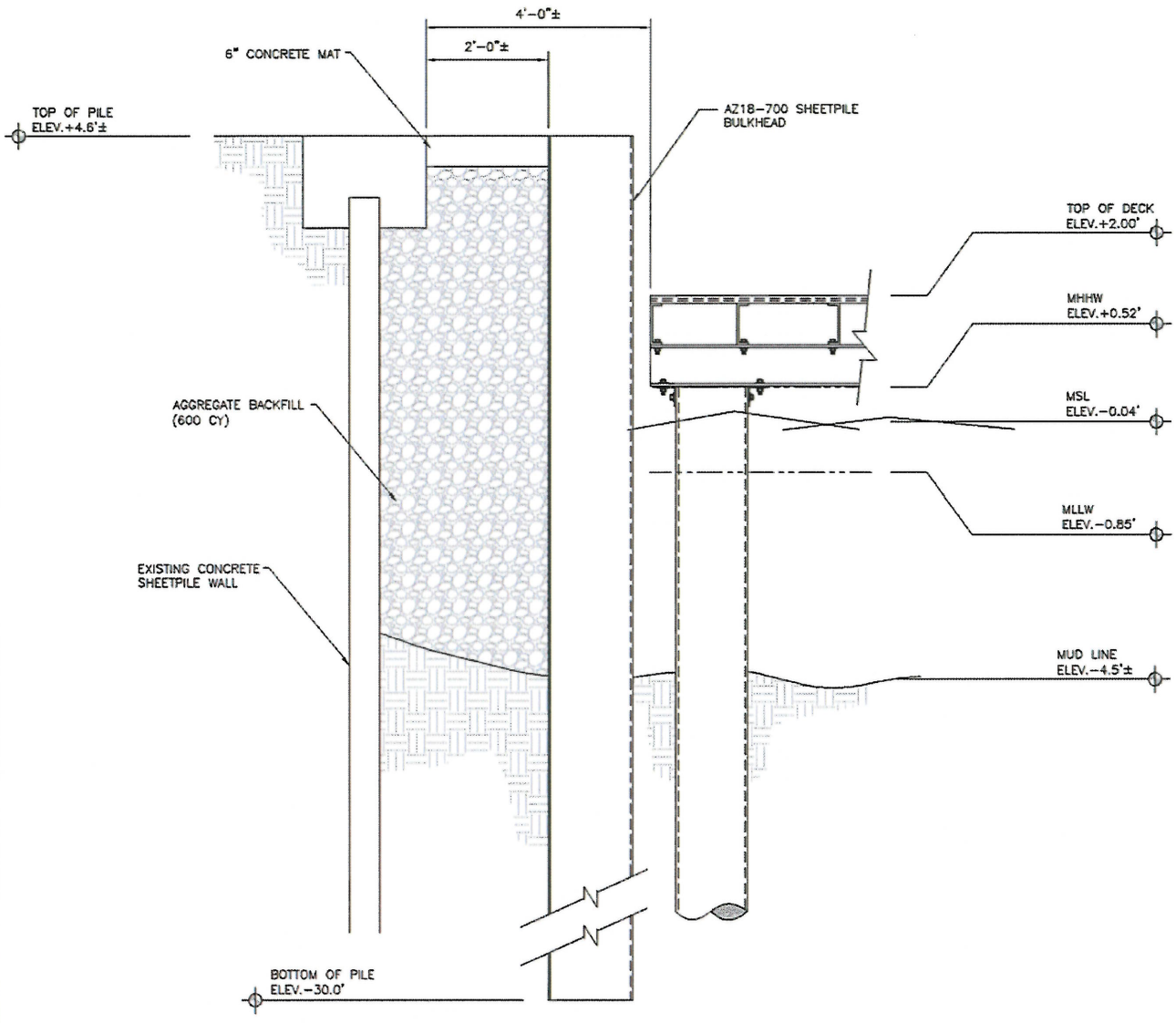

BULKHEAD SECTION A/10

SCALE: 3/8" = 1'-0"

FOR COE USE ONLY
Permit Application No.:
Applicant Name:
Sheet ____ of ____

HDR
Texas P.E. Firm Registration No. F-754

ACTIVITY: SKIPJACK PROPERTIES, LLC – MARINA RENOVATION	
APPLICANT: SKIPJACK PROPERTIES, LLC	DATUM: MLT
DATE: 08/2017	REV. DATE:
HDR JOB NO: 10042749	SHEET 21 OF 31

SEP 0 1 2017

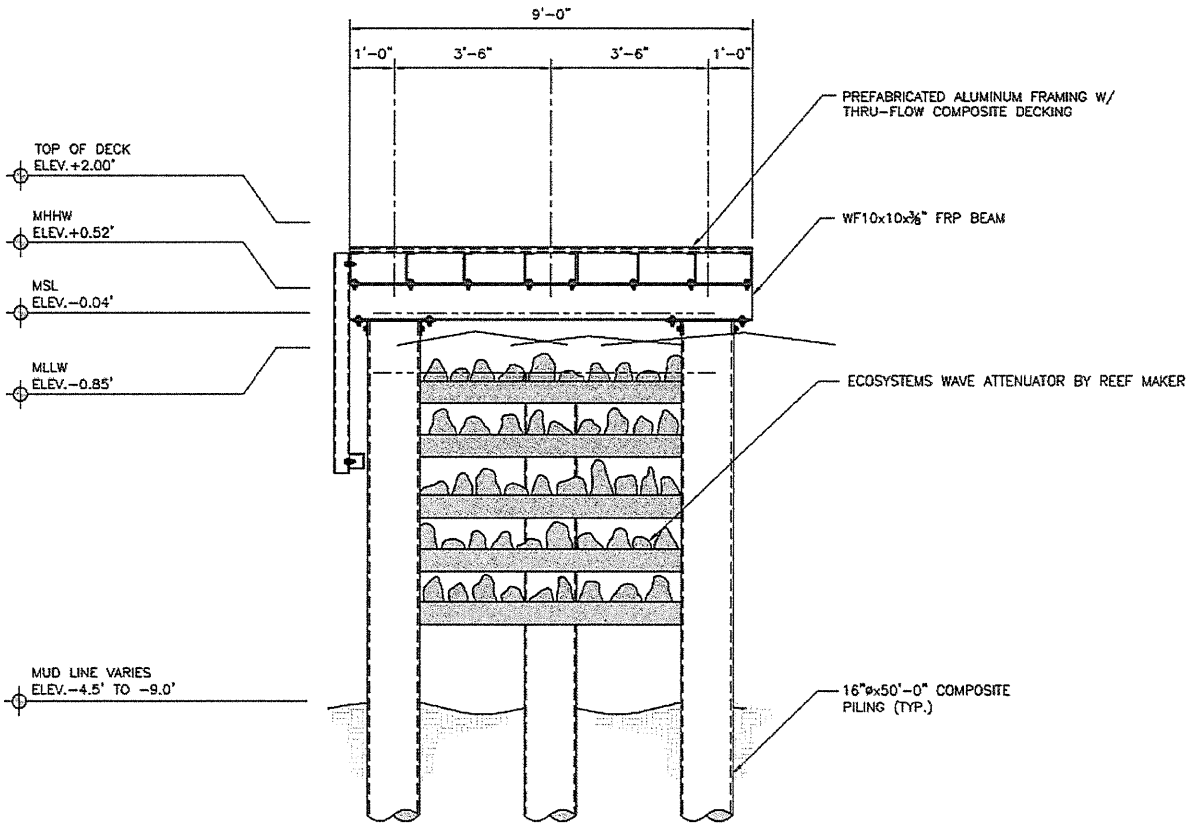

MAIN PIER (C) SECTION A/14

SCALE: 1/4" = 1'-0"

FOR COE USE ONLY
Permit Application No.:
Applicant Name:
Sheet ____ of ____

HDR
Texas P.E. Firm Registration No. F-754

ACTIVITY: SKIPJACK PROPERTIES, LLC – MARINA RENOVATION	
APPLICANT: SKIPJACK PROPERTIES, LLC	DATUM: MLT
DATE: 08/2017	REV. DATE:
HDR JOB NO: 10042749	SHEET 22 OF 31

SEP 0 1 2017

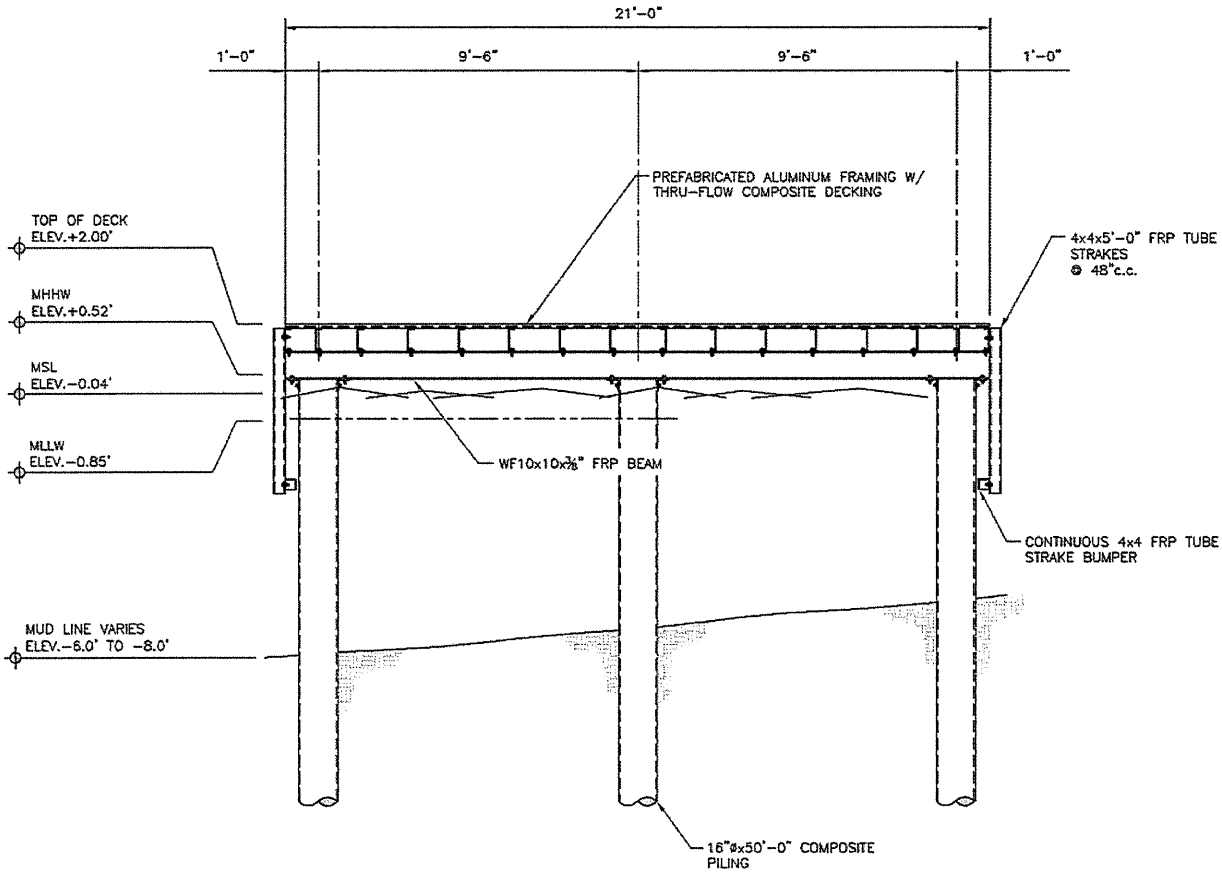

CHILDREN'S FISHING PIER SECTION A/14

SCALE: 3/16" = 1'-0"

FOR COE USE ONLY
Permit Application No.:
Applicant Name:
Sheet ____ of ____

HDR Texas P.E. Firm Registration No. F-754

ACTIVITY: SKIPJACK PROPERTIES, LLC – MARINA RENOVATION

APPLICANT: SKIPJACK PROPERTIES, LLC DATUM: MLT

DATE: 08/2017 REV. DATE:

HDR JOB NO: 10042749 SHEET 23 OF 31

SEP 0 1 2017

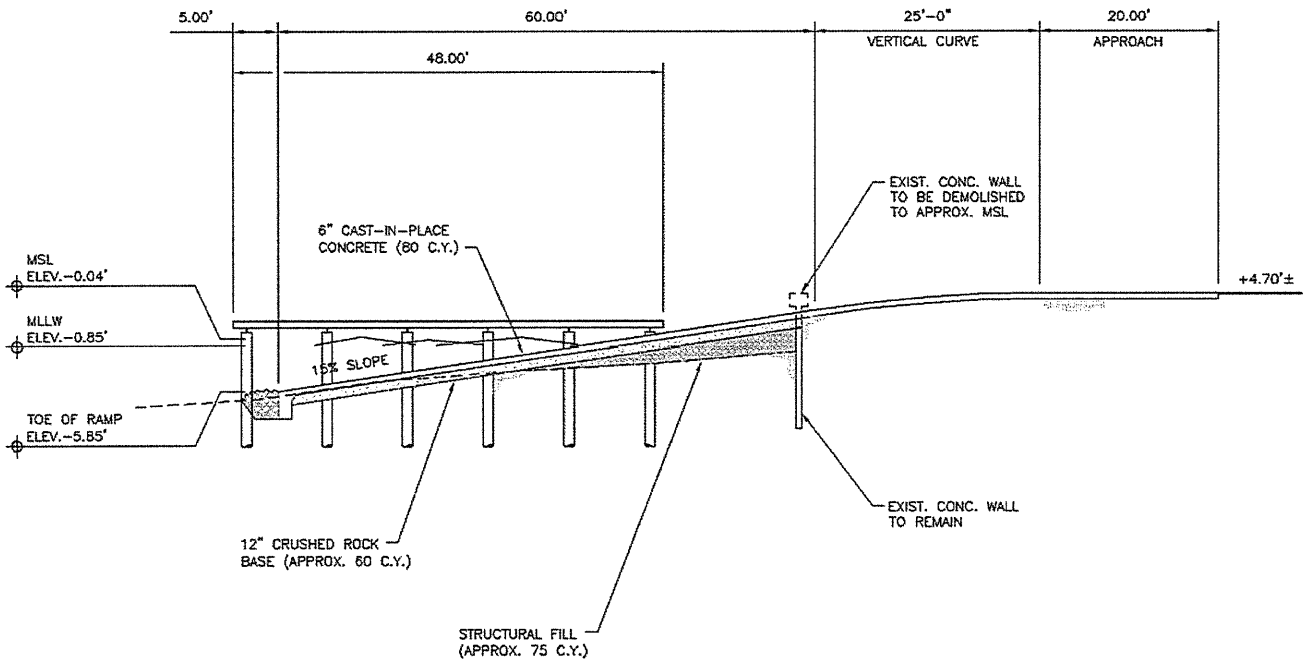

BOAT RAMP SECTION A/10

SCALE: 1" = 20'

FOR COE USE ONLY
Permit Application No.:
Applicant Name:
Sheet ____ of ____

HDR Texas P.E. Firm Registration No. F-754

ACTIVITY: SKIPJACK PROPERTIES, LLC – MARINA RENOVATION	
APPLICANT: SKIPJACK PROPERTIES, LLC	DATUM: MLT
DATE: 08/2017	REV. DATE:
HDR JOB NO: 10042749	SHEET 24 OF 31

SEP 0 1 2017

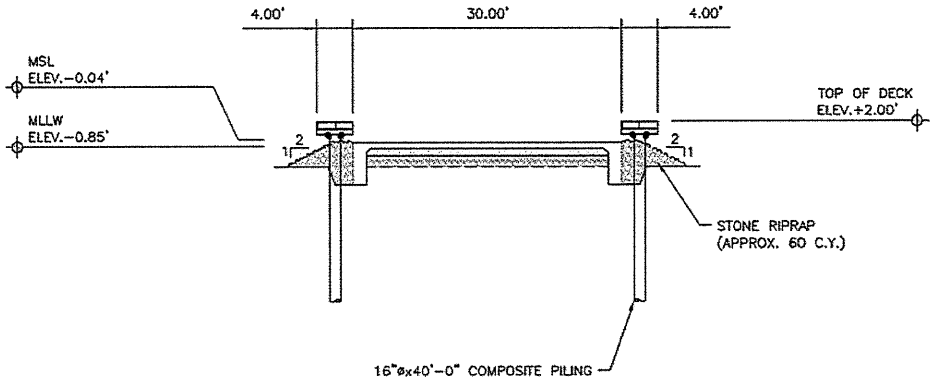

BOAT RAMP SECTION AT MSL (A / 10)

SCALE: 1" = 20'

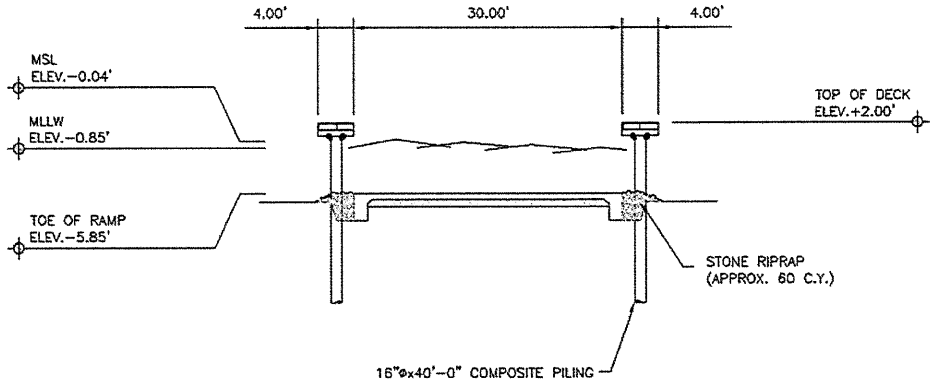

BOAT RAMP SECTION AT TOE OF RAMP (B / 10)

SCALE: 1" = 20'

FOR COE USE ONLY
Permit Application No.:
Applicant Name:
Sheet ____ of ____

HDR
Texas P.E. Firm Registration No. F-754

ACTIVITY: SKIPJACK PROPERTIES, LLC – MARINA RENOVATION	
APPLICANT: SKIPJACK PROPERTIES, LLC	DATUM: MLT
DATE: 08/2017	REV. DATE:
HDR JOB NO: 10042749	SHEET 25 OF 31

SEP 0 1 2017

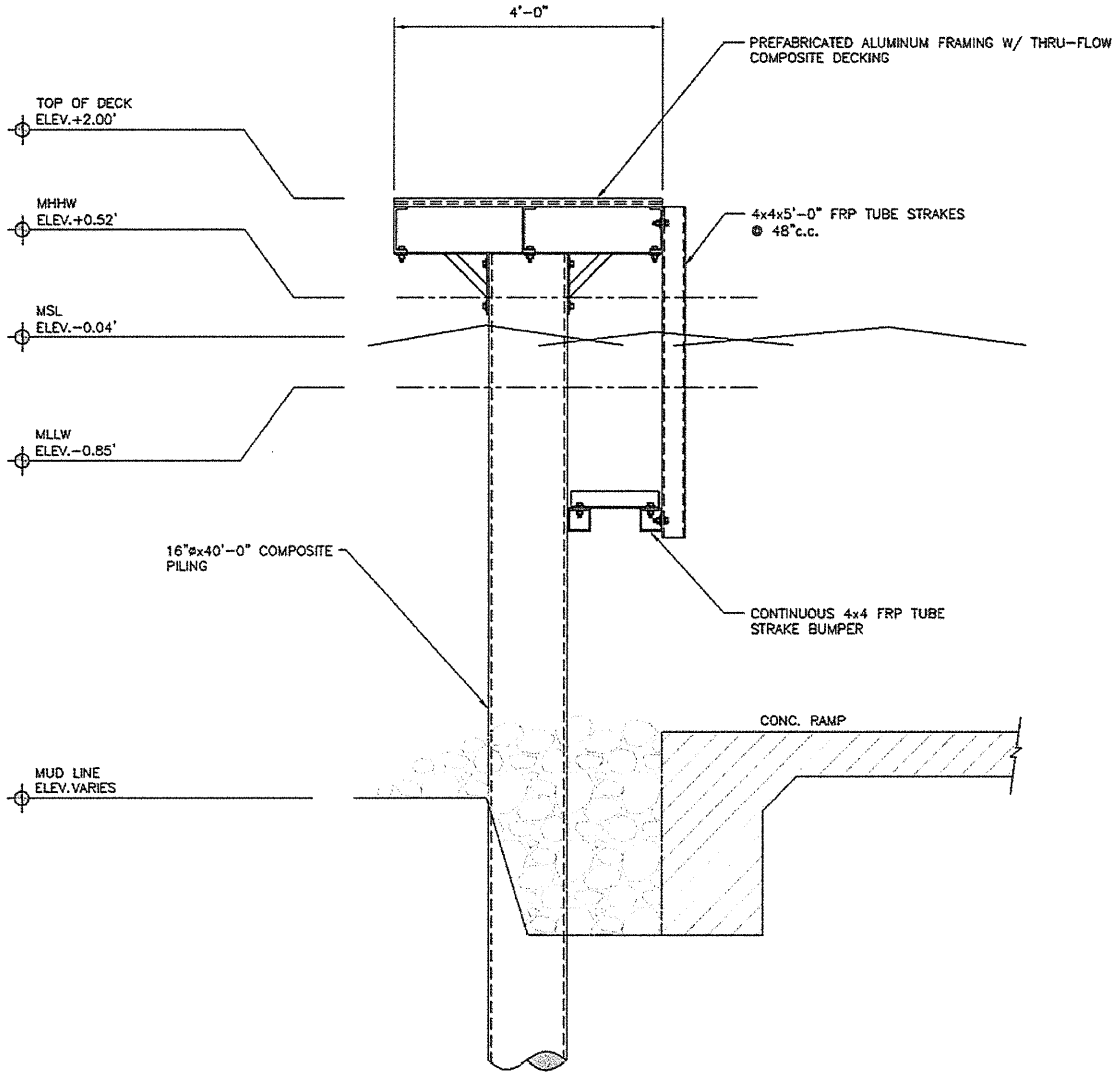

PIER AT BOAT RAMP SECTION (A / 10)

SCALE: 3/8" = 1'-0"

FOR COE USE ONLY
Permit Application No.:
Applicant Name:
Sheet ____ of ____

HDR
Texas P.E. Firm Registration No. F-754

ACTIVITY: SKIPJACK PROPERTIES, LLC – MARINA RENOVATION	
APPLICANT: SKIPJACK PROPERTIES, LLC	DATUM: MLT
DATE: 08/2017	REV. DATE:
HDR JOB NO: 10042749	SHEET 26 OF 31

SEP 01 2017

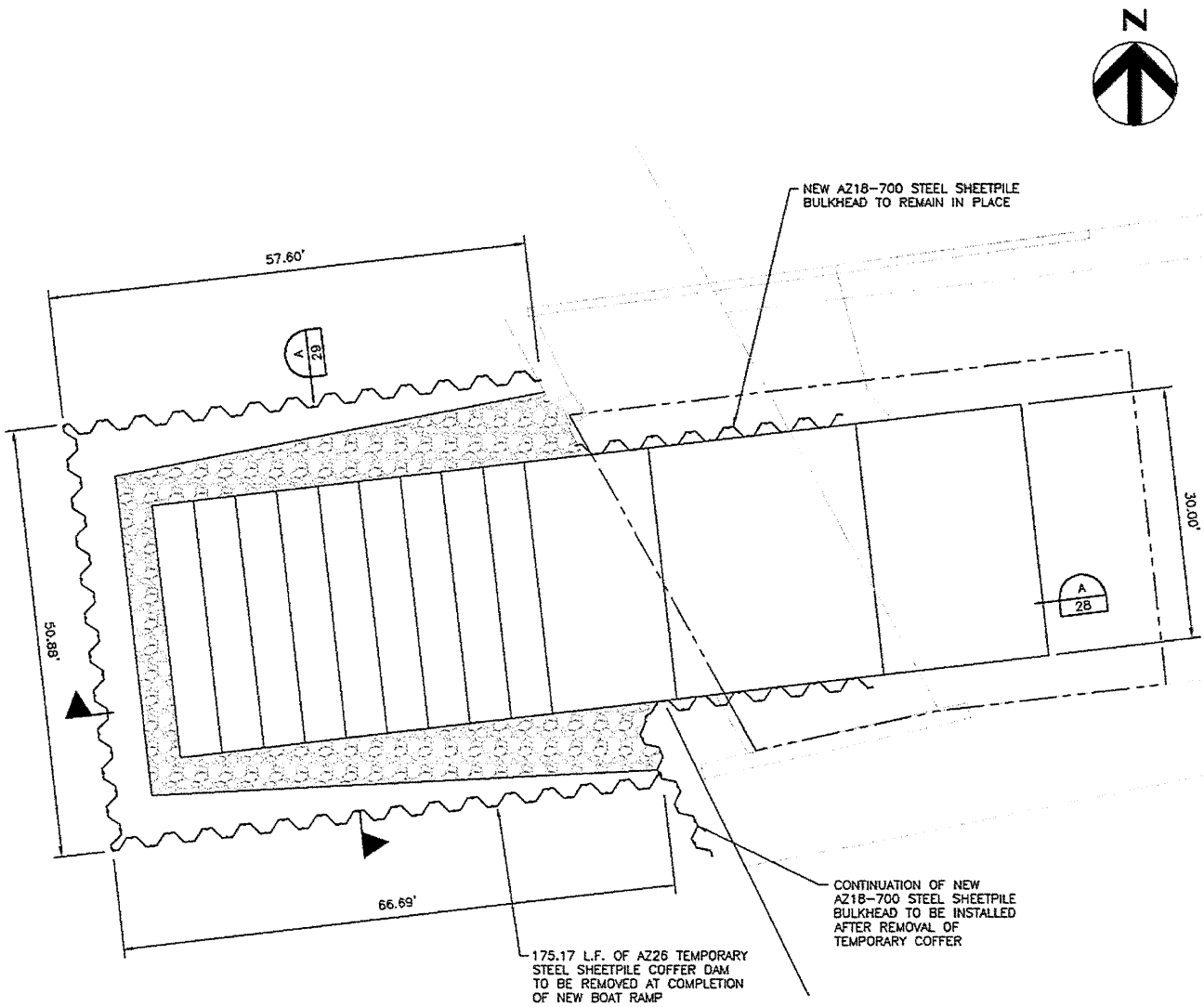

COFFER DAM PLAN (1/10)

SCALE: 1" = 20'

FOR COE USE ONLY
Permit Application No.:
Applicant Name:
Sheet ____ of ____

HDR
Texas P.E. Firm Registration No. F-754

ACTIVITY: SKIPJACK PROPERTIES, LLC – MARINA RENOVATION	
APPLICANT: SKIPJACK PROPERTIES, LLC	DATUM:
DATE: 08/2017	REV. DATE:
HDR JOB NO: 10042749	SHEET 27 OF 31

SEP 0 1 2017

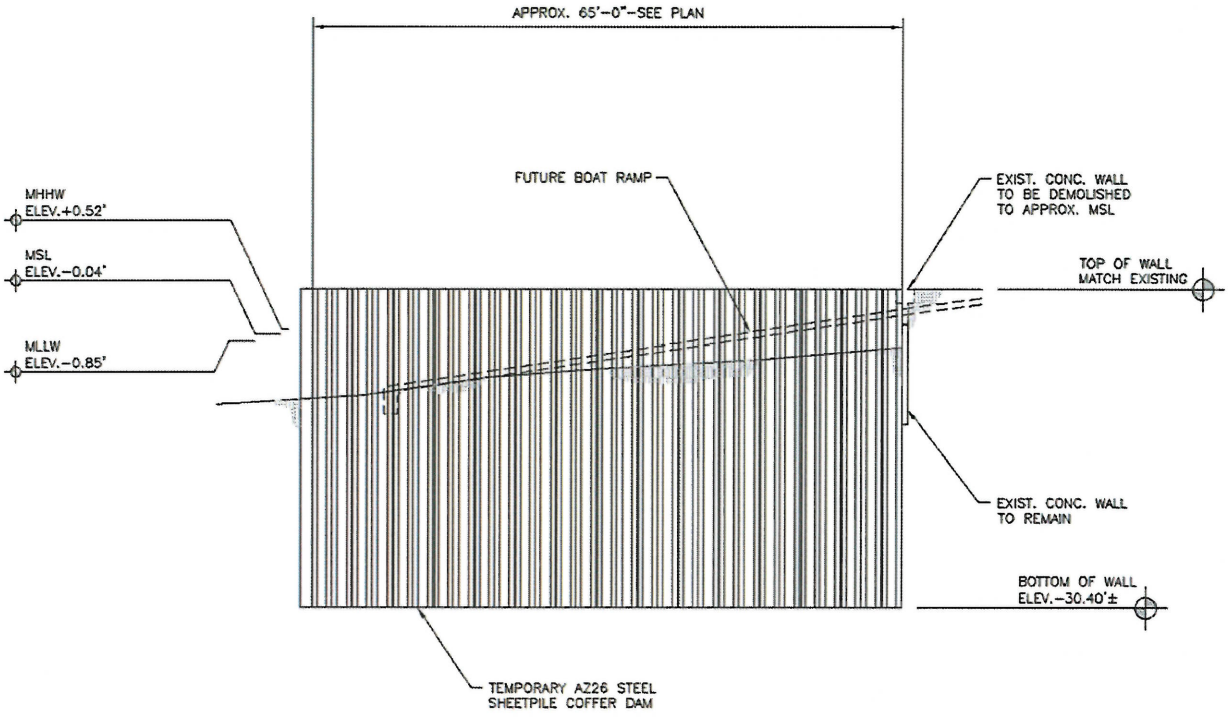

COFFER DAM SECTION A/27

SCALE: 1" = 20'

FOR COE USE ONLY
Permit Application No.:
Applicant Name:
Sheet ____ of ____

HDR
Texas P.E. Firm
Registration No. F-754

ACTIVITY: SKIPJACK PROPERTIES, LLC – MARINA RENOVATION	
APPLICANT: SKIPJACK PROPERTIES, LLC	DATUM: MLT
DATE: 08/2017	REV. DATE:
HDR JOB NO: 10042749	SHEET 28 OF 31

SEP 0 1 2017

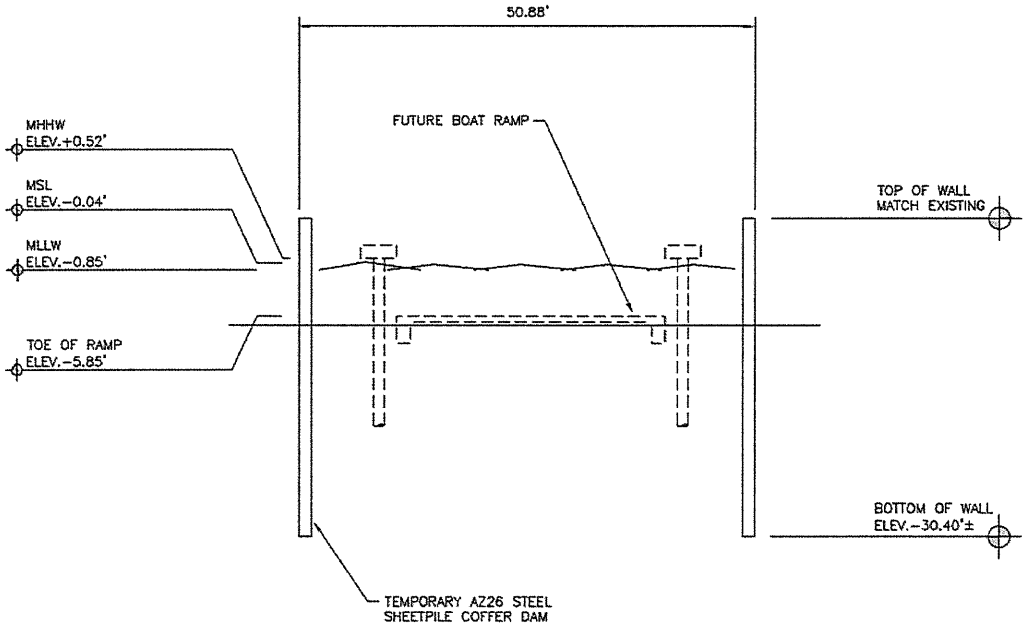

COFFER DAM SECTION A/27

SCALE: 1" = 20'

FOR COE USE ONLY
Permit Application No.:
Applicant Name:
Sheet ____ of ____

HDR
Texas P.E. Firm Registration No. F-754

ACTIVITY: SKIPJACK PROPERTIES, LLC – MARINA RENOVATION	
APPLICANT: SKIPJACK PROPERTIES, LLC	DATUM: MLT
DATE: 08/2017	REV. DATE:
HDR JOB NO: 10042749	SHEET 29 OF 31

N

DMPA VICINITY MAP (1/1)

SCALE: 1" = 4000'

THIS DRAWING IS FOR REGULATORY PURPOSES ONLY AND IS NOT TO BE USED FOR BIDDING OR CONSTRUCTION

FOR COE USE ONLY
Permit Application No.:
Applicant Name:
Sheet ____ of ____

HDR
Texas P.E. Firm Registration No. F-754

ACTIVITY: SKIPJACK PROPERTIES, LLC – MARINA RENOVATION	
APPLICANT: SKIPJACK PROPERTIES, LLC	DATUM:
DATE: 08/2017	REV. DATE: 11/10/17
HDR JOB NO: 10042749	SHEET 30 OF 31

30 of 31; SWG-1992-01693

NOV 13 2017

DMPA SITE PLAN (1/30)

SCALE: 1" = 400'

THIS DRAWING IS FOR REGULATORY PURPOSES ONLY AND IS NOT TO BE USED FOR BIDDING OR CONSTRUCTION

FOR COE USE ONLY
Permit Application No.:
Applicant Name:
Sheet ____ of ____

HDR
Texas P.E. Firm Registration No. F-754

ACTIVITY: SKIPJACK PROPERTIES, LLC – MARINA RENOVATION	
APPLICANT: SKIPJACK PROPERTIES, LLC	DATUM:
DATE: 08/2017	REV. DATE: 11/10/17
HDR JOB NO: 10042749	SHEET 31 OF 31

NOV 13 2017