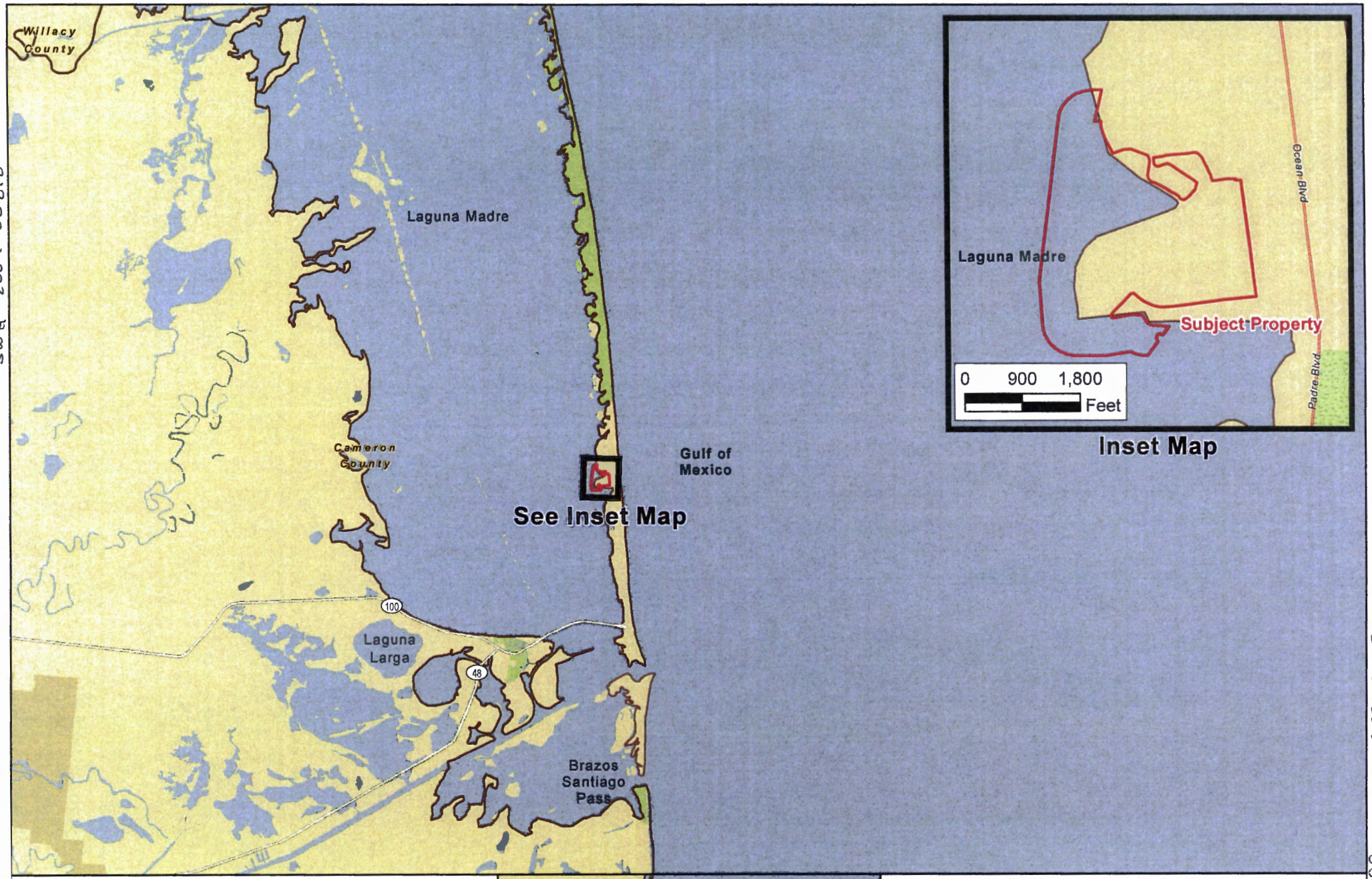

The Shores

EXHIBIT 1
VICINITY MAP

Cameron County, Texas

Created: 7/10/2019

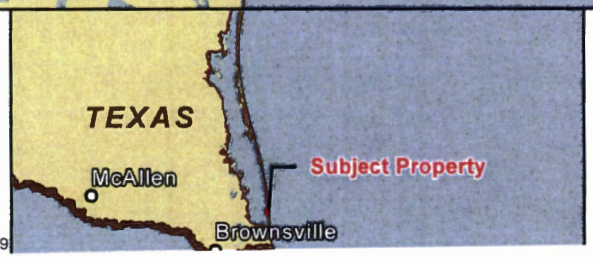

HOLLAWAY
ENVIRONMENTAL + COMMUNICATIONS

N

0 2.5 5
Miles

SWG-2007-00818

OCT 23 2019

PG 1 of 17

SWG-2007-00818

The Shores

EXHIBIT 2
PROPOSED SHORES RESIDENTIAL
PROJECT DESIGN

Cameron County, Texas

Created: 6/12/2019

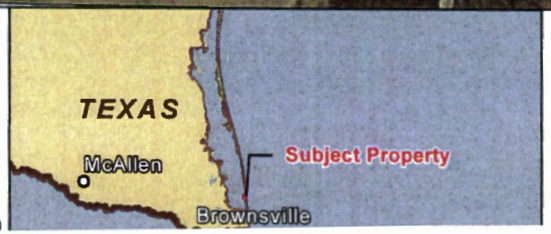

HOLLAWAY
ENVIRONMENTAL + COMMUNICATIONS

N

0 2.5 5 Miles

pg 2 of 17

SWG-2007-00818

OCT 23 2019

SWG-2007-00818

User: $$$HAEMPass

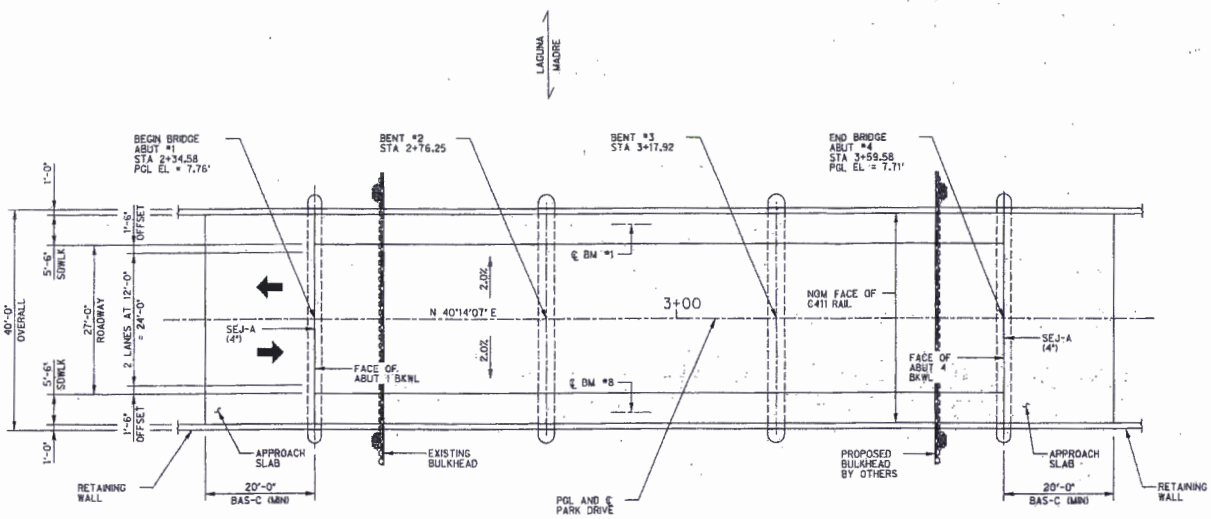

PLAN

SCALE: 1" = 10'

ALL ABUTMENTS AND BENTS ARE ON BEARING S 49°45'53" E

SCALE IN FEET (0 5 10 15 20)

DESIGN NOTES:

1. BRIDGE DESIGNED FOR HL93 LOADING PER AASHTO LRFD BRIDGE DESIGN SPECIFICATIONS (2004).
2. DESIGN SPEED = 30 MPH.
3. FUNCTIONAL CLASSIFICATION = RESIDENTIAL.
4. SIDEWALK IS A STRUCTURAL COMPONENT OF THIS BRIDGE AND SHALL NOT BE MODIFIED WITHOUT THE WRITTEN CONSENT OF THE ENGINEER.

FOUNDATION NOTES:

1. PILES MAY NOT BE CUT OFF UNTIL THE PILE TIP IS BELOW THE MINIMUM PENETRATION ELEVATION INDICATED AND HAS BEEN SHOWN TO HAVE ADEQUATE CAPACITY FOR THE CALCULATED FOUNDATION LOADS SHOWN.
2. SULFATE RESISTANT CLASS H CONCRETE SHALL BE USED FOR ALL PILES.
3. REFER TO PRESTRESSED CONCRETE PILING STANDARD CP FOR ADDITIONAL DETAILS.
4. FOUNDATION DESIGNED IN ACCORDANCE WITH RECOMMENDATIONS FROM DRASH CONSULTING ENGINEERS.

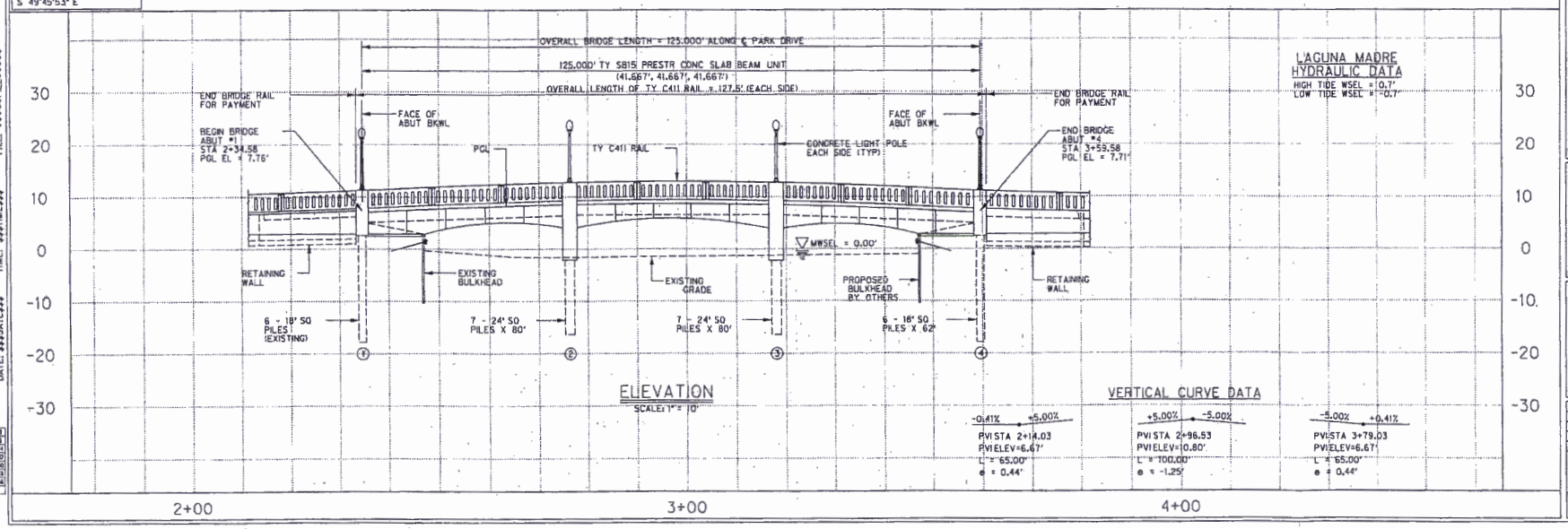

ELEVATION

SCALE: 1" = 10'

LAGUNA MADRE HYDRAULIC DATA

HIGH TIDE WSEL = 0.7'
LOW TIDE WSEL = -0.7'

VERTICAL CURVE DATA

-0.41% / +5.00%	+5.00% / -5.00%	-5.00% / +0.41%
PVI STA 2+14.03	PVI STA 2+96.53	PVI STA 3+79.03
PVI ELEV=6.67'	PVI ELEV=10.80'	PVI ELEV=6.67'
L = 65.00'	L = 100.00'	L = 65.00'
e = 0.44'	e = -1.25'	e = 0.44'

THE SHORES SUBDIVISION
MARINA VILLAGE PHASE
SECTION 2 BRIDGES
SOUTH PADRE ISLAND, TEXAS

THE SHORES OF SOUTH PADRE ISLAND

HALFF

No.	Date	Revision Description

05-06-09
STATE OF TEXAS
ERIC S. CHRISTIANSEN
85412
REGISTERED PROFESSIONAL ENGINEER

Project No.:	23851
Issued:	5 / 8 / 09
Drawn By:	SVM
Checked By:	ESC
Scale:	AS NOTED
Sheet Title	PARK DRIVE BRIDGE LAYOUT
Sheet Number	

Project:$$$PROJECT$$$ DATE: $$$DATE$$$ TIME: $$$TIME$$$ FILE: $$$$$FILE$$$$$

LEVELS DISPLAYED

PG 3 of 17

MAR 05 2019

SWG-2007-00818

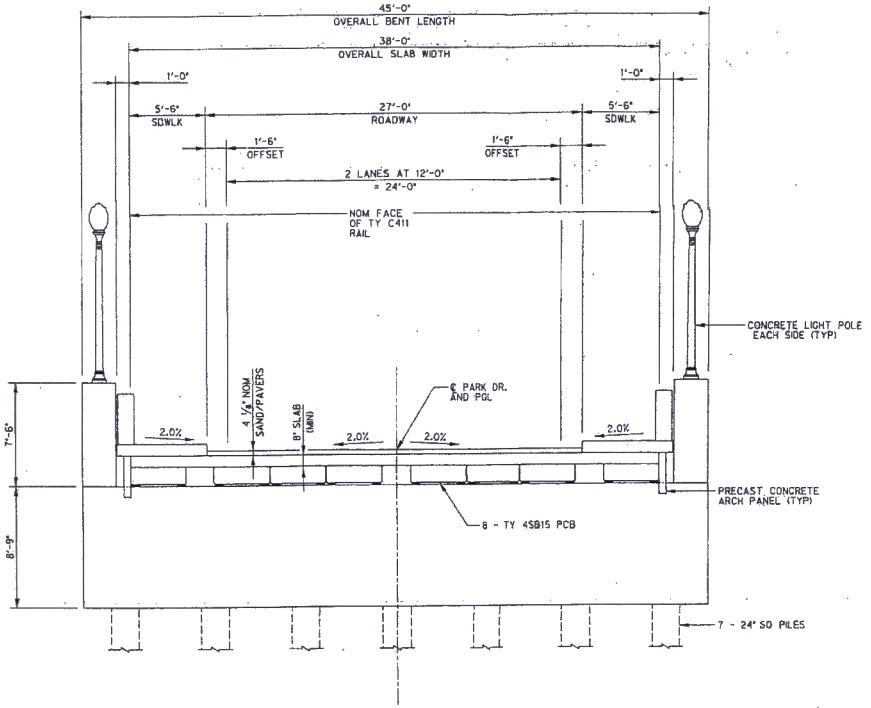

TYPICAL SECTION

SCALE: 1/4" = 1'

THE SHORES SUBDIVISION
MARINA VILLAGE PHASE
SECTION 2 BRIDGES
SOUTH PADRE ISLAND, TEXAS

THE SHORES OF SOUTH PADRE ISLAND

HALFF
5000 WESTLAKE PARK, SUITE 150
HOUSTON, TEXAS 77079
TEL: (281) 496-8000
FAX: (281) 496-8001
TBPE FIRM REGISTRATION # 312

Revision		
No.	Date	Description

STATE OF TEXAS
ERIC S. CHRISTIANSEN
85472
LICENSED PROFESSIONAL ENGINEER
05-08-09

Project No.:	22801
Issued:	5/8/09
Drawn By:	SWL
Checked By:	ESC
Scale:	AS NOTED

Sheet Title

PARK DRIVE
TYPICAL SECTION

Sheet Number

User: $$$HAEMP$$$
FILE: $$$$$FILE$$$$$
TIME: $$$TIME$$$
Project:$$PROJECT$$
DATE: $$$DATE$$$

LS DISPLAYED

	3	4	5	6	7	8
17	32	33	34	35	36	
18	30	31	32	33	34	
27	28	29	30	31	32	
39	38	37	36	35	40	
43	44	45	46	47	48	
51	52	53	54	55	56	
59	60	61	62	63		

Page 4 of 17

SWG-2007-00818

USER: $$$HALFP$$$

Project:$$PROJECT$$ FILE: $$$$$FILE$$$$$$
DATE: $$$DATE$$$ TIME: $$$TIME$$$

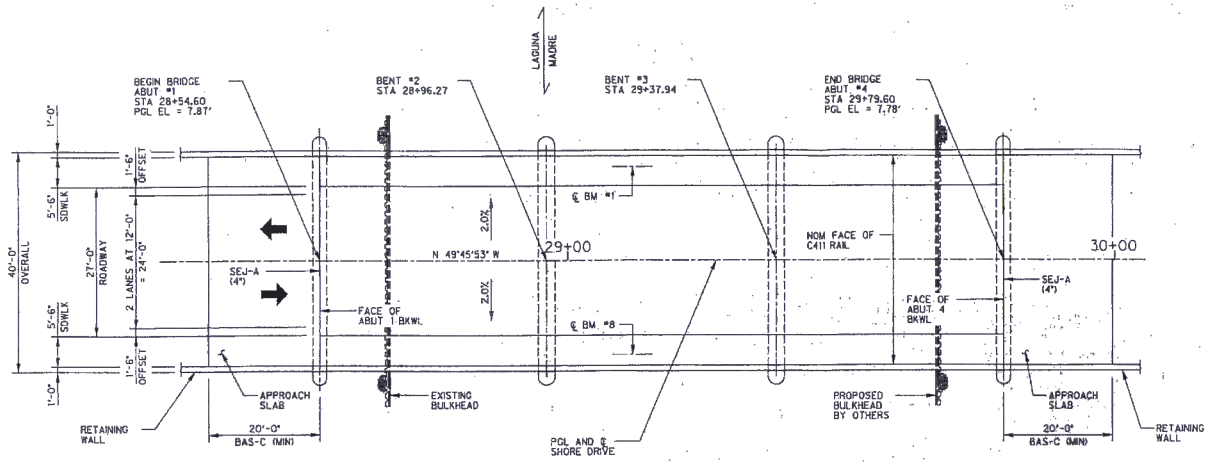

PLAN

SCALE: 1" = 10'

SCALE IN FEET

0 5 10 15 20

DESIGN NOTES:

1. BRIDGE DESIGNED FOR HL93 LOADING PER AASHTO LRFD BRIDGE DESIGN SPECIFICATIONS (2004).
2. DESIGN SPEED = 30 MPH.
3. FUNCTIONAL CLASSIFICATION = RESIDENTIAL.
4. SIDEWALK IS A STRUCTURAL COMPONENT OF THIS BRIDGE AND SHALL NOT BE MODIFIED WITHOUT THE WRITTEN CONSENT OF THE ENGINEER.

FOUNDATION NOTES:

1. PILES MAY NOT BE CUT OFF UNTIL THE PILE TIP IS BELOW THE MINIMUM PENETRATION ELEVATION INDICATED AND HAS BEEN SHOWN TO HAVE ADEQUATE CAPACITY FOR THE CALCULATED FOUNDATION LOADS SHOWN.
2. SULFATE RESISTANT CLASS H CONCRETE SHALL BE USED FOR ALL PILES.
3. REFER TO PRESTRESSED CONCRETE PILING STANDARD CP FOR ADDITIONAL DETAILS.
4. FOUNDATION DESIGNED IN ACCORDANCE WITH RECOMMENDATIONS FROM DRASH CONSULTING ENGINEERS.

ALL ABUTMENTS AND BENTS ARE ON BEARING N 40°14'07" E

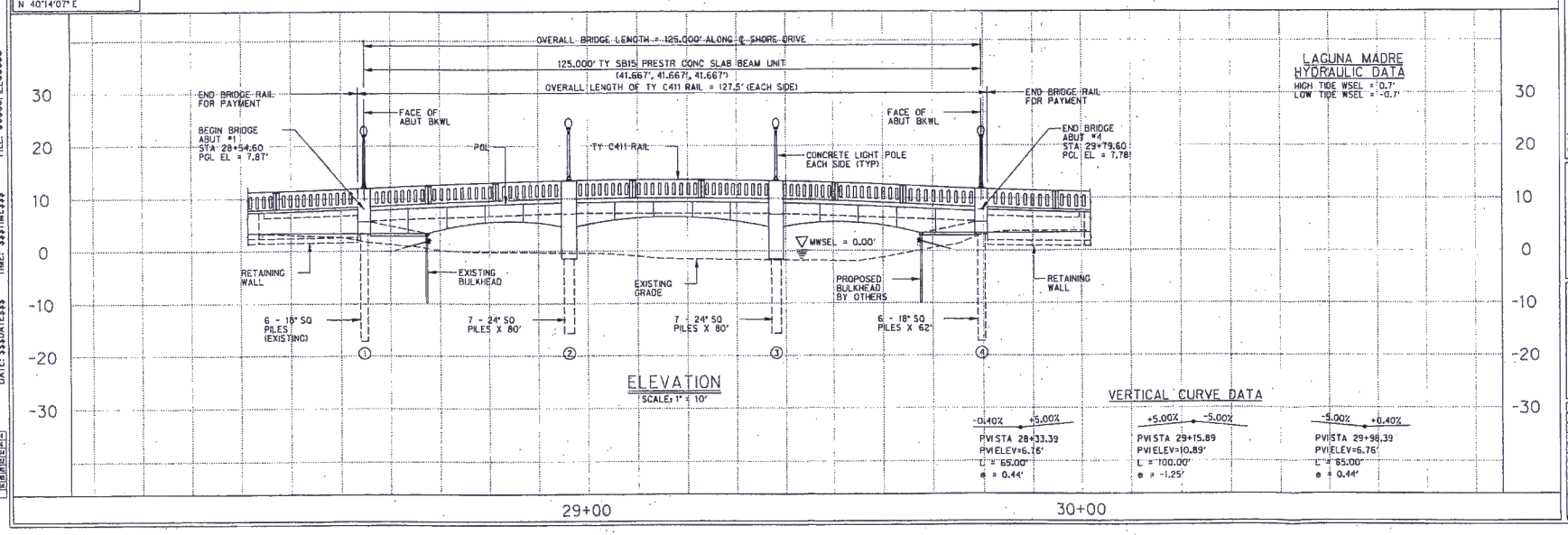

ELEVATION

SCALE: 1" = 10'

LAGUNA MADRE HYDRAULIC DATA

HIGH TIDE WSEL = 0.7'
LOW TIDE WSEL = -0.7'

VERTICAL CURVE DATA

-0.40% / +5.00%	+5.00% / -5.00%	-5.00% / +0.40%
PVI STA 28+33.39	PVI STA 29+15.89	PVI STA 29+98.39
PVI ELEV=6.76'	PVI ELEV=10.89'	PVI ELEV=6.76'
L = 65.00'	L = 100.00'	L = 65.00'
e = 0.44'	e = -1.25'	e = 0.44'

LEVELS DISPLAYED

1	2	3	4	5	6	7	8
9	10	11	12	13	14	15	16
17	18	19	20	21	22	23	24
25	26	27	28	29	30	31	32
33	34	35	36	37	38	39	40
41	42	43	44	45	46	47	48
49	50	51	52	53	54	55	56
57	58	59	60	61	62	63	64

THE SHORES SUBDIVISION
MARINA VILLAGE PHASE
SECTION 2 BRIDGES
SOUTH PADRE ISLAND, TEXAS

THE SHORES OF SOUTH PADRE ISLAND

HALFF
AUSTIN, TEXAS 78746
TBPE FIRM REGISTRATION # 312

Revision No.	Date	Description

05-08-09
ERIC S. CHRISTIANSEN
85412
LICENSED PROFESSIONAL ENGINEER

Project No.:	23081
Issued:	5 / 8 /09
Drawn By:	SWL
Checked By:	ESC
Scale:	AS NOTED
Sheet Title	SHORE DRIVE BRIDGE LAYOUT
Sheet Number	

Pg 5 of 17

SWG-2007-00818

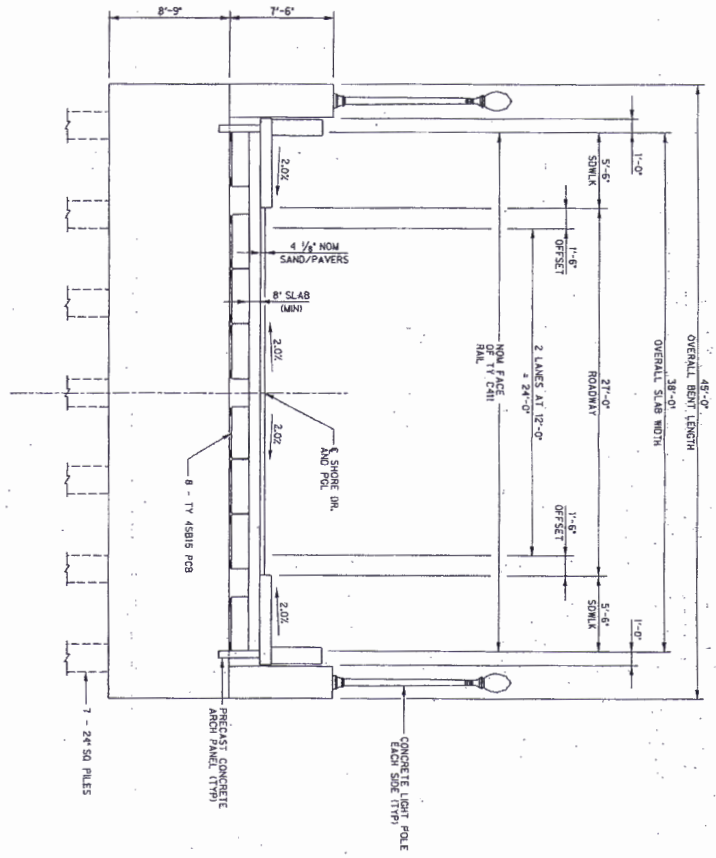

TYPICAL SECTION
SCALE: 1/4" = 1'

Revision		
No.	Date	Description

HALFF
8000 WEST MILITARY, SUITE 100
McALLEN, TEXAS 78503
TEL (956) 994-0284
FAX (956) 994-0282
TBPE Firm REGISTRATION # 312

THE SHORES
OF SOUTH PADRE ISLAND

THE SHORES SUBDIVISION
MARINA VILLAGE PHASE
SECTION 2 BRIDGES
SOUTH PADRE ISLAND, TEXAS

Project No.: 23881
Issued: 6 / 8 / 09
Drawn By: DAL
Checked By: BEC
Scale: AS NOTED
Sheet Title: SHORE DRIVE TYPICAL SECTION
Sheet Number

05-06-09

MAR 05 2019

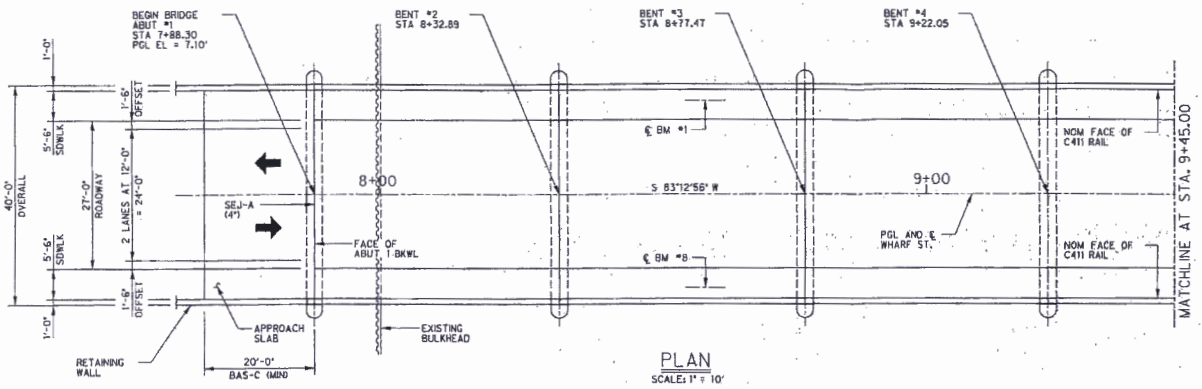

PLAN

SCALE: 1" = 10'

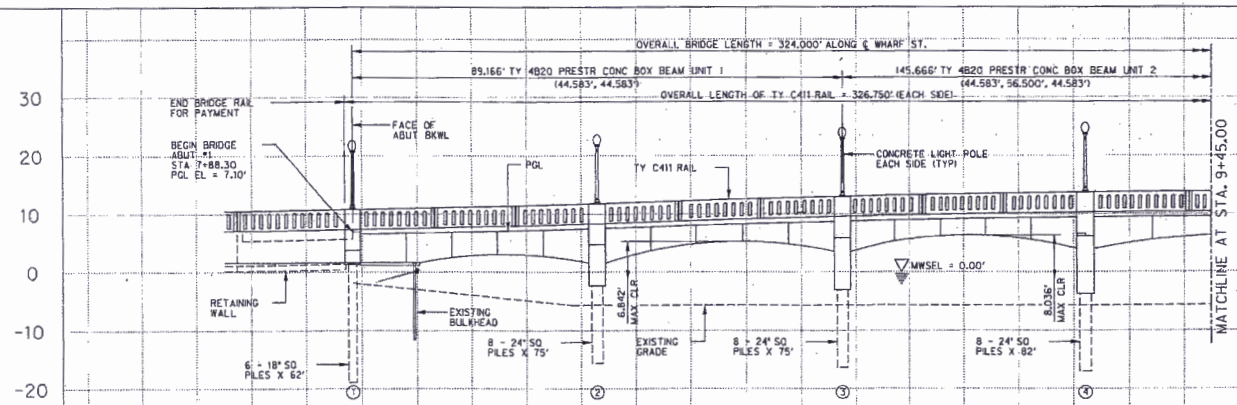

ELEVATION

SCALE: 1" = 30'

LAGUNA MADRE HYDRAULIC DATA

HIGH TIDE WSEL = 0.7'
LOW TIDE WSEL = -0.7'

VERTICAL CURVE DATA

+0.71% +3.33%	+3.33% -3.33%	-3.33% -0.70%
PVI STA 8+00.00	PVI STA 9+50.00	PVI STA 11+00.00
PVI ELEV=7.00'	PVI ELEV=12.00'	PVI ELEV=7.00'
L = 100.00'	L = 200.00'	L = 100.00'
e = 0.33'	e = -1.67'	e = 0.33'

SCALE IN FEET

0 5 10 15 20

N

DESIGN NOTES:

1. BRIDGE DESIGNED FOR HL93 LOADING PER AASHTO LRFD BRIDGE DESIGN SPECIFICATIONS (2004).
2. DESIGN SPEED = 30 MPH.
3. FUNCTIONAL CLASSIFICATION = RESIDENTIAL.
4. SIDEWALK IS A STRUCTURAL COMPONENT OF THIS BRIDGE AND SHALL NOT BE MODIFIED WITHOUT THE WRITTEN CONSENT OF THE ENGINEER.

FOUNDATION NOTES:

1. PILES MAY NOT BE CUT OFF UNTIL THE PILE TIP IS BELOW THE MINIMUM PENETRATION ELEVATION INDICATED AND HAS BEEN SHOWN TO HAVE ADEQUATE CAPACITY FOR THE CALCULATED FOUNDATION LOADS SHOWN.
2. SULFATE RESISTANT CLASS H CONCRETE SHALL BE USED FOR ALL PILES.
3. REFER TO PRESTRESSED CONCRETE PILING STANDARD CP FOR ADDITIONAL DETAILS.
4. FOUNDATION DESIGNED IN ACCORDANCE WITH RECOMMENDATIONS FROM DRASH CONSULTING ENGINEERS.

THE SHORES SUBDIVISION
MARINA VILLAGE PHASE
SECTION 2 BRIDGES
SOUTH PADRE ISLAND, TEXAS

THE SHORES OF SOUTH PADRE ISLAND

HALFF

Revision No.	Date	Description

05-08-09

ERIC S. CHRISTIANSEN 88412

Project No.:	29991
Issued:	5/8/09
Drawn By:	SWL
Checked By:	ESC
Scale:	AS NOTED
Sheet Title	WHARF STREET BRIDGE LAYOUT 1 of 2
Sheet Number	

1 to 7 of 17

SWG-2007-00818

User: $$$HAEMP$$$
FILE: $$$$$FILE$$$$$
TIME: $$$TIME$$$
Project$$PROJECT$$
DATE: $$$DATE$$$

LEVELS DISPLAYED

MAR 0 3 2013

SWG-2007-00818

PG 8 of 17

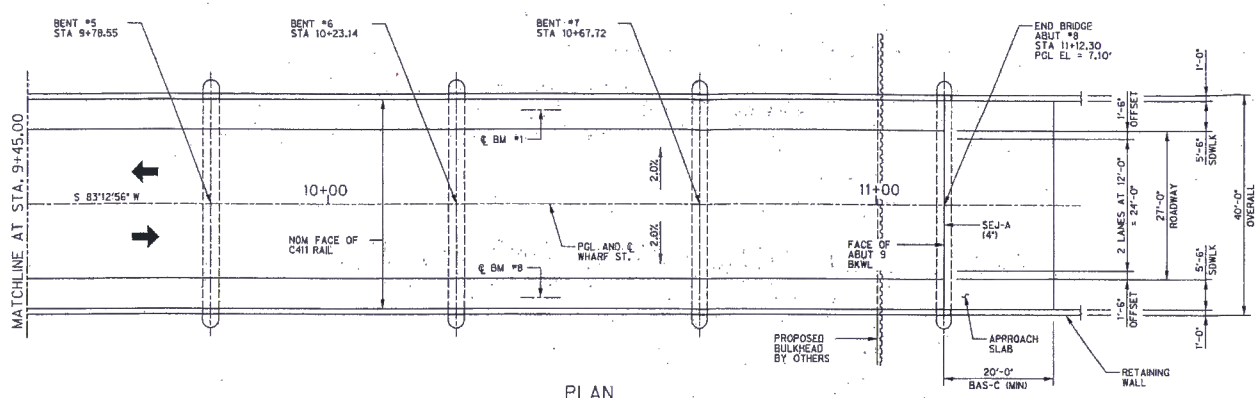

PLAN

SCALE: 1" = 10'

SCALE IN FEET

0 5 10 15 20

N

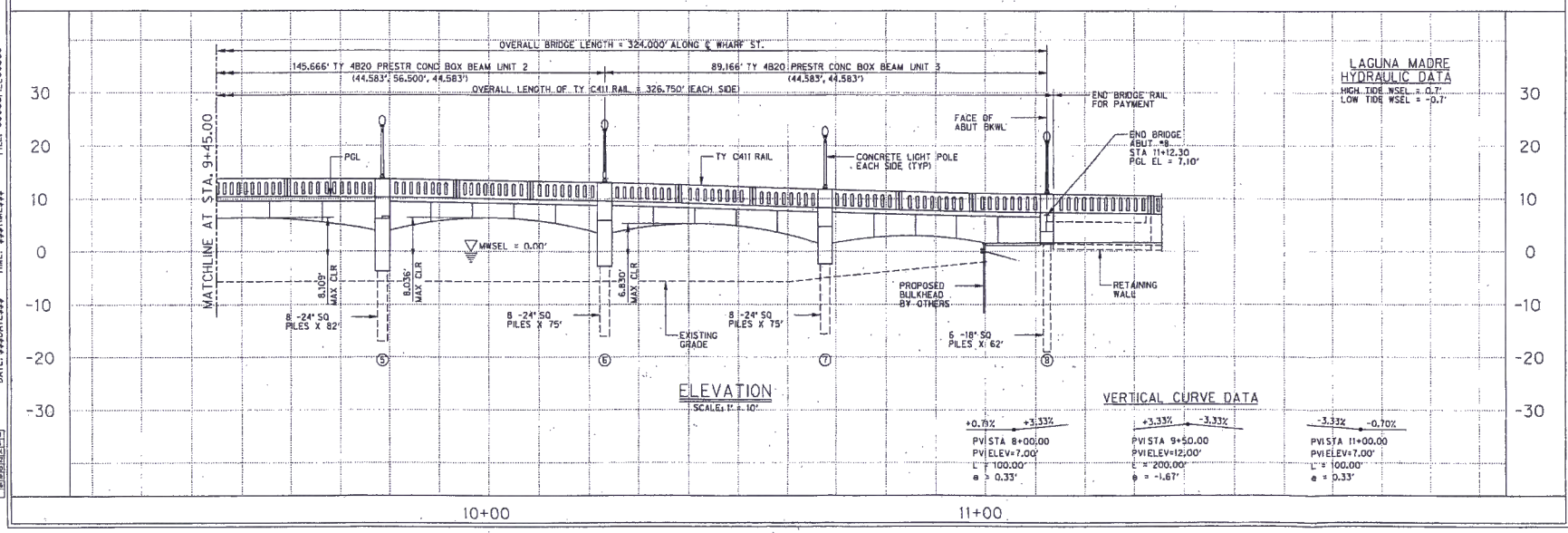

ELEVATION

SCALE: 1" = 10'

LAGUNA MADRE
HYDRAULIC DATA

HIGH TIDE WSEL = 0.7'
LOW TIDE WSEL = -0.7'

VERTICAL CURVE DATA

+0.70% +3.33%	+3.33% -3.33%	-3.33% -0.70%
PVI STA 8+00.00	PVI STA 9+50.00	PVI STA 11+00.00
PVI ELEV=7.00'	PVI ELEV=12.00'	PVI ELEV=7.00'
L = 100.00'	L = 200.00'	L = 100.00'
e = 0.33'	e = -1.67'	e = 0.33'

THE SHORES SUBDIVISION
MARINA VILLAGE PHASE
SECTION 2 BRIDGES
SOUTH PADRE ISLAND, TEXAS

THE SHORES OF SOUTH PADRE ISLAND

HALFF
800 WEST FELLOWSHIP, SUITE 108
TEL (956) 985-0288
FAX (956) 985-0289
TBPE FIRM REGISTRATION # 312

Revision No.	Date	Description

05-03-09

ERIC S. CHRISTIANSEN
65412
LICENSED
PROFESSIONAL ENGINEER

Project No.:	23661
Issued:	5/8/08
Drawn By:	SWL
Checked By:	ESC
Scale:	AS NOTED
Sheet Title	WHARF STREET BRIDGE LAYOUT

Sheet Number

User: $$$HAEMP$$$
FILE: $$$$$FILE$$$$$
TIME: $$$TIME$$$
Project:$$$PROJECT$$$
DATE: $$$DATE$$$

LEVELS DISPLAYED

SWG-2007-00818

Project:$$PROJECT$$
DATE: $$$DATE$$$ TIME: $$$TIME$$$ FILE: $$$$$FILE$$$$$ User: $$$HAEMP$$$

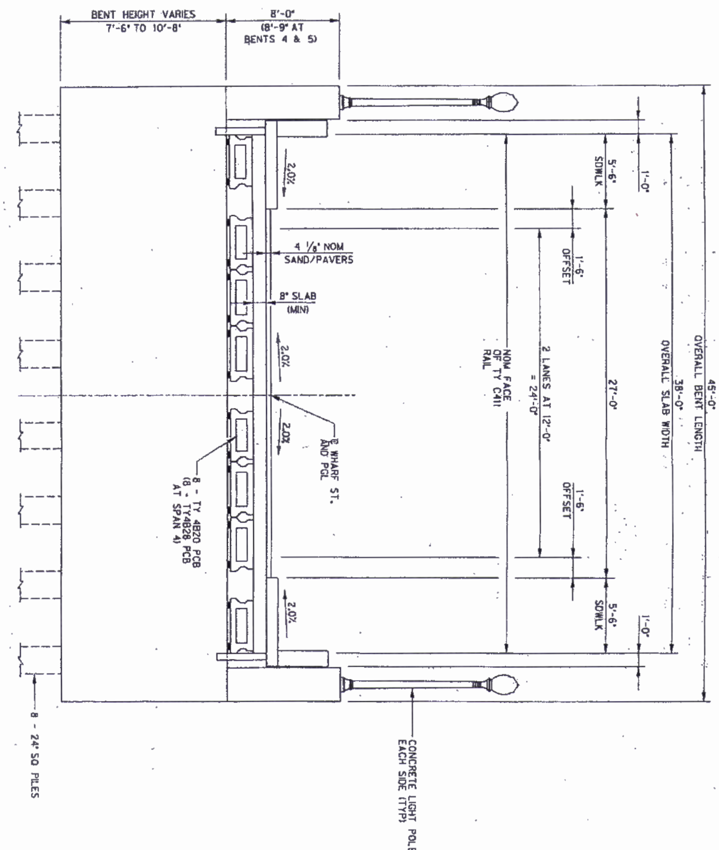

TYPICAL SECTION

SCALE: 1/4" = 1'

Project No.:	23651
Issued:	5 / 8 /09
Drawn By:	SWL
Checked By:	EBC
Scale:	AS NOTED
Sheet Title	WHARF STREET TYPICAL SECTION
Sheet Number	

Revision		
No.	Date	Description

HALFF
5000 WEST MILITARY, SUITE 100
McALLEN, TEXAS 78503
TBPE FIRM REGISTRATION # 312

THE SHORES OF SOUTH PADRE ISLAND

THE SHORES SUBDIVISION
MARINA VILLAGE PHASE
SECTION 2 BRIDGES
SOUTH PADRE ISLAND, TEXAS

MAR 05 2019

Pg 9 of 17

MAR 09 2015

SWG-2007-00818

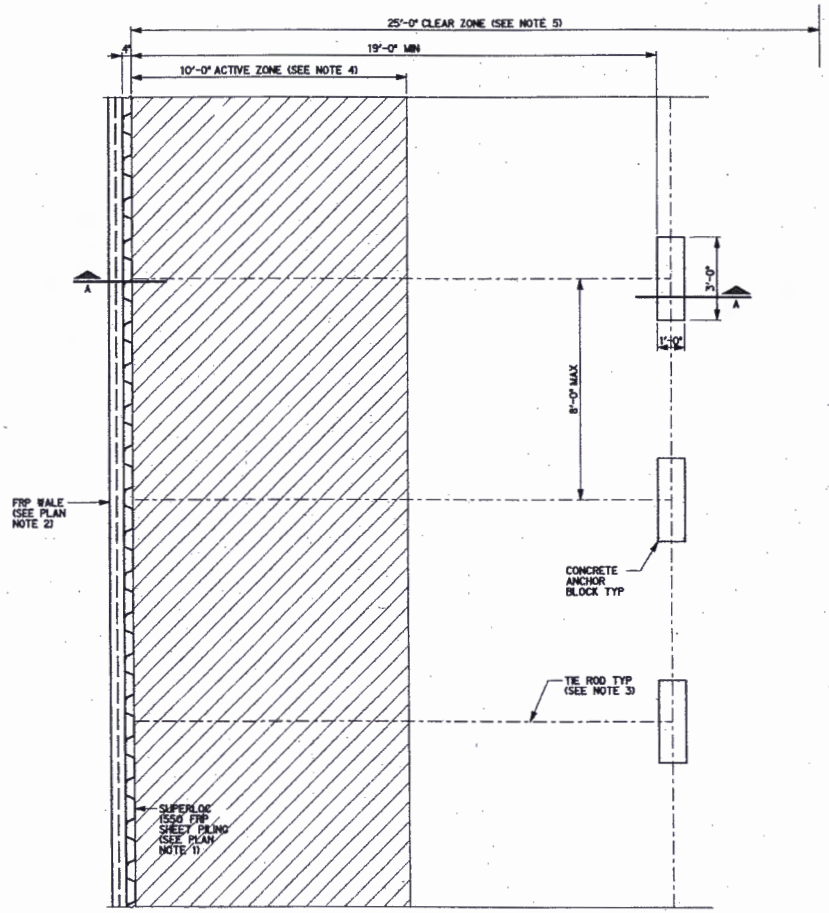

TYPICAL BULKHEAD PLAN
SCALE: 1/2"=1'-0"

PLAN NOTES

1. SHEET PILING PROVIDED SHALL MEET THE FOLLOWING MINIMUM PROPERTIES FOR SUPERLOC 1550 FRP SHEET PILE:
   - o NOMINAL WEB THICKNESS = 0.165 IN
   - o bx = 8.42 IN^4/FT
   - o Sx = 4.08 IN^3/FT
   - o E = 3000 KSI
   - o MAXIMUM APPLIED MOMENT = 1,504 FT-LB/FT
   - o MINIMUM SAFETY FACTOR
     - MOMENT = 2.5
     - SHEAR = 3.0
   - o MAXIMUM DEFLECTION = L/180
2. WALE PROVIDED SHALL MEET THE FOLLOWING MINIMUM PROPERTIES FOR SUPERWALE FRP WALE:
   - o bx = 49.22 IN^4
   - o Sx = 14.40 IN^3
   - o E = 3800 KSI
   - o MAXIMUM APPLIED LOAD = 800 LB/FT
   - o MINIMUM SAFETY FACTOR
     - MOMENT = 2.5
     - SHEAR = 3.0
   - o MAXIMUM DEFLECTION = 3/8"
3. TIE RODS, NUTS AND WASHERS SHALL BE DESIGNED FOR THE FOLLOWING CONDITIONS:
   - o MAXIMUM APPLIED TENSILE FORCE = 1,100 POUNDS PER FOOT OF ANCHOR SPACING
   - o MINIMUM SAFETY FACTOR = 2.0
   - o MAXIMUM ELONGATION = 1/2"
4. NO FUTURE CONSTUCTION OR PROPERTY IMPROVEMENTS SHALL BE ALLOWED WITHIN 10'-0" ACTIVE ZONE.
5. NO CONSTRUCTION EQUIPMENT SHALL BE ALLOWED WITHIN 25'-0" CLEAR ZONE.

THE SHORES SUBDIVISION
MARINA VILLAGE PHASE
SECTION 2
SOUTH PADRE ISLAND, TEXAS

9/1/06
STATE OF TEXAS
FRANK S. GRIFFIN, JR.
87724
LICENSED
PROFESSIONAL ENGINEER
Frank S. Griffin

Halff Associates, Inc.
ENGINEERS · ARCHITECTS · SCIENTISTS · PLANNERS · SURVEYORS
4600 WEST MILITARY, SUITE 100
MCALLEN, TEXAS 78503
TEL (956) 664-0266
FAX (956) 664-0222

Project No. AVC # 23851
Initial: 09-04-06

No.	Date	Description

Drawn by: SS
Checked by: FJG
Sheet Title
BULKHEAD PLAN
S-2
Sheet Number

#\23000s\23851\cadd\bulkhead\23851.s2.dgn 3:04:59 PM 9/1/2006 Steve Guerra Active Project=AEC Workspace

SWG-2007-00818

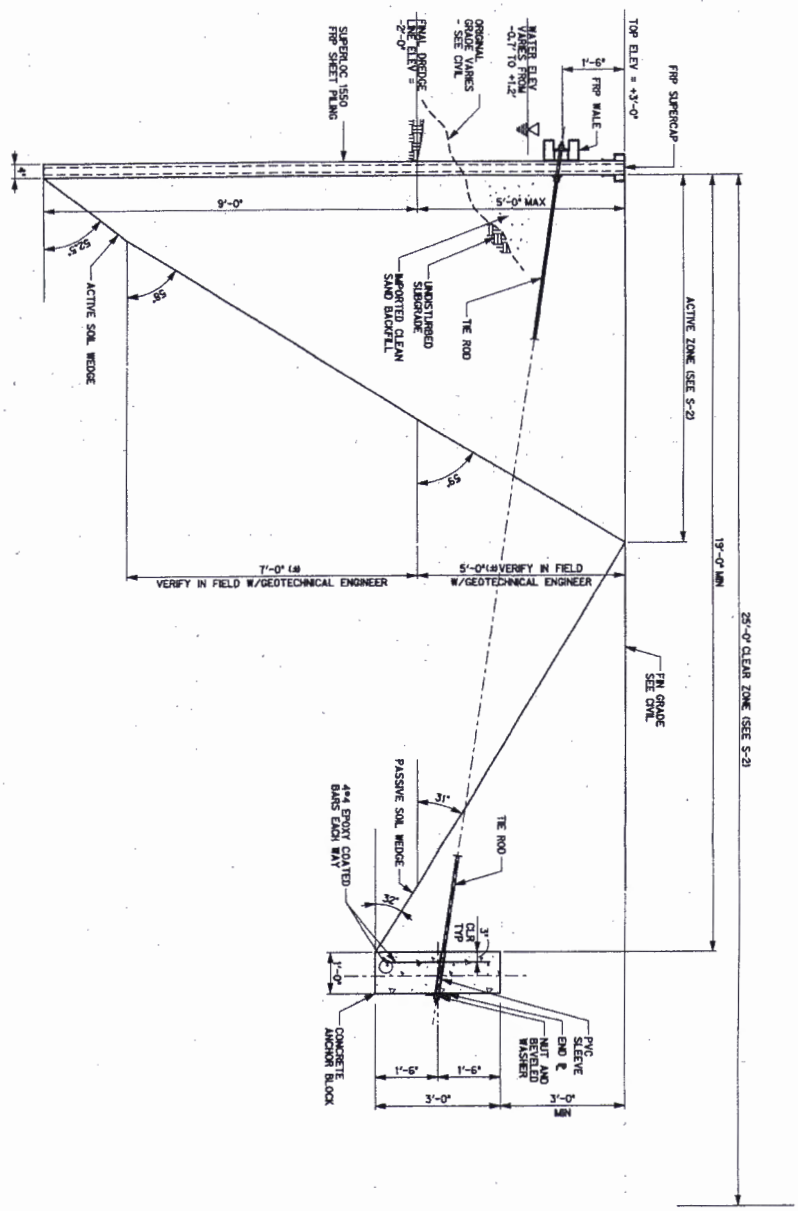

TYPICAL BULKHEAD SECTION A-A
SCALE: 3/4"=1'-0"

SECTION NOTES:
1. AT OWNER'S OPTION, HELICAL ANCHORS MAY BE PROVIDED IN LIEU OF CONCRETE ANCHOR BLOCKS SHOWN. SEE SHEET S-4 FOR ADDITIONAL INFORMATION.

Revisions		
No.	Date	Description

Drawn by: JJC
Checked by: JJC
Date: 08/01/06
Scale: 1/4"=1'-0"

Sheet Number S-3
BULKHEAD SECTION

Halff Associates, Inc.
ENGINEERS • ARCHITECTS • SCIENTISTS • PLANNERS • SURVEYORS
4600 WEST MILITARY, SUITE 700
McALLEN, TEXAS 78503
TEL (956) 664-0286
FAX (956) 664-0282

THE SHORES SUBDIVISION
MARINA VILLAGE PHASE
SECTION 2
SOUTH PADRE ISLAND, TEXAS

SW6-2007-00818

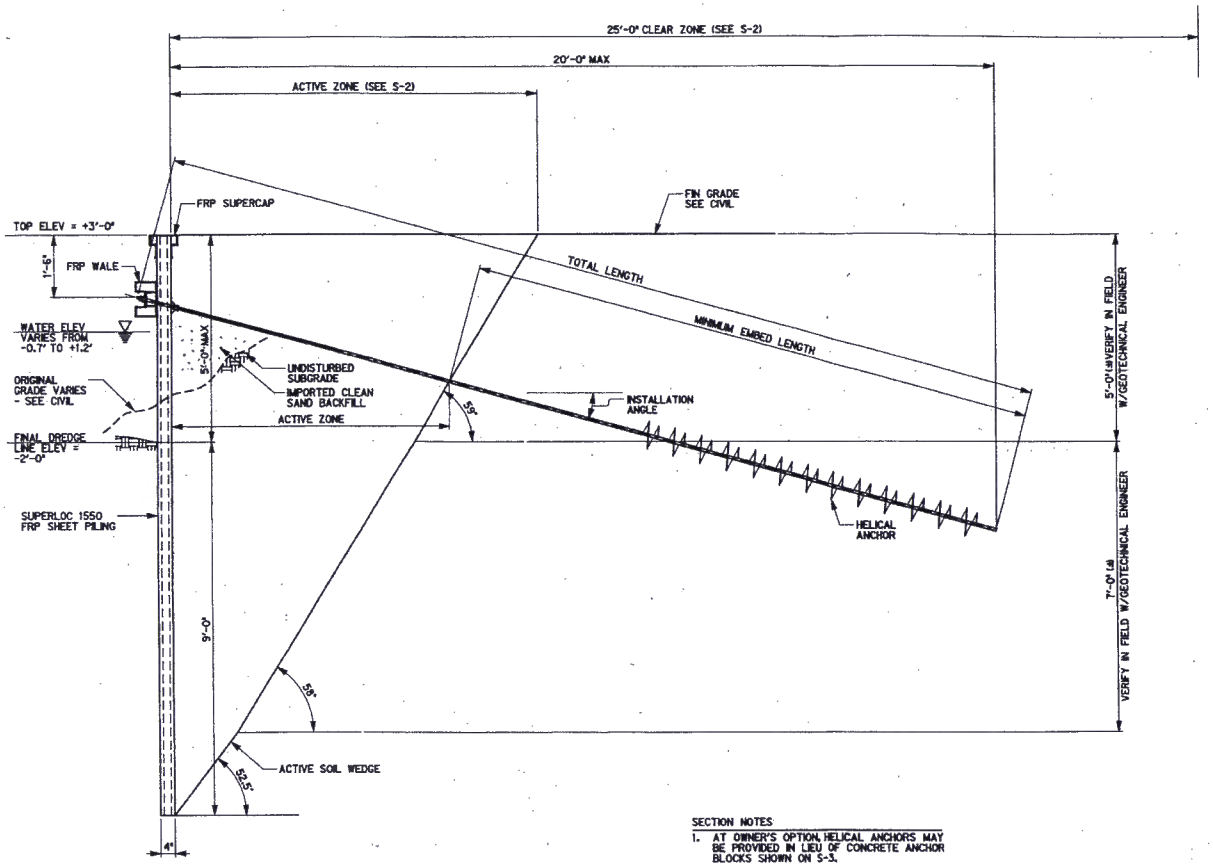

ALTERNATE BULKHEAD SECTION A-A

SCALE: 3/4"=1'-0"

SECTION NOTES

1. AT OWNER'S OPTION, HELICAL ANCHORS MAY BE PROVIDED IN LIEU OF CONCRETE ANCHOR BLOCKS SHOWN ON S-3.
2. HELICAL ANCHORS SHALL BE DESIGNED BY A PROFESSIONAL ENGINEER LICENSED IN THE STATE OF TEXAS.
3. HELICAL ANCHORS SHALL BE PULL-TESTED ON SITE TO ENSURE COMPLIANCE WITH DESIGN LOADING AND ACTUAL SOIL CONDITIONS.
4. MAXIMUM APPLIED TENSILE FORCE IN HELICAL ANCHOR IS 800 POUNDS PER FOOT OF ANCHOR SPACING.
5. MINIMUM FACTOR OF SAFETY FOR HELICAL ANCHORS SHALL BE 2.0.
6. HELICAL ANCHORS SHALL BE PROTECTED FROM CORROSION FROM EXPOSURE TO SEA WATER.

THE SHORES SUBDIVISION
MARINA VILLAGE PHASE
SECTION 2
SOUTH PADRE ISLAND, TEXAS

9/1/06

STATE OF TEXAS
FRANK S. GRIFFIN, JR.
87724
LICENSED
PROFESSIONAL ENGINEER

Halff Associates, Inc.
ENGINEERS · ARCHITECTS · SCIENTISTS · PLANNERS · SURVEYORS
403 WEST MILITARY, SUITE 702
McALLEN, TEXAS 78503
TEL. (956) 664-0200
FAX. (956) 664-0203

Project No. AVO # 23851
Scale: 30-0-06

No.	Date	Description

Drawn by: BB
Checked by: FJG

Sheet Title
ALTERNATE BULKHEAD SECTION

Sheet Number
S-4

SWG-2007-00818

w:\DAL\23000s\23851\CADD\Bulkhead\23851_S5.dgn 3:23:56 PM 9/1/2006 User=Steve Guerra Active Project=AEC Workspace

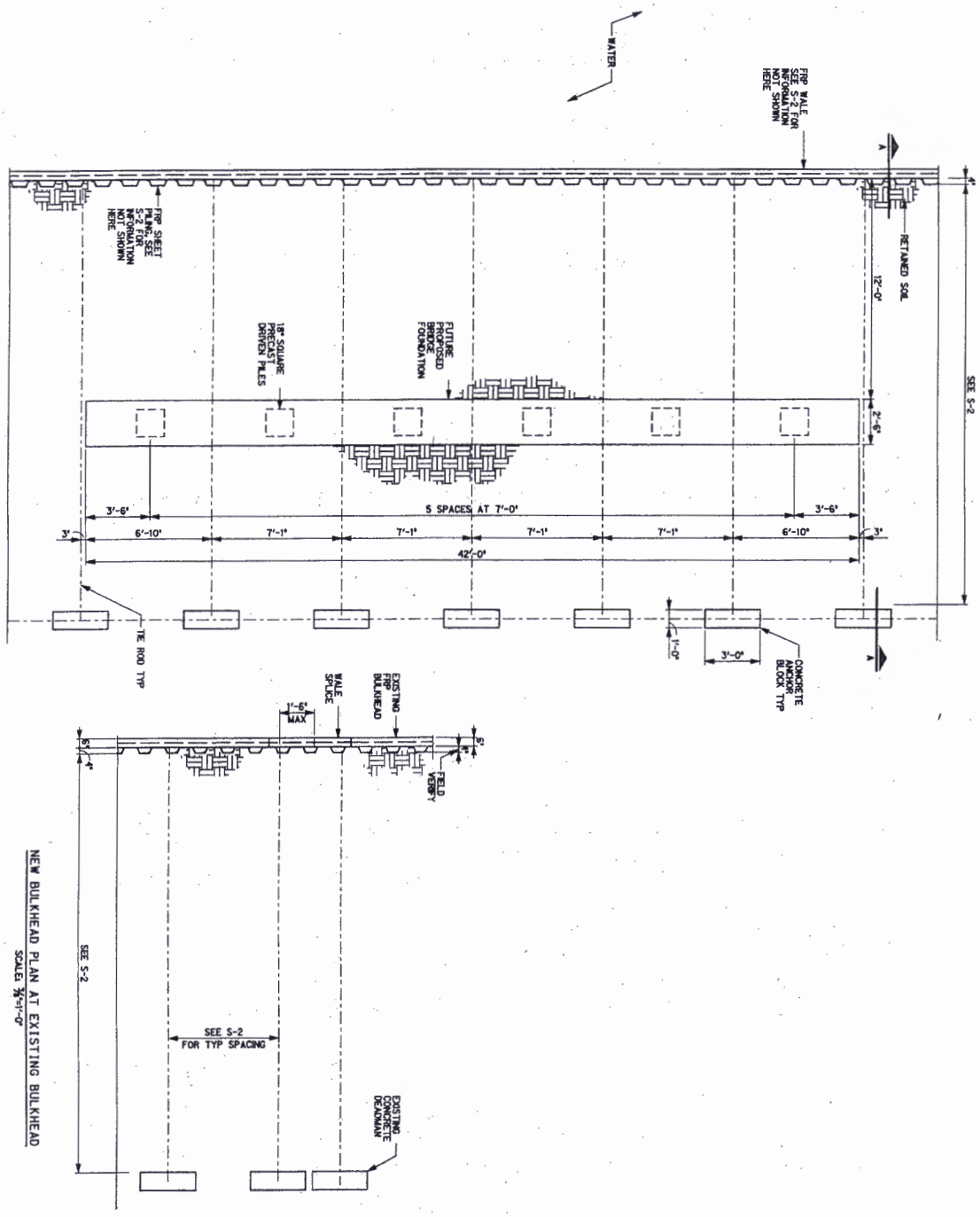

Halff Associates, Inc.

ENGINEERS • ARCHITECTS • SCIENTISTS • PLANNERS • SURVEYORS

4600 WEST MILITARY, SUITE 700
McALLEN, TEXAS 78503
TEL. (956) 664-0256
FAX (956) 664-0282

Sheet Number S-5

ENLARGED PLANS

Date: AUG 2, 2006

THE SHORES SUBDIVISION
MARINA VILLAGE PHASE
SECTION 2
SOUTH PADRE ISLAND, TEXAS

SWG-2007-00818

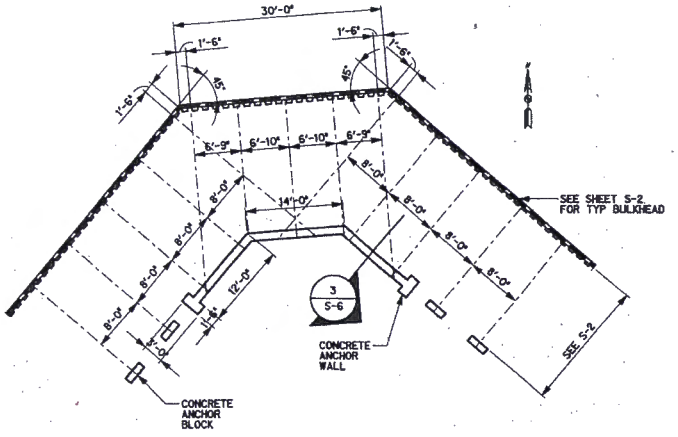

1 / S-6 BULKHEAD LAYOUT 1
SCALE: 1/8"=1'-0"

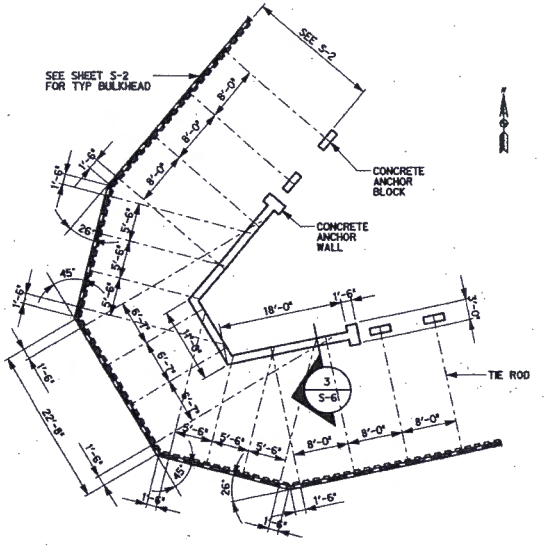

2 / S-6 BULKHEAD LAYOUT 2
SCALE: 1/8"=1'-0"

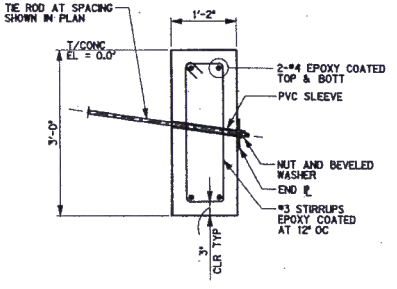

3 / S-6 CONCRETE ANCHOR WALL SECTION
SCALE: 3/4"=1'-0"

THE SHORES SUBDIVISION
MARINA VILLAGE PHASE
SECTION 2
SOUTH PADRE ISLAND, TEXAS

STATE OF TEXAS
FRANK S. GRIFFIN, JR.
87724
LICENSED
PROFESSIONAL ENGINEER
9/1/06

Halff Associates, Inc.
ENGINEERS · ARCHITECTS · SCIENTISTS · PLANNERS · SURVEYORS
4400 WEST MILITARY, SUITE 700
McALLEN, TEXAS 78503
TEL (956) 664-4200
FAX (956) 664-4202

Project No. HAI Q # 23851
Scale: AS-SHOWN

Revisions		
No.	Date	Description

Drawn by: MS
Checked by: FJG
Sheet Title: BULKHEAD LAYOUT PLANS
S-6

I:\23000s\23851\cadd\bulkhead\23851_s6.dgn 3:05:41 PM 9/1/2006 Steve Guerra Active Project=AEC Workspace

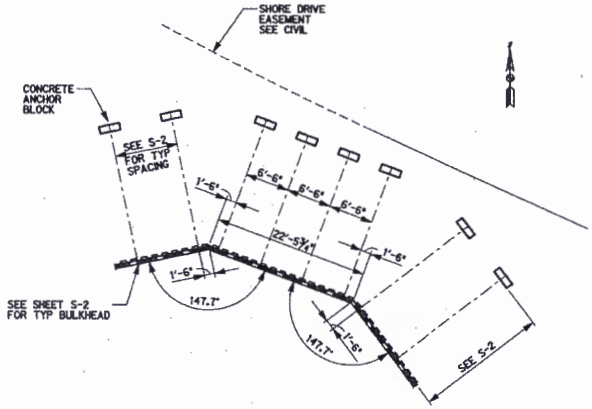

1 / S-7 BULKHEAD LAYOUT 3
SCALE: 1/8"=1'-0"

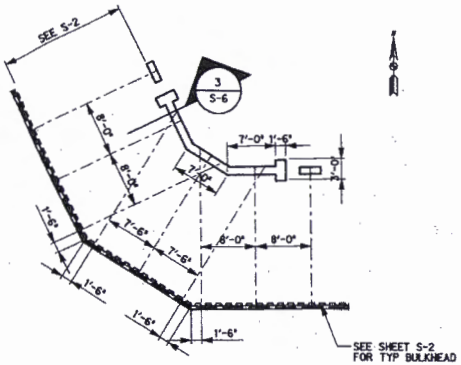

2 / S-7 BULKHEAD LAYOUT 4
SCALE: 1/8"=1'-0"

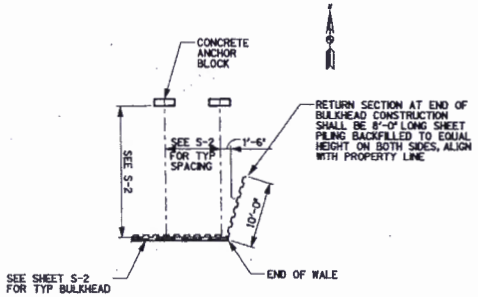

3 / S-7 BULKHEAD LAYOUT 5
SCALE: 1/8"=1'-0"

THE SHORES SUBDIVISION
MARINA VILLAGE PHASE
SECTION 2
SOUTH PADRE ISLAND, TEXAS

9/1/06
STATE OF TEXAS
FRANK S. GRIFFIN, JR.
87724
LICENSED
PROFESSIONAL ENGINEER

Halff Associates, Inc.
ENGINEERS • ARCHITECTS • SCIENTISTS • PLANNERS • SURVEYORS
4601 WEST MILITARY, SUITE 160
MCALLEN, TEXAS 78503
TEL (956) 664-0286
FAX (956) 664-0383

Project Mgr. AVO # 23851
Date(s): 08-01-05

No.	Date	Description

Drawn by: RR
Checked by: FJR

Sheet Title
BULKHEAD LAYOUT PLANS

Sheet Number
S-7

SWG-2007-00818

pg 15 of 17

N:\23000s\23851\cadd\bulkhead\23851_s7.dgn 3:05:45 PM 9/1/2006 Steve Guerra Active Project=AEC Workspace

SWG-2007-00818

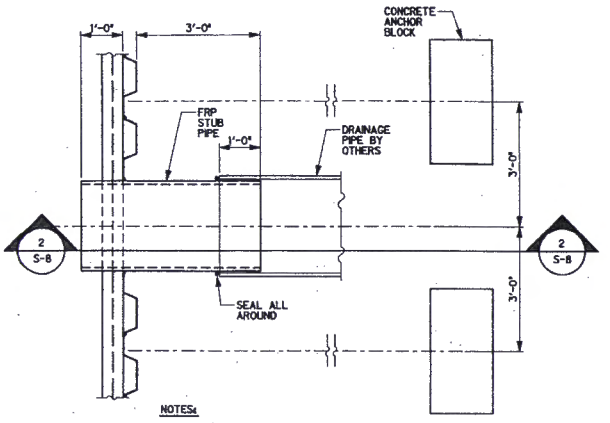

NOTES:

1. COORDINATE CONNECTION OF FRP STUB PIPE w/ DRAINAGE PIPE PROVIDED. SEE CIVIL SHEETS FOR SIZES, MATERIALS & ELEVATIONS.

1 S-8 BULKHEAD PENETRATION PLAN
SCALE: 3/4"=1'-0"

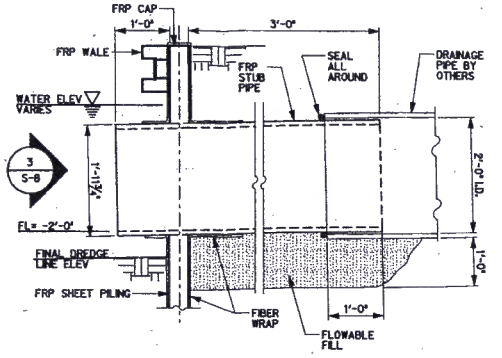

NOTES:

1. COORDINATE CONNECTION OF FRP STUB PIPE w/ DRAINAGE PIPE PROVIDED. SEE CIVIL SHEETS FOR SIZES, MATERIALS & ELEVATIONS.

2 S-8 BULKHEAD PENETRATION SECTION
SCALE: 1"=1'-0"

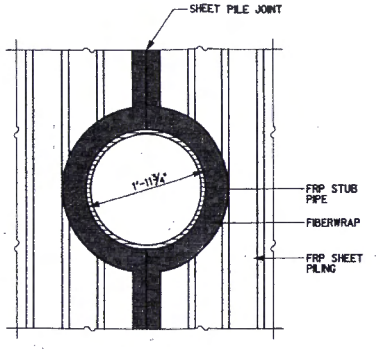

NOTES:

1. PENETRATION SHALL BE PREFABRICATED, 1-PIECE COMPONENT USING FRP SHEET PILE SECTIONS, FRP PIPE AND FIBERWRAP AS SHOWN, OR SIMILAR. SUBMIT SHOP DRAWING TO ENGINEER FOR APPROVAL PRIOR TO INSTALLATION.
2. OPENING SHALL BE COMPLETELY SEALED AGAINST WATER PENETRATION.
3. CONTRACTOR SHALL ENSURE THAT SHEET PILING AND STUB PIPE ARE NOT DAMAGED DURING INSTALLATION. WATER TIGHTNESS SHALL BE TESTED PRIOR TO BACKFILL OPERATIONS.
4. AT CONTRACTOR'S OPTION, PIPE PENETRATION MAY BE FIELD FABRICATED AFTER SHEET PILE INSTALLATION, IN LIEU OF DETAIL SHOWN.

3 S-8 BULKHEAD PENETRATION DETAIL
SCALE: 1"=1'-0"

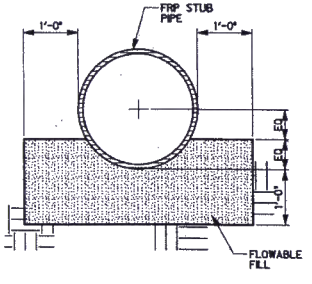

4 S-8 TRENCH SECTION AT STUB PIPE
SCALE: 1"=1'-0"

THE SHORES SUBDIVISION
MARINA VILLAGE PHASE
SECTION 2
SOUTH PADRE ISLAND, TEXAS

9/1/06
STATE OF TEXAS
FRANK S. GRIFFIN, JR.
87724
LICENSED
PROFESSIONAL ENGINEER

Halff Associates, Inc.
ENGINEERS · ARCHITECTS · SCIENTISTS · PLANNERS · SURVEYORS
4400 WEST MILITARY, SUITE 700
McALLEN, TEXAS 78503
TEL (956) 664-0386
FAX (956) 664-0382

Project No. AVG # 23851
Issued: 02-01-06

Revisions		
No.	Date	Description

Drawn by: BB
Checked by: FJG
Sheet Title: BULKHEAD DETAILS
Sheet Number: S-8

Pg 16 of 17

#\23006s\23851\cadd\bulkhead\23851_s8.dgn 3:05:51 PM 9/1/2006 Steve Guerra Active Project=AEC Workspace

MAR 05 2019

SWG-2007-00818

NORTH

0 100 200 300 400

SCALE: 1"=200'

TOTAL EROSION
8.6461 ACRES

TOTAL LAND REMOVAL
0.8229 ACRES

CURRENT ISLANDS

COMPLETED BULKHEAD

FUTURE BULKHEAD

THE SHORES

South Padre Island
Texas

HALFF

Revision		
No.	Date	Description

Project No.	36713-001
Issued	FEBRUARY 2019
Drawn By:	FC
Checked By:	RS
Scale	AS NOTED
Sheet Title	EROSION EXHIBIT
Sheet Number	EX101

Pg 17 of 17