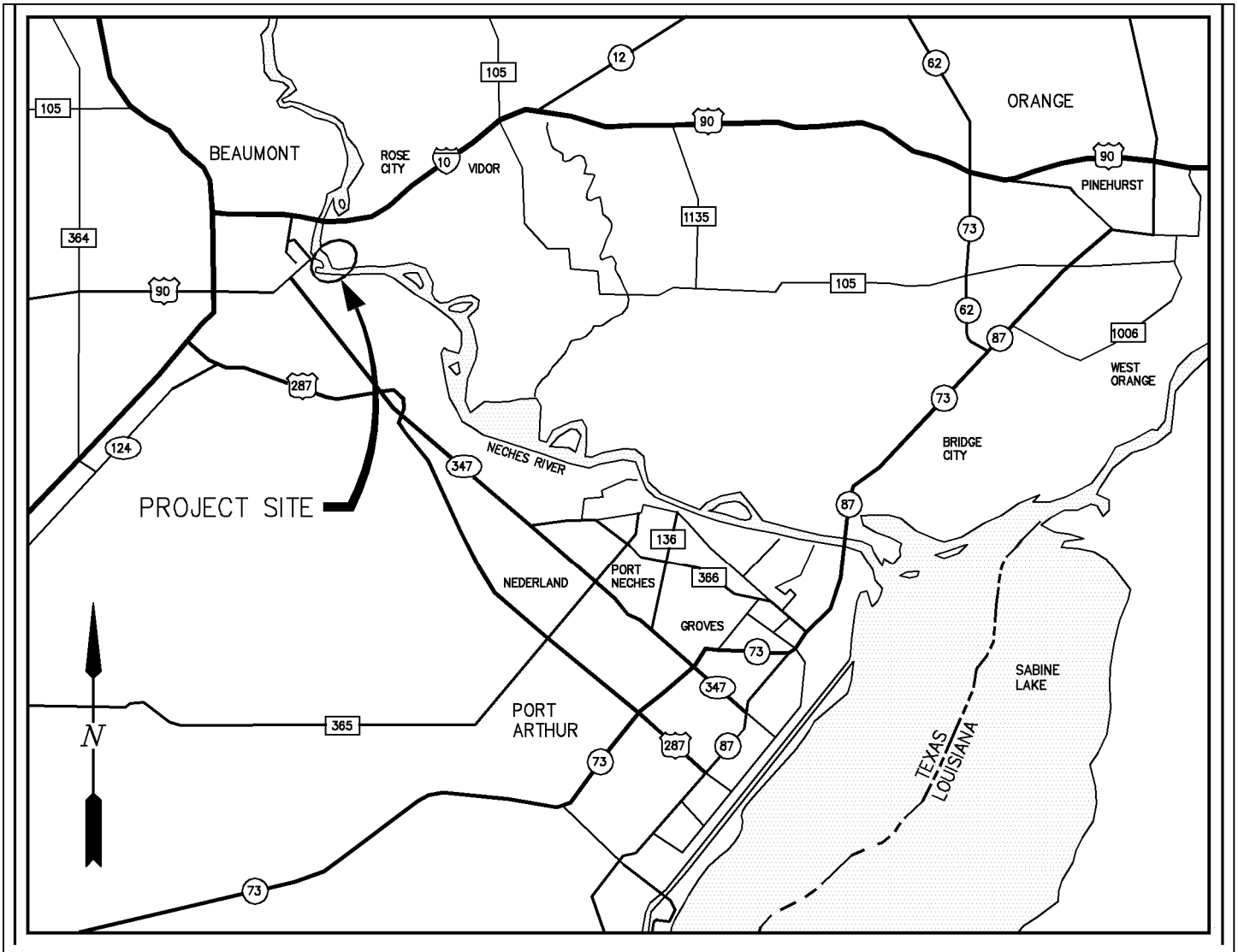

GENERAL NOTES

1. STRUCTURES SHALL ALSO BE MARKED/LIGHTED IN ACCORDANCE WITH U.S. COAST GUARD REGULATIONS.
2. ALL ELEVATIONS REFER TO M.L.L.W. UNLESS NOTED OTHERWISE.
3. MEAN HIGH TIDE (MHT) = (+) 0.92' MLLW.

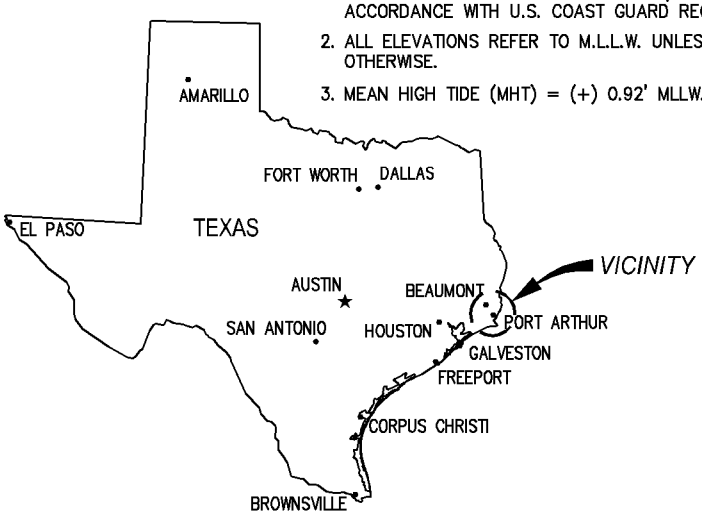

LAT: 30°04'41"N
LONG: 94°04'45"W

AREA MAP

DRAWING INDEX		
DRAWING NUMBER	DESCRIPTION	DATE SUBMITTED OR AUTHORIZED
1	VICINITY MAP AND DRAWING INDEX	APRIL 2018
2	LOCATION MAP	APRIL 2018
3	AERIAL IMAGE	APRIL 2018
4	EXISTING SITE PLAN	APRIL 2018
5–20	PERMIT MODIFICATIONS	APRIL 2018

10568–CP01

LANIER & ASSOCIATES
CONSULTING ENGINEERS
INCORPORATED
FIRM F–2981
NEW ORLEANS, LA · BEAUMONT, TX

PORT OF BEAUMONT
BEAUMONT TEXAS

DEVELOPMENT OF ORANGE CO. PROPERTY
PROPOSED NEW SHIP DOCKS
VICINITY MAP AND DRAWING INDEX

DATE nov. '17
DESIGN BMB
DRAWN SLB
CHECK DLC
CONTRACT10568
SHEET No.
1 OF 20

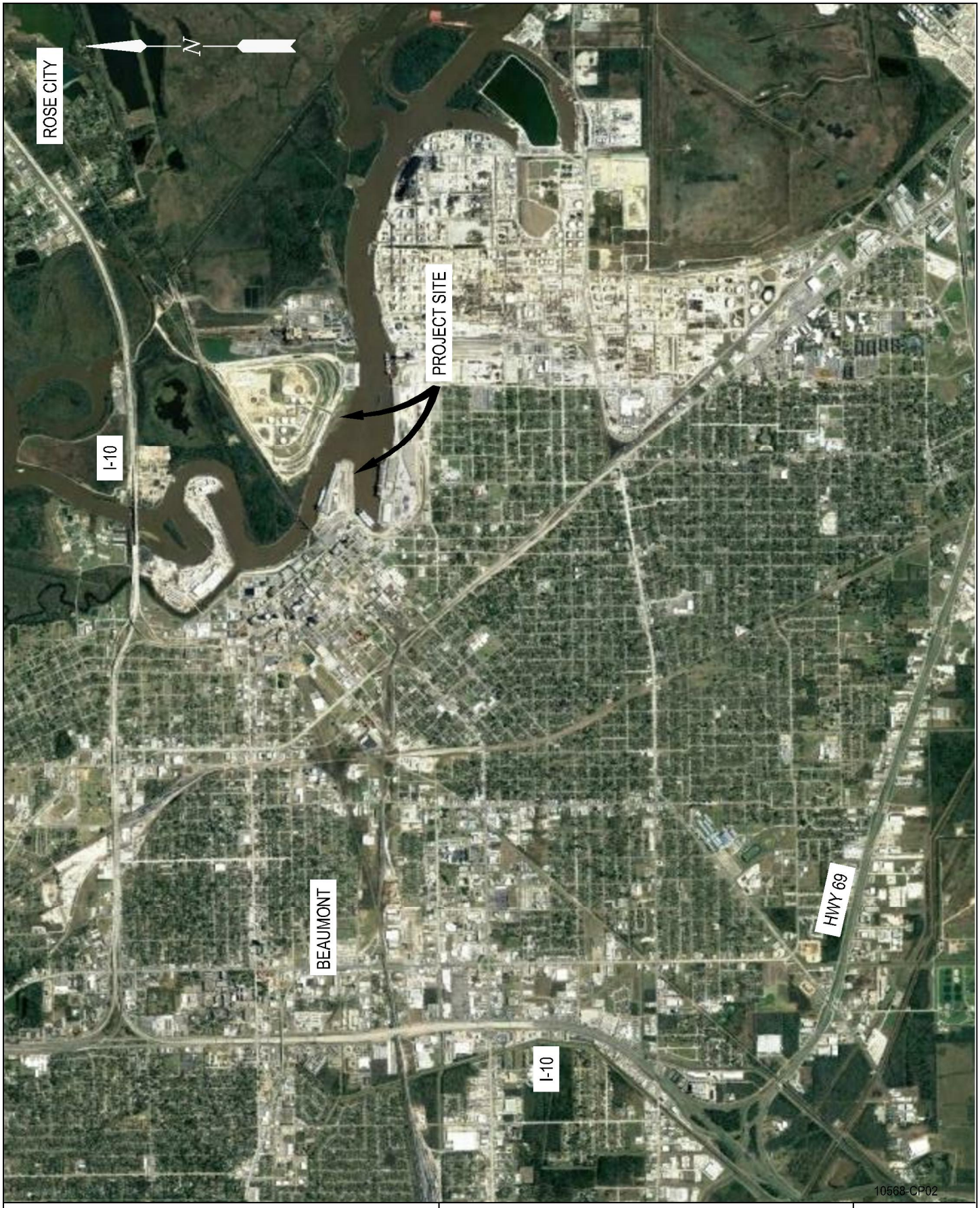

LANIER & ASSOCIATES
CONSULTING ENGINEERS
INCORPORATED
FIRM F-2981
NEW ORLEANS, LA · BEAUMONT, TX

PORT OF BEAUMONT
BEAUMONT TEXAS

DEVELOPMENT OF ORANGE CO. PROPERTY
PROPOSED NEW SHIP DOCKS
LOCATION MAP

DATE JUL.'18
DESIGN BMB
DRAWN SLB
CHECK DLC
CONTRACT 10568
SHEET No.
02 OF 20

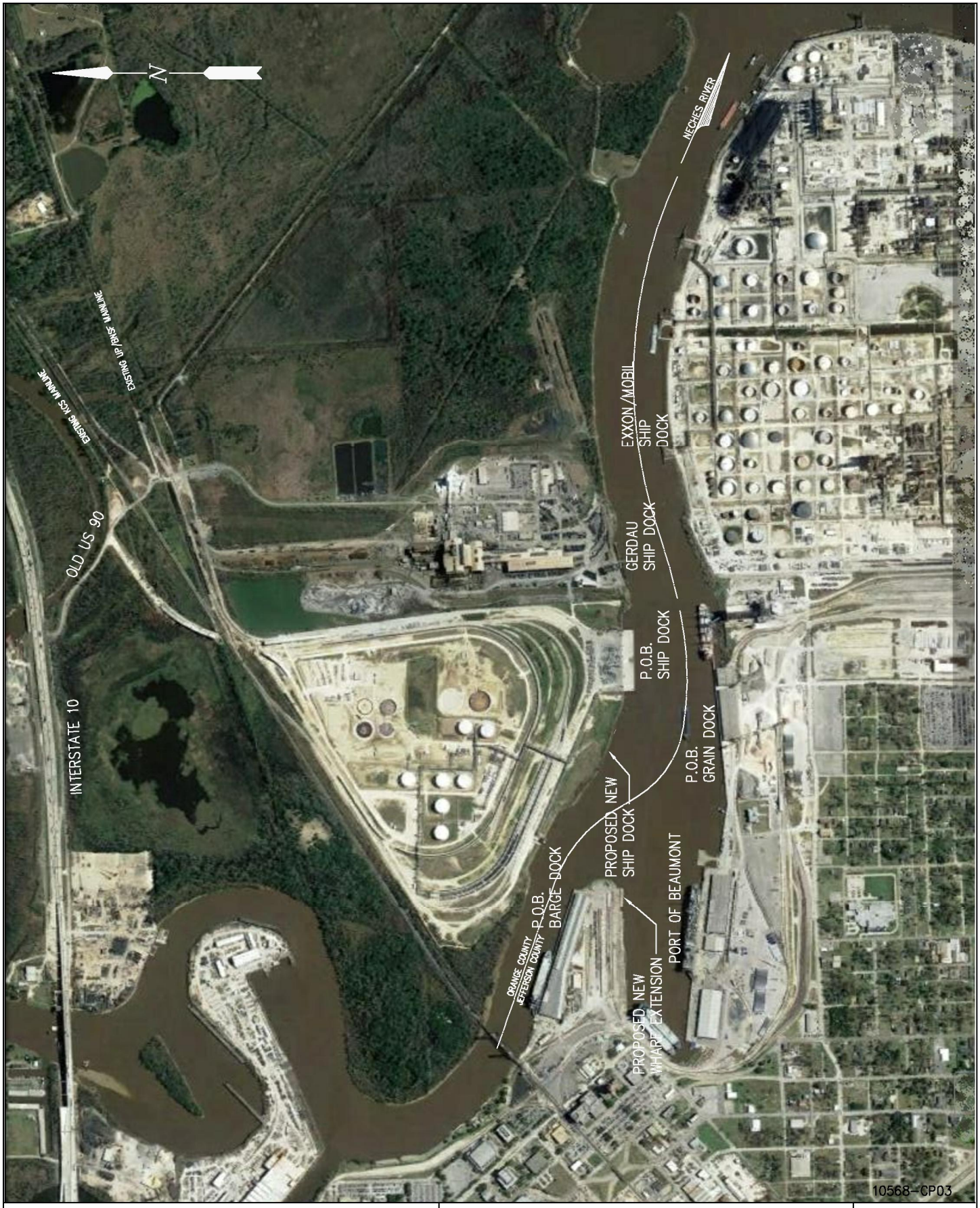

LANIER & ASSOCIATES
CONSULTING ENGINEERS
INCORPORATED
FIRM F-2981
NEW ORLEANS, LA · BEAUMONT, TX

PORT OF BEAUMONT
BEAUMONT TEXAS

DEVELOPMENT OF ORANGE CO. PROPERTY
PROPOSED NEW SHIP DOCKS
AERIAL IMAGE

DATE JUL.'18
DESIGN BMB
DRAWN SLB
CHECK DLC
CONTRACT10568
SHEET No.
3 OF 20

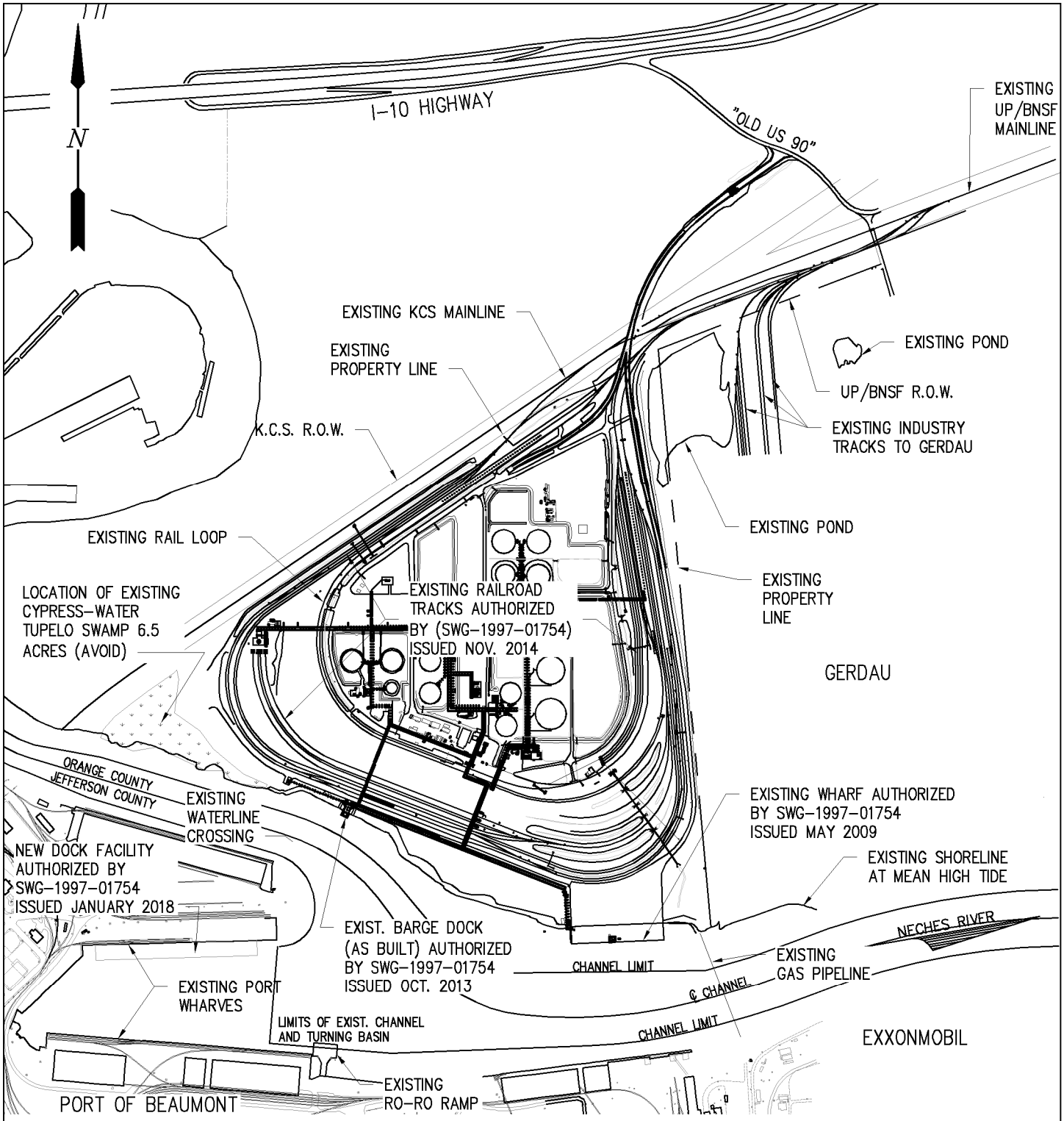

EXISTING SITE PLAN

-500 0 250 500 1000

(IN FEET)
GRAPHIC SCALE

NOTE

1. PREVIOUSLY PERMITTED WORK IS CURRENTLY UNDER CONSTRUCTION OR PLANNED FOR CONSTRUCTION.

LAT: 30°04'41"N
LONG: 94°04'45"W

10568-CP04

LANIER & ASSOCIATES
CONSULTING ENGINEERS
INCORPORATED
FIRM F-2981
NEW ORLEANS, LA · BEAUMONT, TX

PORT OF BEAUMONT
BEAUMONT TEXAS

U.S.A.C.E. PERMIT MODIFICATIONS
PROPOSED NEW SHIP DOCKS
EXISTING SITE PLAN

DATE NOV.'17
DESIGN BMB
DRAWN SLB
CHECK DLC
CONTRACT10568
SHEET No.
04 OF 20

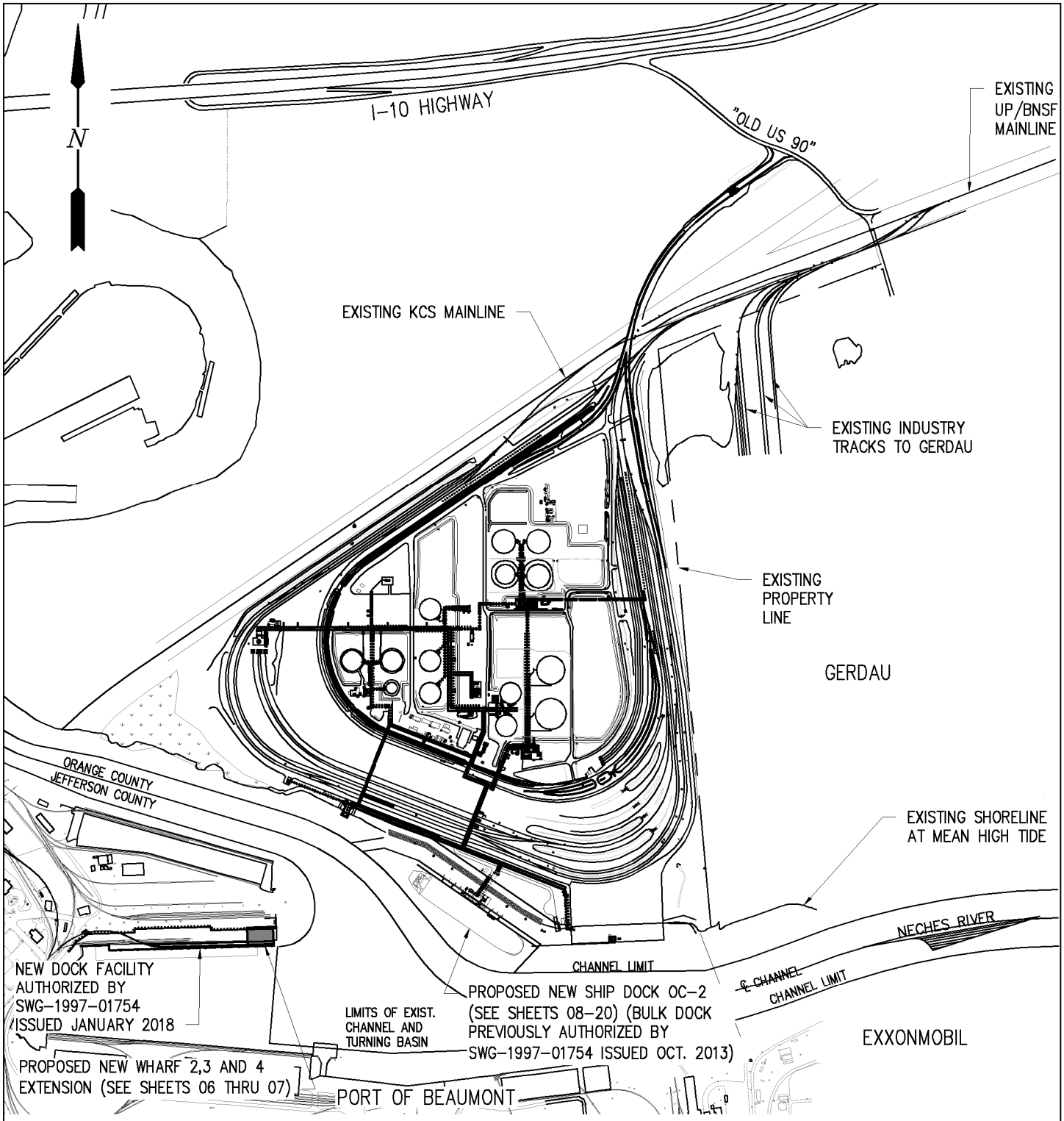

PROPOSED SITE PLAN

-500 0 250 500 1000

(IN FEET)
GRAPHIC SCALE

LAT: 30°04'41"N
LONG: 94°04'45"W

10568-CP05

LANIER & ASSOCIATES
CONSULTING ENGINEERS
INCORPORATED
FIRM F-2981
NEW ORLEANS, LA · BEAUMONT, TX

PORT OF BEAUMONT
BEAUMONT TEXAS

U.S.A.C.E. PERMIT MODIFICATIONS
PROPOSED NEW SHIP DOCKS
PROPOSED SITE PLAN

DATE NOV.'17
DESIGN BMB
DRAWN SLB
CHECK DLC
CONTRACT10568
SHEET No.
05 OF 20

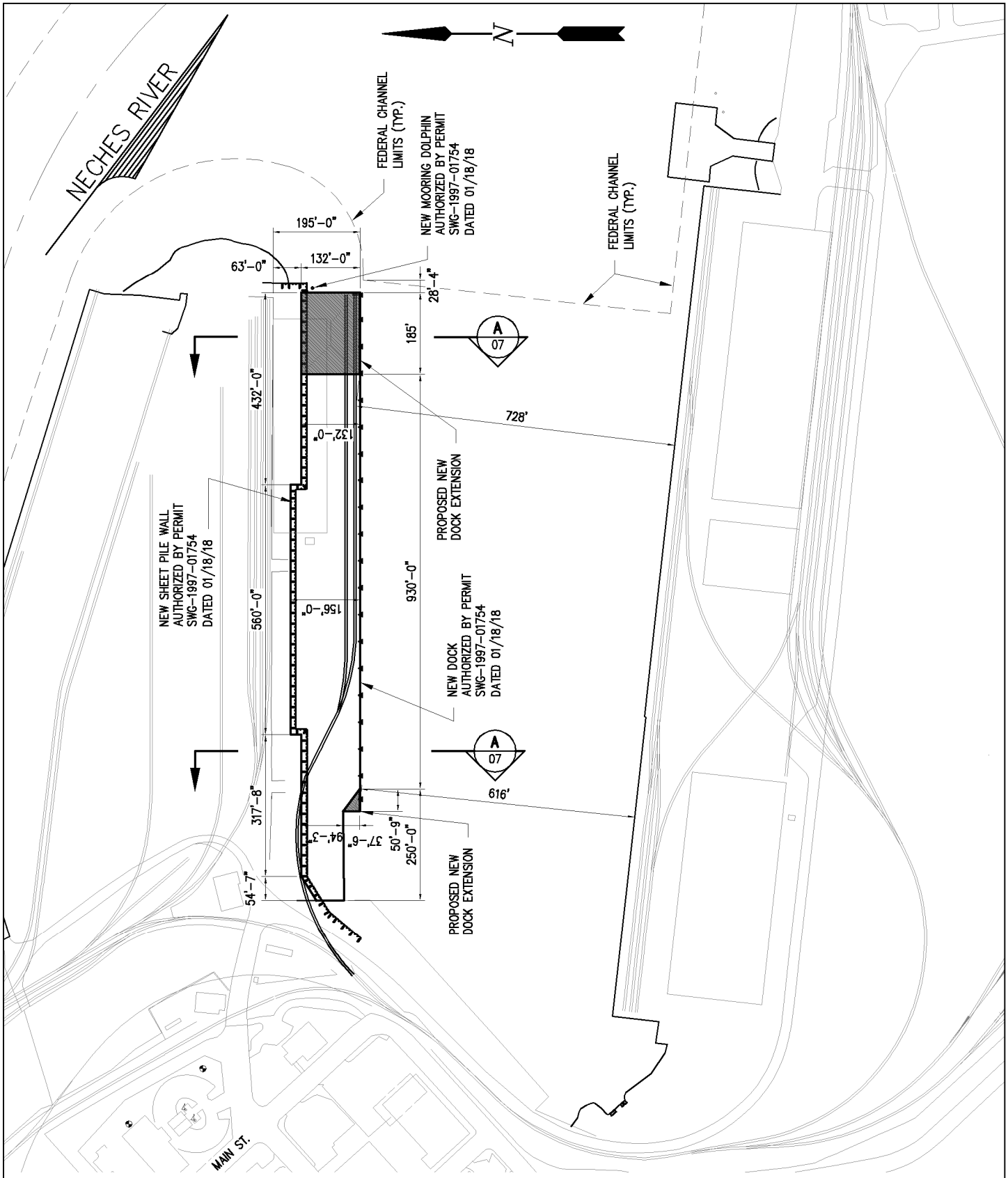

LAT: 30°04'41"N
LONG: 94°04'45"W

ENLARGED NEW SITE PLAN – DOCK 2, 3 AND 4

SCALE: 1" = 300'

10568–CP06

LANIER & ASSOCIATES
CONSULTING ENGINEERS
INCORPORATED
FIRM F–2981
NEW ORLEANS, LA · BEAUMONT, TX

PORT OF BEAUMONT
BEAUMONT TEXAS

U.S.A.C.E. PERMIT MODIFICATIONS
PROPOSED NEW SHIP DOCKS
ENLARGED NEW SITE PLAN - DOCK 2, 3 AND 4

DATE NOV.'17
DESIGN BMB
DRAWN SLB
CHECK DLC
CONTRACT 10568
SHEET No.
06 OF 20

GENERAL NOTES

1. STRUCTURES SHALL ALSO BE MARKED/LIGHTED IN ACCORDANCE WITH U.S. COAST GUARD REGULATIONS.
2. ALL ELEVATIONS REFER TO M.L.L.W. UNLESS NOTED OTHERWISE.

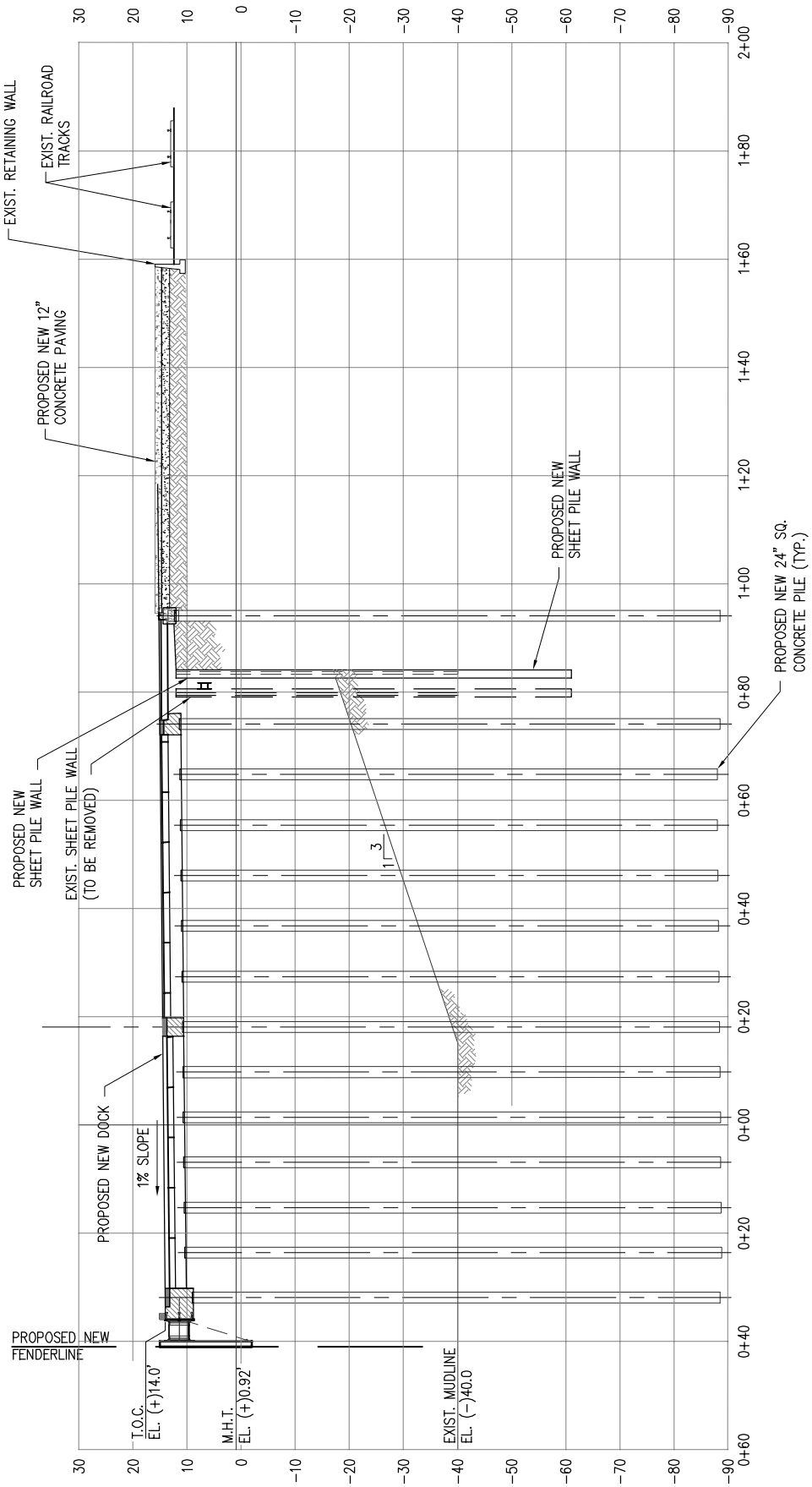

NOTE: PROPOSED NEW DOCK SECTION AND NEW DOCK SECTION AUTHORIZED BY PERMIT SWG-1997-01754 ARE IDENTICAL.

SECTION A 06

SCALE: 1" = 30'

10568-P07

LANIER & ASSOCIATES
CONSULTING ENGINEERS
INCORPORATED
FIRM F-2981
NEW ORLEANS, LA · BEAUMONT, TX

PORT OF BEAUMONT
BEAUMONT TEXAS

U.S.A.C.E. PERMIT MODIFICATIONS
PROPOSED NEW SHIP DOCKS
CROSS SECTION - DOCK 2, 3 AND 4

DATE NOV.'17
DESIGN BMB
DRAWN SLB
CHECK DLC
CONTRACT 10568
SHEET No.
07 OF 20

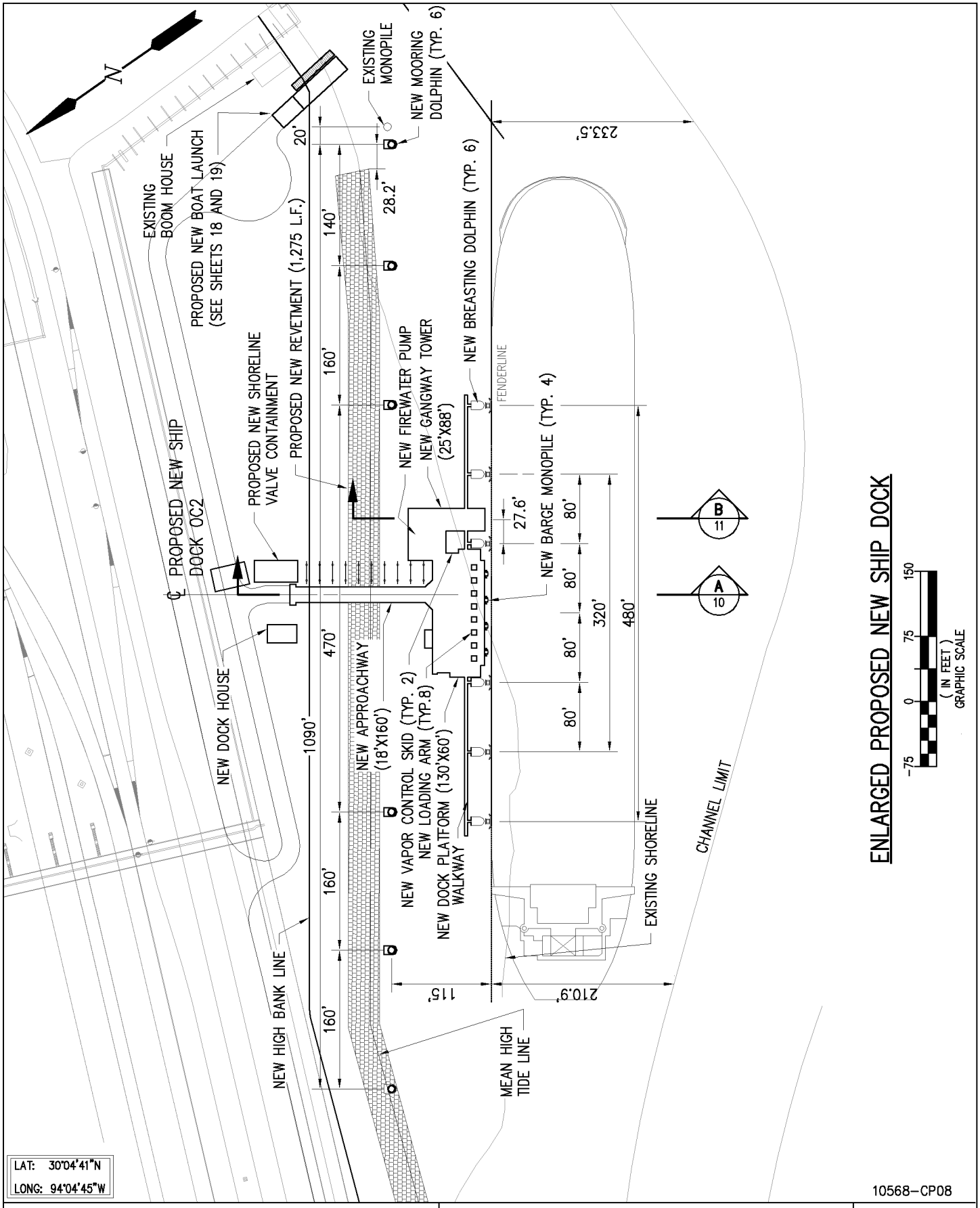

LANIER & ASSOCIATES
CONSULTING ENGINEERS
INCORPORATED
FIRM F-2981
NEW ORLEANS, LA · BEAUMONT, TX

PORT OF BEAUMONT
BEAUMONT TEXAS

U.S.A.C.E. PERMIT MODIFICATIONS
PROPOSED NEW SHIP DOCKS
ENLARGED PROPOSED NEW SHIP DOCK

DATE NOV.'17
DESIGN MJS
DRAWN SLB
CHECK DLC
CONTRACT10568
SHEET No.
08 OF 20

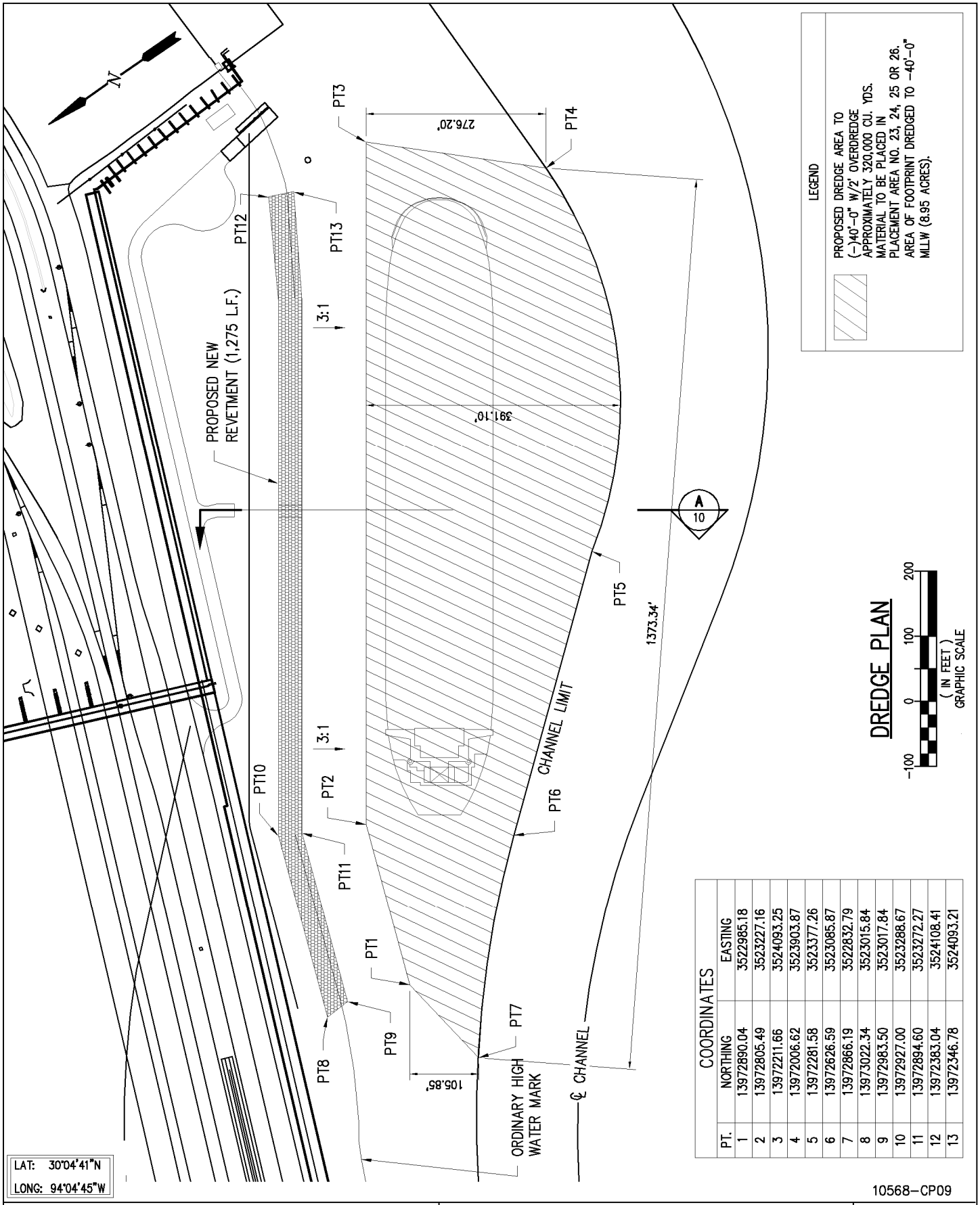

COORDINATES

PT.	NORTHING	EASTING
1	13972890.04	3522985.18
2	13972805.49	3523227.16
3	13972211.66	3524093.25
4	13972006.62	3523903.87
5	13972281.58	3523377.26
6	13972626.59	3523085.87
7	13972866.19	3522832.79
8	13973022.34	3523015.84
9	13972983.50	3523017.84
10	13972927.00	3523288.67
11	13972894.60	3523272.27
12	13972383.04	3524108.41
13	13972346.78	3524093.21

10568-CP09

LANIER & ASSOCIATES
CONSULTING ENGINEERS
INCORPORATED
FIRM F-2981
NEW ORLEANS, LA · BEAUMONT, TX

PORT OF BEAUMONT
BEAUMONT TEXAS

U.S.A.C.E. PERMIT MODIFICATIONS
PROPOSED NEW SHIP DOCKS
DREDGE PLAN - OC2 DOCK

DATE NOV.'17
DESIGN MJS
DRAWN SLB
CHECK DLC
CONTRACT10568
SHEET No.
09 OF 20

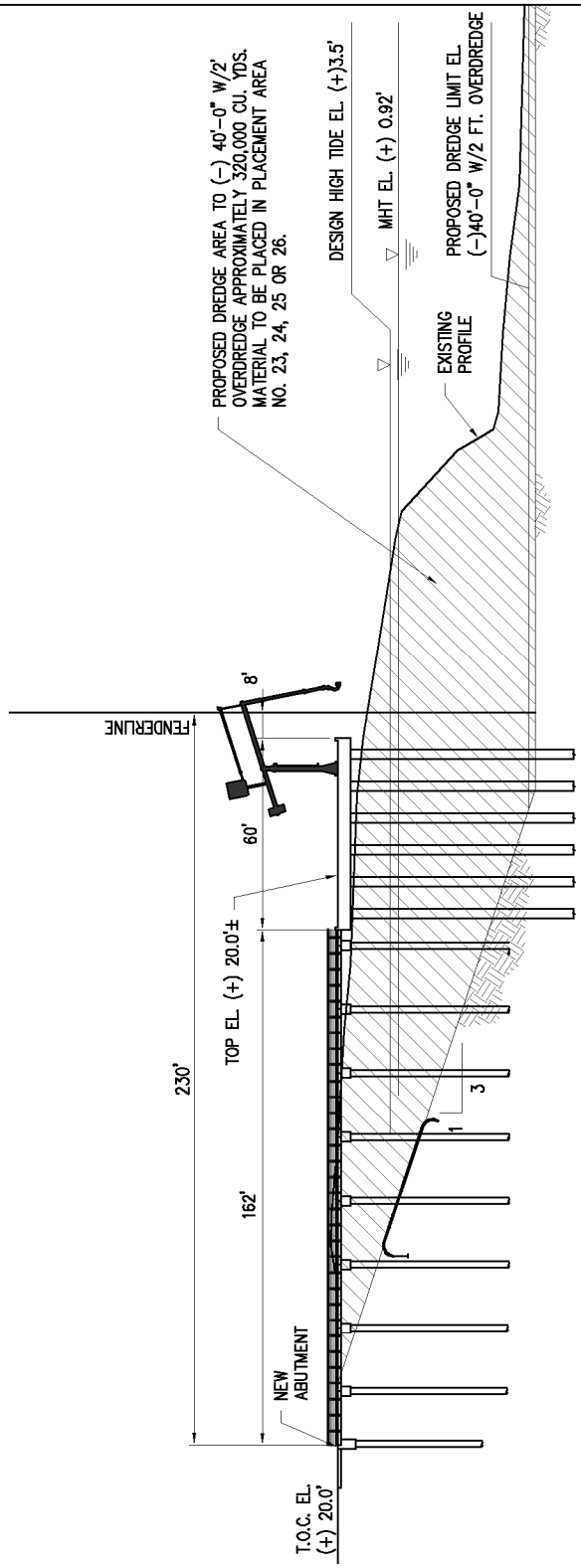

SECTION A 08 / A 09
SCALE: 1" = 60'-0"

-30 0 15 30 60
(IN FEET)
GRAPHIC SCALE

10568-CP10

LANIER & ASSOCIATES
CONSULTING ENGINEERS
INCORPORATED
FIRM F-2981
NEW ORLEANS, LA · BEAUMONT, TX

PORT OF BEAUMONT
BEAUMONT TEXAS

U.S.A.C.E. PERMIT MODIFICATIONS
PROPOSED NEW SHIP DOCKS
TYPICAL DOCK CROSS SECTION - OC2 DOCK

DATE NOV.'17
DESIGN BMB
DRAWN SLB
CHECK DLC
CONTRACT10568
SHEET No.
10 OF 20

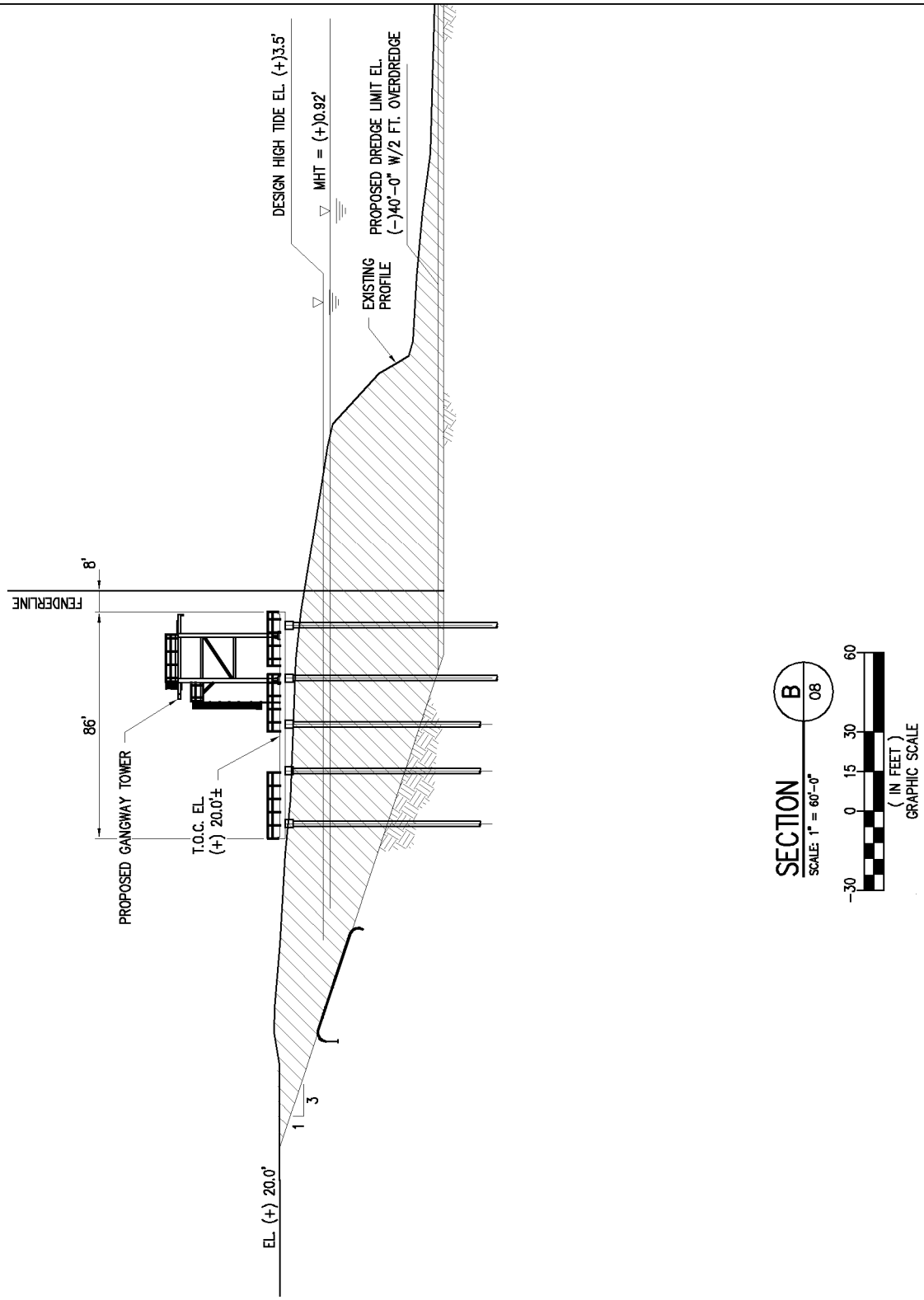

10568−CP11

LANIER & ASSOCIATES
CONSULTING ENGINEERS
INCORPORATED
FIRM F−2981
NEW ORLEANS, LA · BEAUMONT, TX

PORT OF BEAUMONT
BEAUMONT TEXAS

U.S.A.C.E. PERMIT MODIFICATIONS
PROPOSED NEW SHIP DOCKS
TYPICAL GANGWAY CROSS SECTION

DATE NOV.'17
DESIGN BMB
DRAWN SLB
CHECK DLC
CONTRACT10568
SHEET No.
11 OF 20

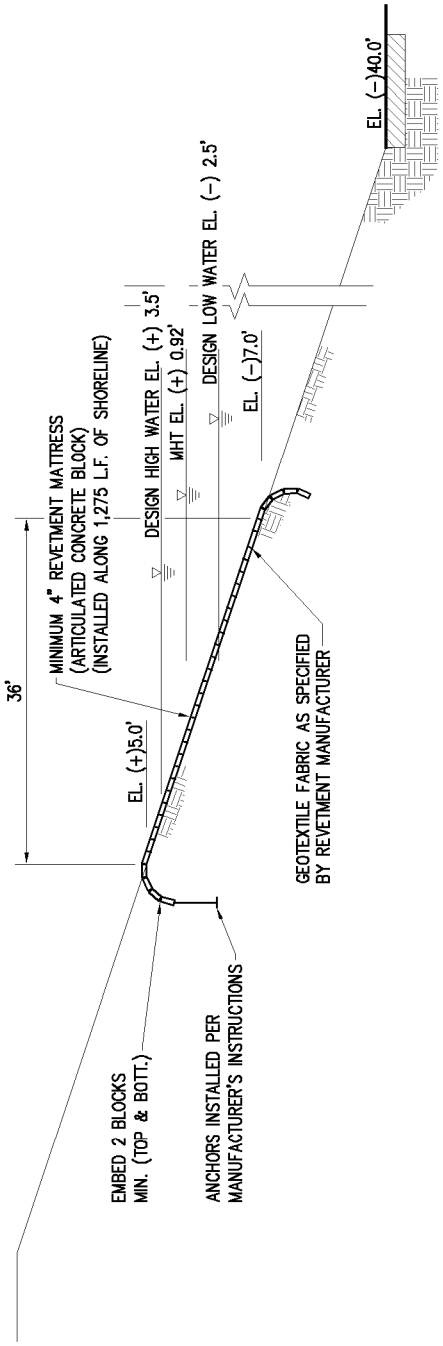

374 C.Y. OF FILL MATERIAL
ASSOCIATED WITH THE REVETMENT.

TYPICAL REVETMENT CROSS SECTION

SCALE: 1/16" = 1'-0"

10568-CP12

LANIER & ASSOCIATES
CONSULTING ENGINEERS
INCORPORATED
FIRM F-2981
NEW ORLEANS, LA · BEAUMONT, TX

PORT OF BEAUMONT
BEAUMONT TEXAS

U.S.A.C.E. PERMIT MODIFICATIONS
PROPOSED NEW SHIP DOCKS
TYPICAL REVETMENT CROSS SECTION

DATE NOV.'17
DESIGN BMB
DRAWN SLB
CHECK DLC
CONTRACT10568
SHEET No.
12 OF 20

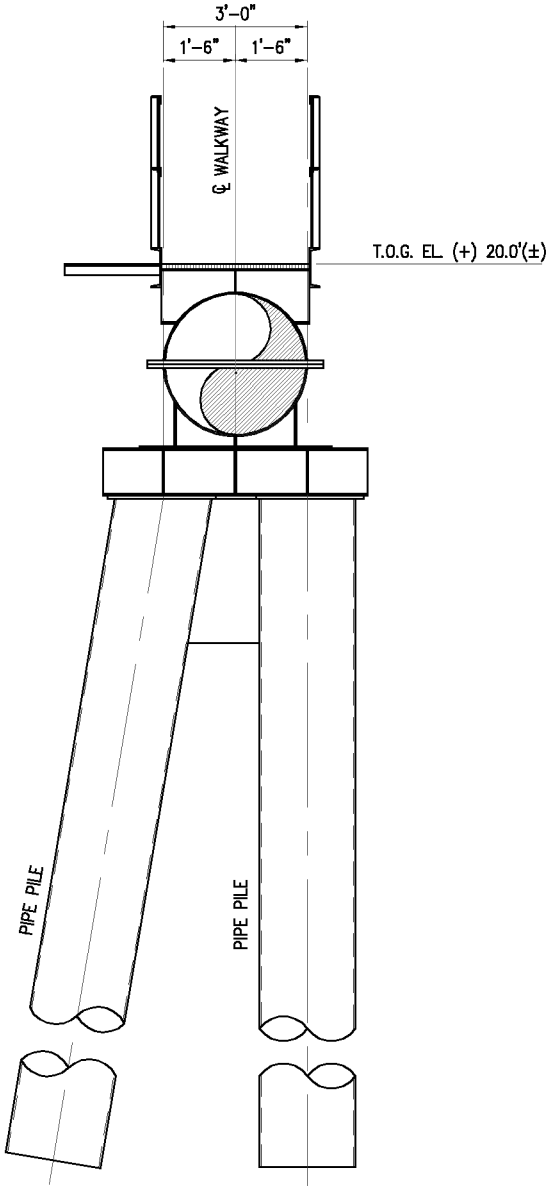

TYPICAL WALKWAY SUPPORT

N.T.S.

10568-CP13

LANIER & ASSOCIATES
CONSULTING ENGINEERS
INCORPORATED
FIRM F-2981
NEW ORLEANS, LA · BEAUMONT, TX

PORT OF BEAUMONT
BEAUMONT TEXAS

U.S.A.C.E. PERMIT MODIFICATIONS
PROPOSED NEW SHIP DOCKS
TYPICAL WALKWAY SUPPORT

DATE DEC '17
DESIGN MJS
DRAWN DMH
CHECK DLC
CONTRACT10568
SHEET No.
13 OF 20

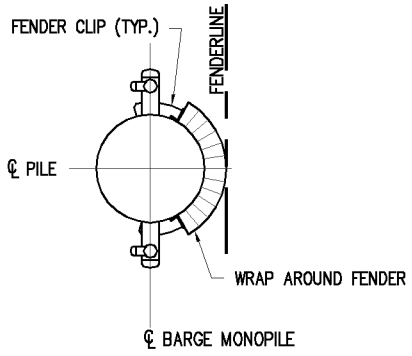

BARGE MONOPILE PLAN

N.T.S.

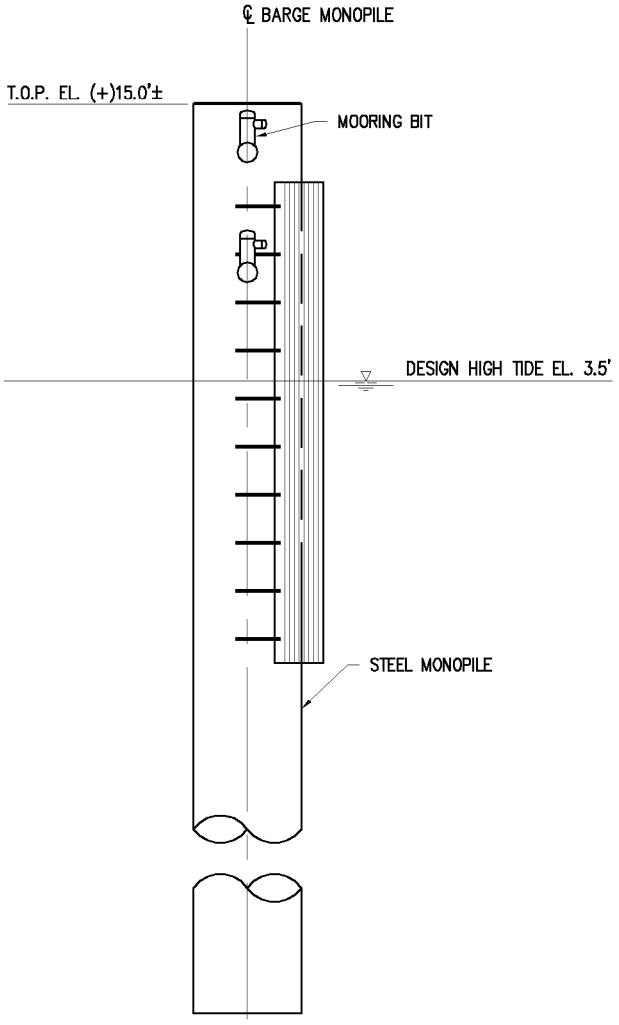

BARGE MONOPILE ELEVATION

N.T.S.
(4 REQUIRED)

10568–CP14

LANIER & ASSOCIATES
CONSULTING ENGINEERS
INCORPORATED
FIRM F–2981
NEW ORLEANS, LA · BEAUMONT, TX

PORT OF BEAUMONT
BEAUMONT TEXAS

U.S.A.C.E. PERMIT MODIFICATIONS
PROPOSED NEW SHIP DOCKS
PROPOSED NEW BARGE MONOPILE

DATE DEC '17
DESIGN MJS
DRAWN DMH
CHECK DLC
CONTRACT10568
SHEET No.
14 OF 20

BREASTING DOLPHIN PLAN
N.T.S.

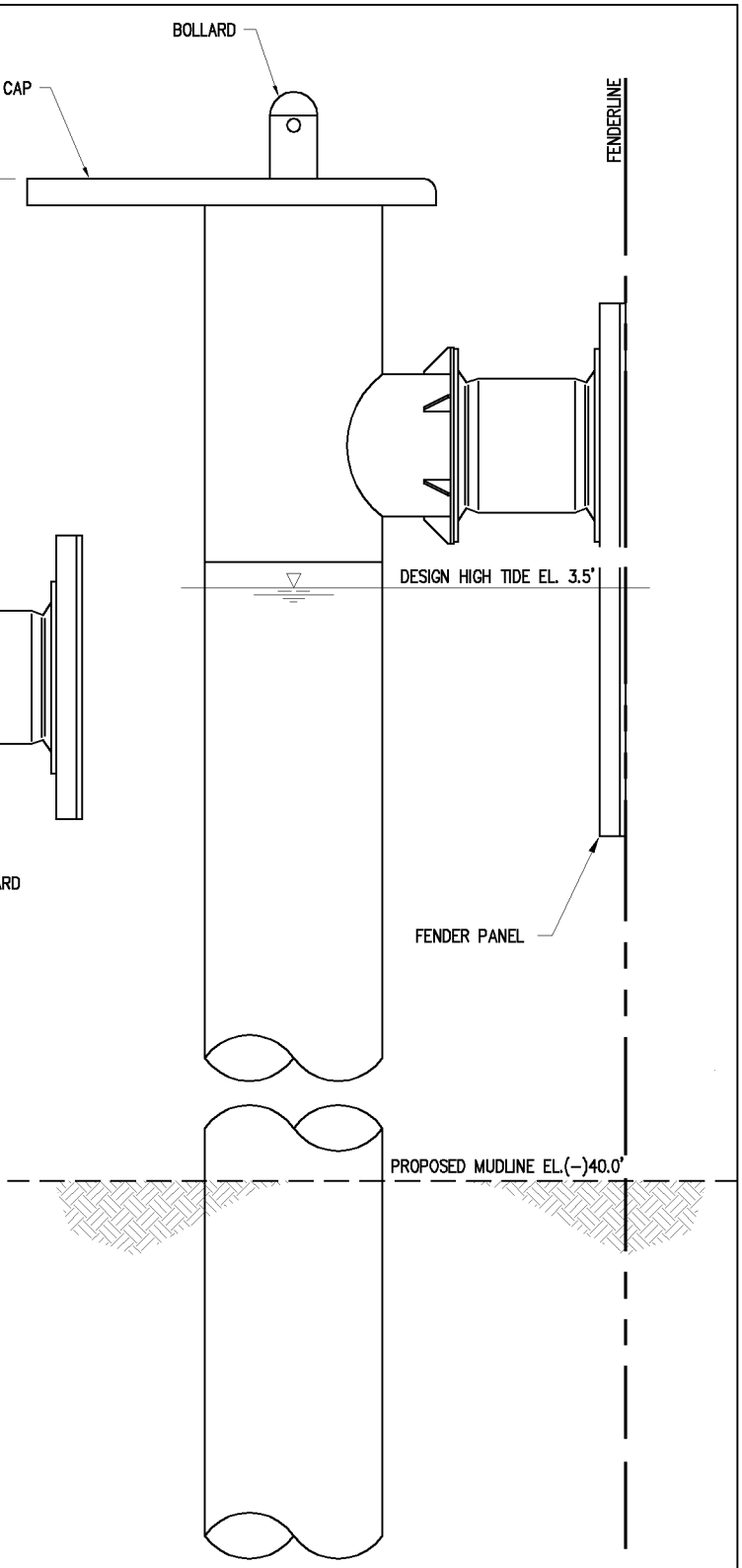

BREASTING DOLPHIN ELEVATION
N.T.S.
(6 REQUIRED)

10568-CP15

LANIER & ASSOCIATES
CONSULTING ENGINEERS
INCORPORATED
FIRM F-2981
NEW ORLEANS, LA · BEAUMONT, TX

PORT OF BEAUMONT
BEAUMONT TEXAS

U.S.A.C.E. PERMIT MODIFICATIONS
NEW SHIP DOCKS
PROPOSED NEW BREASTING DOLPHIN

DATE DEC '17
DESIGN MJS
DRAWN DMH
CHECK DLC
CONTRACT10568
SHEET No.
15 OF 20

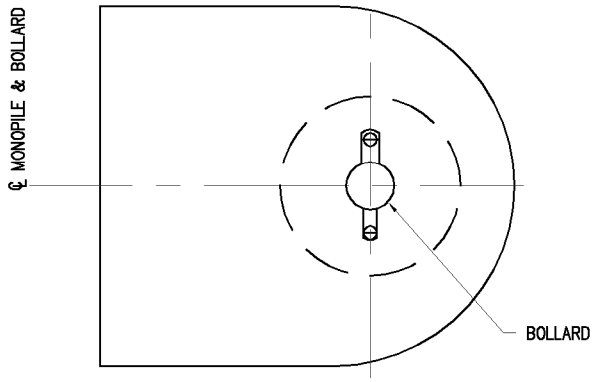

MOORING DOLPHIN PLAN
N.T.S.

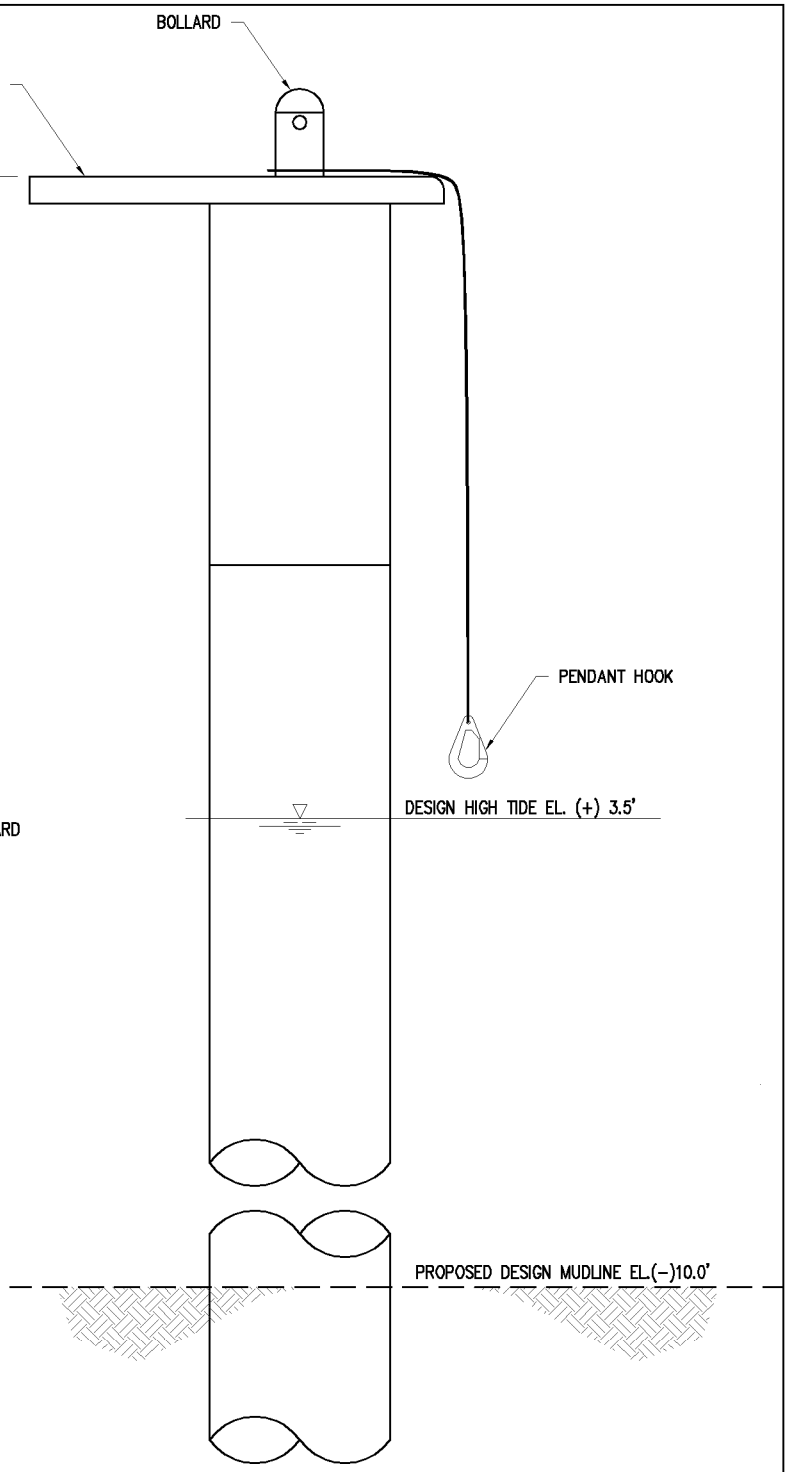

MOORING DOLPHIN ELEVATION
N.T.S.
(6 REQUIRED)

10568−CP16

LANIER & ASSOCIATES
CONSULTING ENGINEERS
INCORPORATED
FIRM F−2981
NEW ORLEANS, LA · BEAUMONT, TX

PORT OF BEAUMONT
BEAUMONT TEXAS

U.S.A.C.E. PERMIT MODIFICATIONS
PROPOSED NEW SHIP DOCKS
PROPOSED NEW MOORING DOLPHIN

DATE DEC '17
DESIGN MJS
DRAWN DMH
CHECK DLC
CONTRACT10568
SHEET No.
16 OF 20

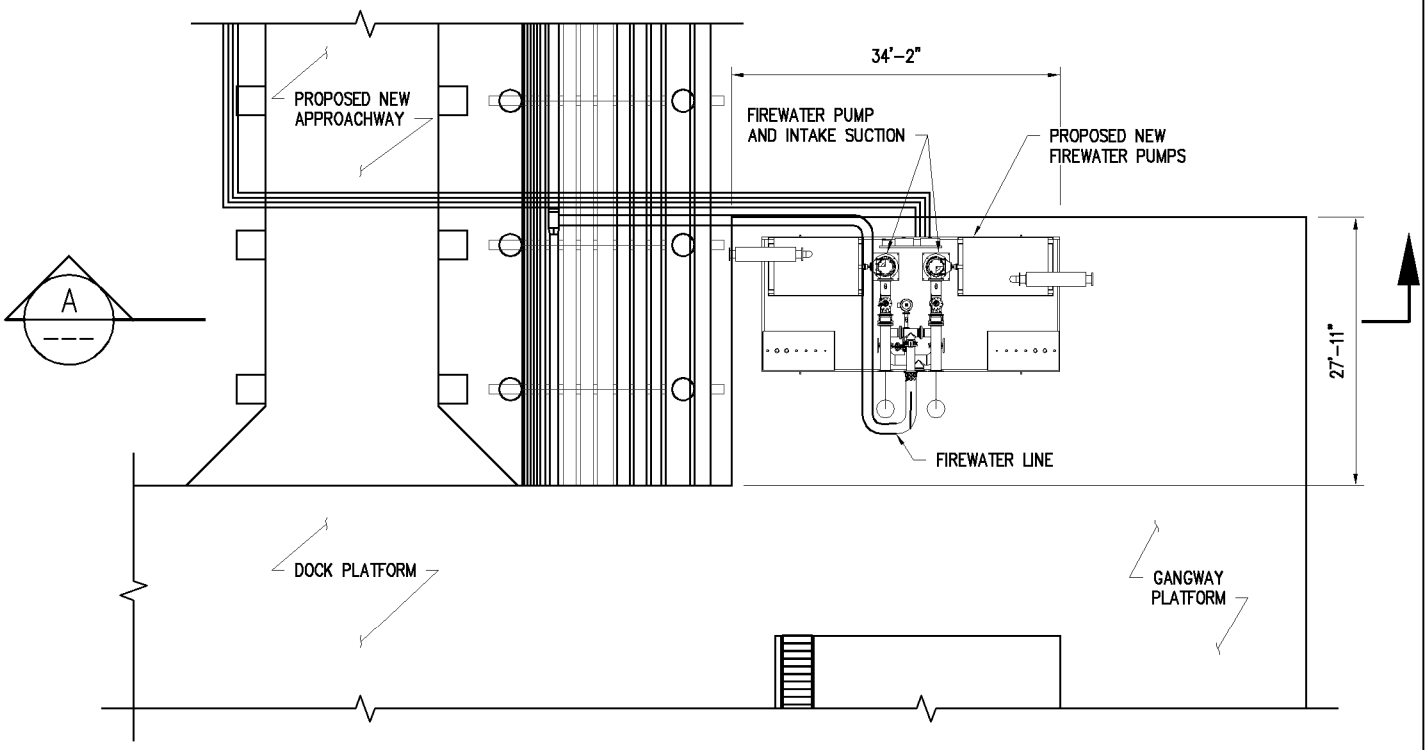

FIREWATER PUMP PLATFORM

SCALE: 1" = 20'-0"

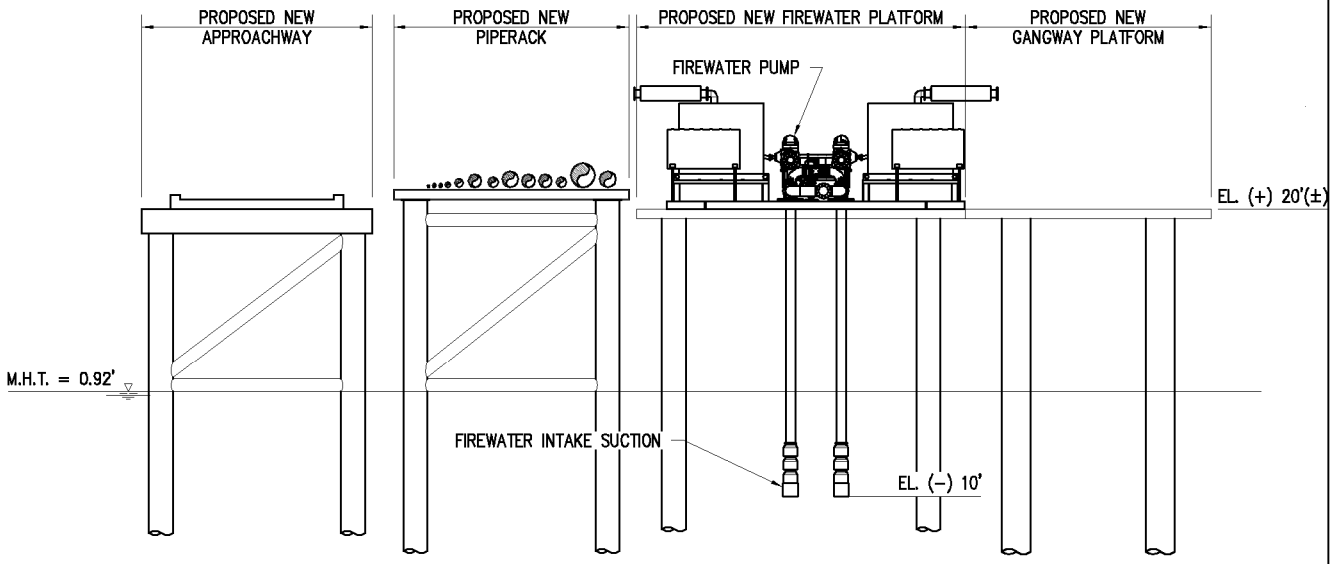

NOTE: THE PROPOSED FIRE PUMP INCLUDES TWO (2) MAIN INTAKES AND (1) BACKUP INTAKE THAT PENETRATE THE WATER TO A DEPTH OF APPROX. EL. (-) 10.0' MLLW FOR A TOTAL OF APPROX. 0.0001 ACRES (5 S.F.) OF IMPACTS.

SECTION A

SCALE: 1" = 20'-0"

10568-CP17

LANIER & ASSOCIATES
CONSULTING ENGINEERS
INCORPORATED
FIRM F-2981
NEW ORLEANS, LA · BEAUMONT, TX

PORT OF BEAUMONT
BEAUMONT TEXAS

U.S.A.C.E. PERMIT MODIFICATIONS
PROPOSED NEW SHIP DOCKS
FIREWATER PUMP

DATE NOV.'17
DESIGN BMB
DRAWN SLB
CHECK DLC
CONTRACT10568
SHEET No.
17 OF 20

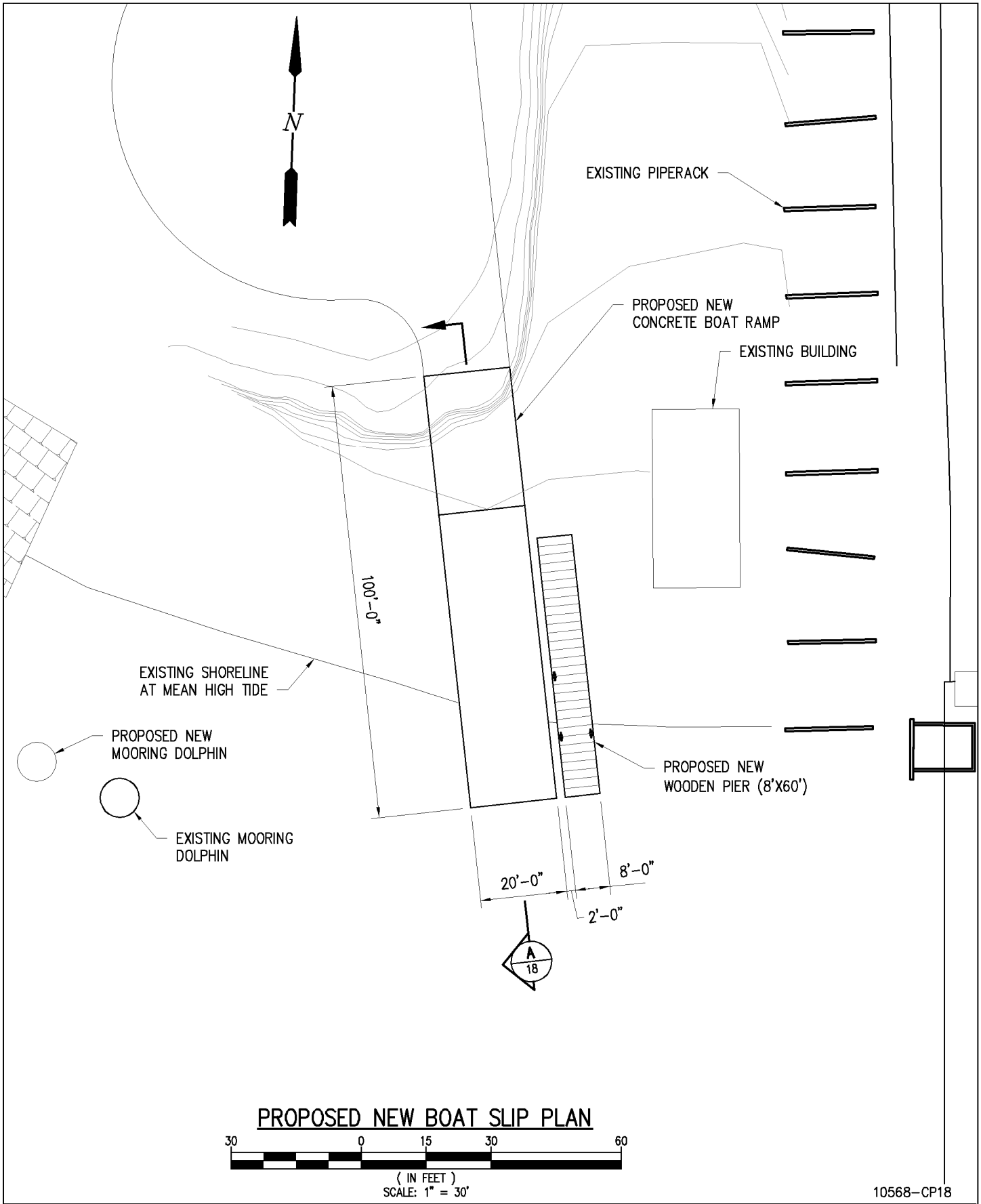

PROPOSED NEW BOAT SLIP PLAN

10568-CP18

LANIER & ASSOCIATES
CONSULTING ENGINEERS
INCORPORATED
FIRM F-2981
NEW ORLEANS, LA · BEAUMONT, TX

PORT OF BEAUMONT
BEAUMONT TEXAS

U.S.A.C.E. PERMIT MODIFICATIONS
PROPOSED NEW SHIP DOCKS
ENLARGED PROPOSED NEW BOAT SLIP

DATE JAN '15
DESIGN MJS
DRAWN DMH
CHECK DLC
CONTRACT10568
SHEET No.
18 OF 20

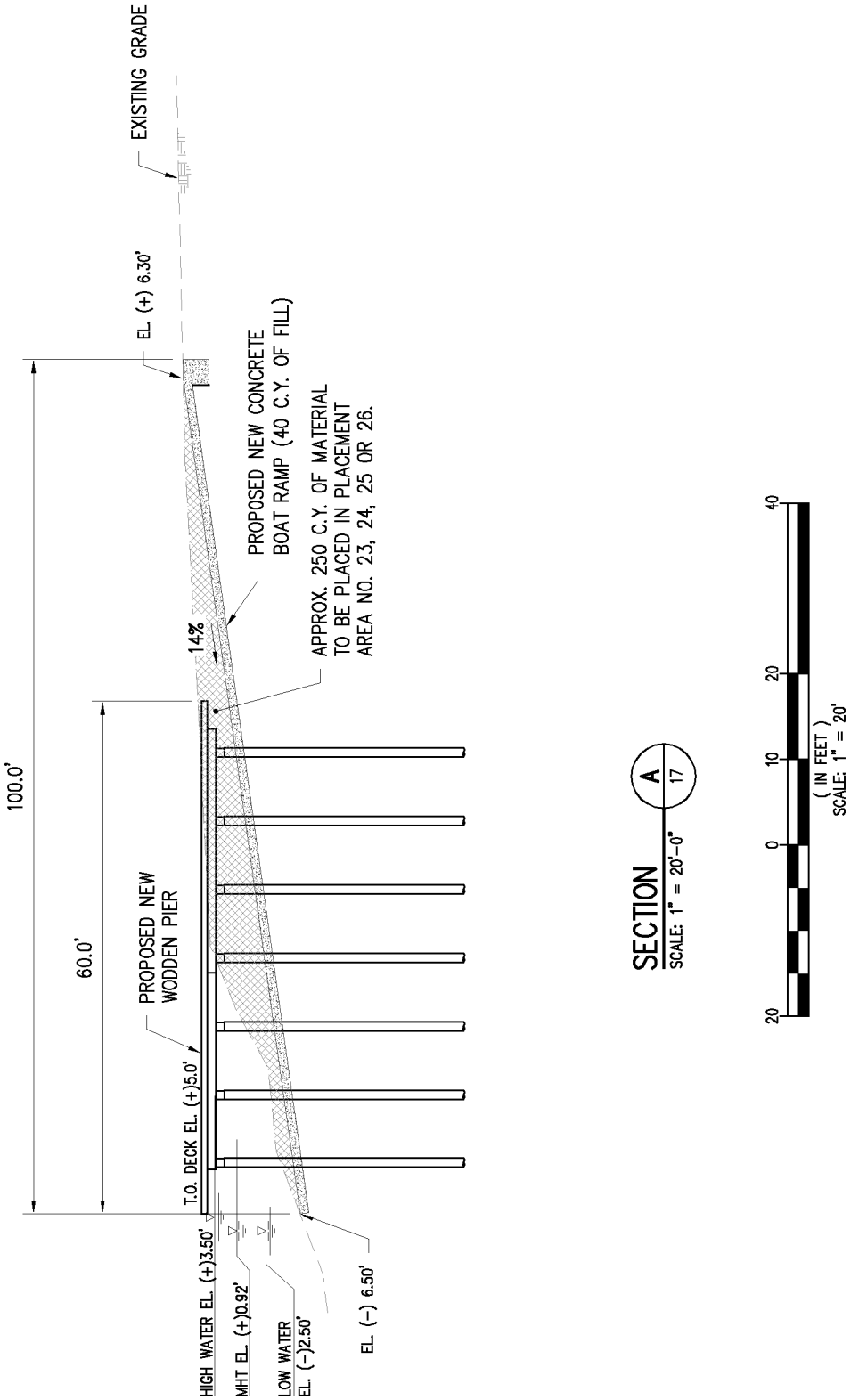

10568-CP19

LANIER & ASSOCIATES
CONSULTING ENGINEERS
INCORPORATED
FIRM F-2981
NEW ORLEANS, LA · BEAUMONT, TX

PORT OF BEAUMONT
PORT ARTHUR TEXAS

U.S.A.C.E. PERMIT MODIFICATIONS
PROPOSED NEW SHIP DOCKS
PROPOSED NEW BOAT SLIP SECTION

DATE NOV '17
DESIGN MJS
DRAWN DMH
CHECK DLC
CONTRACT10568
SHEET No.
19 OF 20

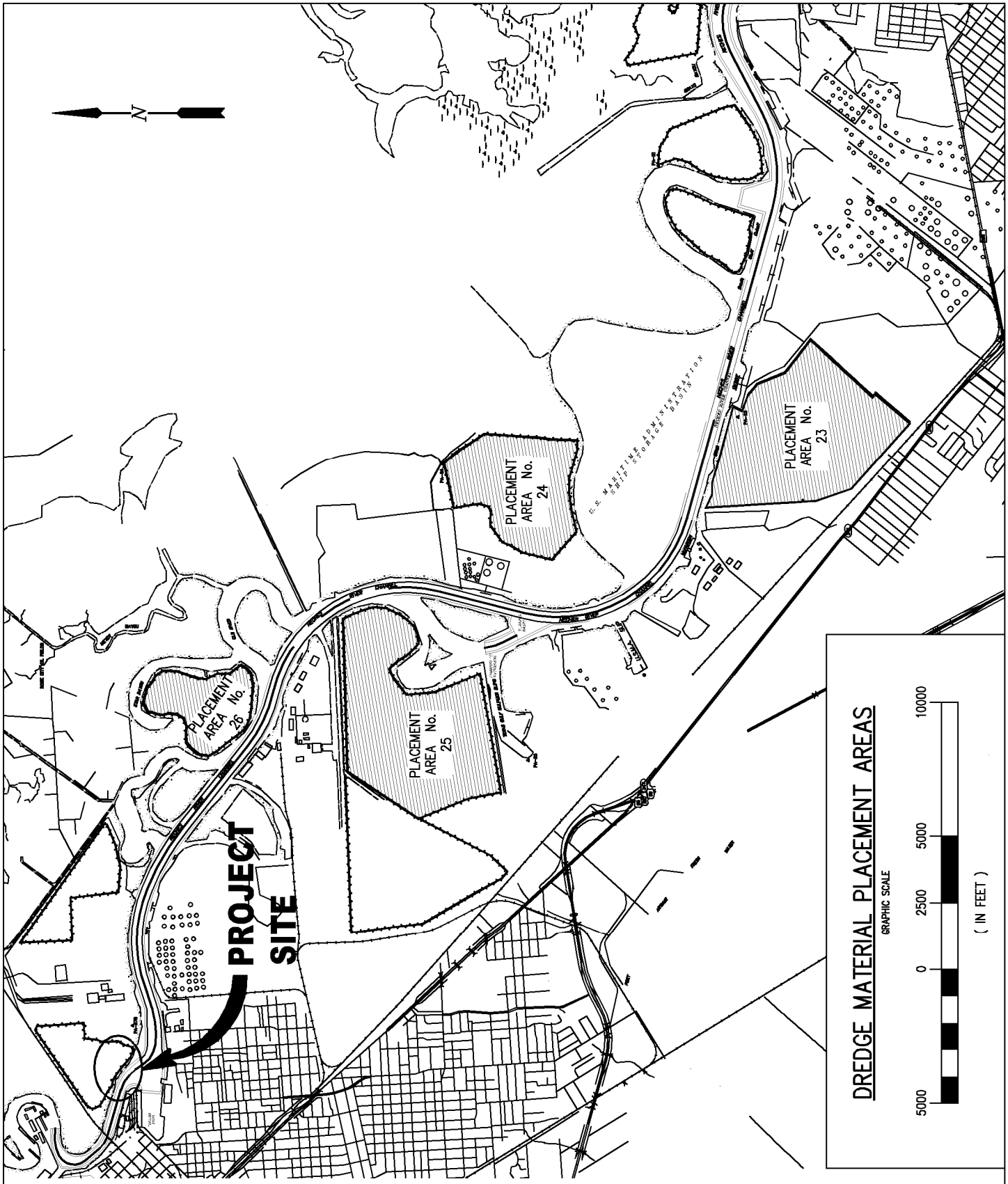

LAT: 30°04'41"N
LONG: 94°04'45"W

10568-CP20

LANIER & ASSOCIATES
CONSULTING ENGINEERS
INCORPORATED
FIRM F-2981
NEW ORLEANS, LA · BEAUMONT, TX

PORT OF BEAUMONT
BEAUMONT TEXAS

U.S.A.C.E. PERMIT MODIFICATIONS
PROPOSED NEW SHIP DOCKS
DREDGE PLACEMENT AREAS

DATE NOV.'17
DESIGN MJS
DRAWN SLB
CHECK DLC
CONTRACT10568
SHEET No.
20 OF 20